Industrial Power Tools

The world's premier productivity solutions

2008-2009

Atlas Copco

CONTENTS

PNEUMATIC ASSEMBLY TOOLS 11

Selection guide – pneumatic assembly tools ... 12
Tool key ... 14
Impact wrenches ... 17
Hydraulic impulse nutrunners – ErgoPulse ... 22
Monitoring impulse nutrunners – Pulsor ... 30
Pneumatic screwdrivers ... 33
Pneumatic nutrunners ... 44
Angle nutrunners ... 45
Straight nutrunners ... 57
Pistol grip nutrunners ... 62
Torque transducers and cables ... 68

ELECTRIC ASSEMBLY TOOLS AND SYSTEMS 69

Tool key ... 70
Industrial battery nutrunners/screwdrivers ... 74
Electric screwdrivers Eliza, EBL ... 79
Electric screwdrivers MicroTorque™ ... 82
Electric screwdrivers Tensor DL ... 85
Electric screwdrivers Tensor SL ... 86
Electric nutrunners Tensor DS ... 87
Electric nutrunners Tensor S ... 93
Electric nutrunners Tensor ST ... 100
Tensor DS / DL controller ... 106
Power Focus ... 107
Multiples by Express ETX / QMX ... 125
Power MACS 4000 ... 129
Bits and power sockets ... 145
Torque arms ... 152

QUALITY ASSURANCE IN TIGHTENING 161

ACTA 400 ... 162
ACTA 3000 ... 163
ToolsTalk ACTA ... 163
BLM 5000 ... 164
BLM Torque Supervisor ... 164
QRTT Transducers ... 165
IRTT Transducers ... 165
SRTT Transducers ... 166
MRTT Transducers ... 166
ACTA MT Transducer ... 168
BLM TPT, µ-Tester ... 170
BLM LABwrench ... 171
BLM LABwrench Gyro ... 172
BLM LINEwrench ... 173
BLM Joint Simulator Bench 3860 / 3890 ... 174

GRINDERS 175

Selection guide ... 176
Grinding at the right speed ... 178
Safety guidelines ... 179
Electric grinder – Brazor ... 180
Turbo grinders and sanders ... 182
Die grinders ... 186
Straight grinders ... 188
Vertical grinders ... 192
Angle grinders ... 196
Angle sanders ... 198
Orbital and random orbital sanders ... 200
Dust extraction ... 202
Routers ... 205
Nibbler ... 205
Circular cutters ... 206

PERCUSSIVE TOOLS 207

Safety guidelines ... 208
Chipping hammers – vibration-damped and silenced ... 209
Chipping hammers ... 210
Scalers ... 211
Needle scaler ... 213
Rust and weld scalers ... 214
Riveting systems ... 215
Riveting hammers – vibration-damped ... 216
Bucking bars – vibration-damped ... 218
Riveting hammers – conventional type ... 220
Chisels ... 221
Rammers ... 224

DRILLS 225

Selection guide ... 226
Pistol grip drills ... 227
Straight drills ... 228
Angle drills ... 231
Micro stop drills ... 235
Tappers ... 236
Screw-feed drills ... 238

AUTOMATIC DRILLING AND TAPPING UNITS 239

Automatic drilling and tapping units ... 240
Dimension sketches ... 244

AIRLINE ACCESSORIES 247

Installation guide ... 248
Safety guidelines ... 250
Ball valves ... 251
Air preparation units ... 252
Direct lubrication units ... 260
Quick couplings ... 262
Claw couplings ... 274
Fittings ... 275
Blow protector ... 277
Hoses ... 278
Spiral hoses ... 281
Blow guns ... 283
Balancers ... 284
Hose reels ... 286
Test equipment ... 289
Installation proposals ... 290

AIR MOTORS 299

Vane air motors ... 300
LZB vane air motors ... 301
LZL vane air motors ... 301
Air motor support ... 302

HOISTS AND TROLLEYS 303

Air hoists ... 304
Trolleys ... 305

SERVICE 307

DECLARATION OF NOISE & VIBRATION EMISSION 312

TOOL DESIGNATIONS 316

Whatever your business, we can add value

The global technology leader, Atlas Copco is a true solutions provider to the manufacturing industries of the world. You will find the high-tech tools, assembly systems and process software of the future in our range today. From big bolt fastening technology for offroad vehicles, down to "micro" tools for tiny fasteners in the electronics industry, Atlas Copco has the solutions you need to stay ahead of the game.

You talk, we listen

For us, listening is crucial. Whether you build vehicles, aircraft, appliances or electronics, your ongoing feedback gives us valuable insights into your business and the challenges you face to remain competitive. Our response? A continuous stream of innovations that raise productivity in your operation.

We lead, others follow

Atlas Copco leads the world for high-tech operator-friendly tools supported by advanced process control and quality assurance software. About 40% of our range of more than 3,000 tools have been launched during the past four years.

Lean production

In the automotive and other industries our high-performance, hand-operated and fixtured assembly tools and extensive know-how make a major contribution to lean production. Every third car in the Western world was built using our cutting edge fastening solutions.

Safety critical applications

On assembly lines in the manufacturing industries many joints are safety critical. Atlas Copco controlled fastening tools, fixtured solutions and market-leading assembly process software enable our customers to meet today's demands for joint validation, documentation and traceability.

Productivity starts with people

Atlas Copco continues to lead the field for ergonomically designed tools that minimize operator fatigue and increase individual productivity. Outstanding examples are our vibration-damped riveting systems, chosen by major aircraft manufacturers, and our turbo-powered grinders that have made heavy tasks lighter for tool operators in heavy metal fabrication operations.

Our commitment to your productivity is total

With resources in more than 90 countries, we can offer you a profitable partnership on a local or global basis. Atlas Copco product specialists, distributors and service engineers are on hand worldwide to share the responsibility for keeping your production on-line around the clock. We understand the challenges you face and our commitment to your productivity is total.

Customer Centers

Unique among competitors, Atlas Copco has Customer Centers throughout the world. Their common goal is to give you the best return on your investment. Once the tools are installed, our entire organization is dedicated to keeping your operation on-line.

Application centers

Our strategically located Application Centers configure complete assembly stations with process monitoring and control for the automotive, aerospace and other industries where joint quality is crucial. Using standard components we can deliver a complete tightening station for quality integrated fastening in just three weeks.

Whatever your language

We offer customer training and a wide range of training materials, including e-learning, interactive presentations and pocket guides in several languages. Operator and service instructions, supplied with all products, are available in 21 languages.

Order-driven production

At our tool plant, production is order driven and lead times are extremely short. Before leaving our factory every tool and system is rigorously tested. Quality control and test data are stored for each product.

Fast delivery

Place orders by phone or on-line. Orders received before 16:00 are packed and shipped the same day. European customers receive deliveries from our standard range within 24 to 48 hours from our worldwide distribution warehouse in Belgium. Deliveries to other continents take up to 72 hours.

Quality, every step of the way

Atlas Copco is a truly innovative company, continuously striving for excellence. Of the more than 3,000 tools in our range, about 40% have been launched during the past four years and we own more than 400 patents. Covering all our operations, we have a quality target: To attain maximum quality at all stages from initial development to spare part deliveries.

Proof of company excellence
The ISO 9001 Certificate confirms that Atlas Copco Tools product company conforms to the Quality Standard ISO 9001. Our quality policy is:

- To fulfill customers' expectations.
- To deliver problem-free products at the right time.
- To continuously improve our products, services and processes.
- To have motivated personnel with clearly defined goals.

In effect it means you know what you are getting. Carefully specified manufacturing processes guarantee that every product leaving our factory meets exactly the same standards of quality and performance.

EC declaration of conformity
From January 1, 1995, all machines produced by Atlas Copco conform with EC Machine Directive 98/37/EC which focuses on safety.
Each Atlas Copco tool bears the CE marking and is accompanied by detailed safety and operating instructions and a declaration of conformity.

Our obligations

- The manufacturer must ensure that the machine is designed in conformance with the standards laid down for the machine type in question.
- The machine must be accompanied by a declaration of conformity.
- The design project must be thoroughly documented.
- The sign affixed to the machine must contain the following basic information:
  - Name and address of manufacturer.
  - Product designation and technical data, defined in the relevant standard.
  - The CE marking.
  - Country and year of manufacture.
- The machine must be accompanied by safety and operating instructions warning of possible hazards when the machine is in use.

The instructions must also include a declaration of noise and vibration based on tests performed according to test codes such as EN standards or other recognized standards. The instructions must be written in all EC languages.

How we measure noise and vibration

When measuring noise, Atlas Copco uses the standard ISO 15744. To the measured level, 3 dB(A) can be added to incorporate variations in production and method. The figure given in this catalogue is the measured sound pressure level. If the measured value exceeds 85 dB(A), we also state the sound power level. The standards describs how to calculate this figure.

Vibration is measured using the test code ISO 8662 for pneumatic tools and EN 50144 or EN 60745 for electric tools. The vibration value stated consists of a measured value and a tolerance. The tolerance varies from machine to machine and is given in the instructions.

If the registered value is less than 2.5 m/s^2, we normally just state less than 2.5 m/s^2, because values less than 2.5 m/s^2 indicate minimal risk from vibration.

Environment

As a part of Atlas Copco´s environmental policy, Atlas Copco Tools and Assembly Systems product company has received the ISO 14001 certification. We continuously work with improvements such as:

- Energy efficiency in our production as well as in our products.
- Supplier evaluation from an environmental perspective.
- Reduction of hazardous substances both in our production and in our products.
- Information to our customers in the environmental area.
- Environmental awareness training of employees.

Five steps to zero-fault fastening

As joint fastening grows more complex, error-proofing becomes a key factor for the profitability of your operation. The later an assembly defect is identified, the more it costs to correct further down the line. At worst, it could reach the end customer and result in warranty claims and loss of goodwill. Leading the field for tightening process control, Atlas Copco has defined five steps towards zero-fault fastening.

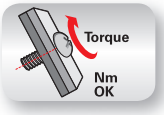

Step 1. To assure a correct tightening torque

The first step to zero fault production is obtained by using an assembly tool that delivers a precise and pre-determined torque. However, only the tightening torque is controlled at this first step, operators and work pieces are not yet involved in the monitoring process.

Step 2. To assure that all screws are tightened

One of the most common causes of a faulty assembly is the fact that the operator simply forgets to tighten a screw or makes a re-hit on an already tightened screw. The remedy against this possible error is to use an REcontroller. It monitors the tightening cycle and identifies a proper shut-off of a tool.

Read more in the guide "Error proofed production – five steps to achieve zero fault fastening".

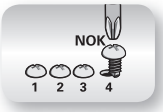

Step 3. To assure that the joint is correct

With step 1 and 2 the tool and the operator have been taken into consideration. However, the joint itself can also be a cause of the incorrect tightening. There can be several reasons for this. Missing parts like seals or washers will change the characteristics of the joint. Damaged threads or debris in the joint also lead to an improperly tightened joint.

The way to detect these types of faulty joints is to monitor the tightening angle during the tightening process.

Operator guidance and feedback is provided by signal lights on the tool and by using socket selectors etc.

Step 4. To assure that safety critical joints are tightened properly

This is the level required for safety critical joints. All tightening data is documented and can be retrieved for error analyses. Documented tightening data for safety critical fasteners are essential in order to avoid or limit recalls and warranty claims.

Step 5. To assure zero fault production

Having reached step 4 in the advance to zero fault production still leaves room for mistakes. With step 5 two further elements are introduced for fault-free production. One element is the introduction of part identification, the other is reject management. With step five the tool controllers are not only networked – they are also connected to the factory network. Information about the components is sent over the factory network. By identifying the components that are to be assembled, relevant information is transferred to the tool controller via the network. This safeguards both that the correct component is being assembled and that corresponding tightening parameters are chosen.

Your guide to the catalogue

Accessories included
Under this heading a specification is given for each type of tool and of the parts (nipples, keys, guards, etc.) supplied with the tool. Instructions and a list of spare parts are always included in the package.

Optional accessories
Here you will find the specifications for most of the accessories. They are dependent on the job the tool is to be used for and have to be ordered separately.

Air consumption
The air consumption of the tools is stated in litres per second, l/s, and relates to free air, i.e., the compressed air expanded to atmospheric pressure. Unless otherwise stated, the figures are valid at a working pressure of 6.3 bar and indicate the maximum air consumption.

Maximum air consumption is valid for the tool without a speed governor when idling, i.e., when the tool is running at no load. A tool with a speed governor, has the maximum air consumption at the maximum power output.

Speed
The tool speeds are indicated in revolutions per minute, r/min, and indicate the idling speed, i.e., the speed at which the tool runs at no load and at a working pressure of 6.3 bar, if not otherwise specified. The speed at max. output is 50% of the idling speed for tools without a speed governor and 80 – 90% of the idling speed for tools with a speed governor.

Selected service kits to order
Under this heading, service kits for the most frequent service jobs done on the tool in question are listed.

Vibrations
Vibrations are not only unpleasant for the operator, but in the long term can also cause vibration disorders.

We consider ourselves the leaders in the industry with regard to our efforts and dedication to reducing vibration emission from our products. Vibration emission is influenced by factors beyond our control such as poor maintenance, pirate parts, unbalanced grinding wheels, etc.

We are therefore unable to guarantee that the use of our tools will never cause vibration disorders.

If you choose our tools, you still need to monitor your workforce. Therefore, even if you choose our tools, you still need to monitor your workforce. The vibration values indicated in this catalogue are measured in accordance with ISO 8662 for pneumatic tools and EN 50144 or EN 60745 for electric tools. This standard offers guidance on how to conduct laboratory measurements. To be able to make comparisons, the standard has been developed to give reproducible results.

Sound level
Most values indicated in this catalogue are measured in accordance with the Pneurop test code. From 2002 the official test code for sound measurements is changed to ISO 15744. The differences between the two standards are however minor, and are in most cases negligible. When we state that a sound level is low we relate this to competitors´ similar tools. We do not imply that extended use of our tools will never cause hearing impairment. Particularly since in many applications the sound from the process is higher than the unloaded tool noise. It is therefore always advisable to wear hearing protection.

Length

1 in	=	0.0254 m
1 m	=	39.3701 in / 3.2808 ft
1 mm	=	0.0393701 in

Weight

1 lb	=	0.4536 kg
1 kg	=	2.2046 lb

Torque

1 kpm	=	9.8067 Nm
1 Ft lb	=	1.3558 Nm

Torque

1 In lb	=	0.1130 Nm
1 Nm	=	0.1020 kpm
		0.7376 ft lb

Pressure

1 bar	=	100 kPa
1 kp/cm² (at)	=	98.0665 kPa
1 psi	=	6.8948 kPa
1 kPa	=	0.0101972 kp/cm² (at)

Power

1 kpm/s	=	9.8067 W
1 hp	=	745.7 W
		101.972 kpm/s
1 kW	=	1.3410 hp

Flow

1 m³/min	=	16.6667 l/s
1 cfm	=	0.4720 l/s
1 m³/h	=	0.2778 l/s
1 l/s	=	2.1189 cfm

Pneumatic assembly tools

Get it together fast and accurate!

With ergonomically designed screwdrivers, pulse tools, nutrunners and impact wrenches from Atlas Copco. Correct grip diameters reduce reaction forces, vibration and noise levels. High power-to-weight ratios ensure maximum operator comfort.

Contents **Page**

Selection guide – assembly tools 12
Basic tightening technique.....13
Tool key 14
Selection guide – Impact wrenches.....16
Impact wrenches 17
Hydraulic impulse nutrunners – ErgoPulse 22
Selection guide – ErgoPulse 24, 27
Monitoring impulse nutrunner – Pulsor.....30
Pneumatic screwdrivers 33
Selection guide – Pneumatic screwdrivers.....34
Pneumatic nutrunners 44
Angle nutrunners 45
Straight nutrunners.....57
Pistol grip nutrunners.....62
Torque transducers and cables 68

PNEUMATIC ASSEMBLY TOOLS

Selection guide

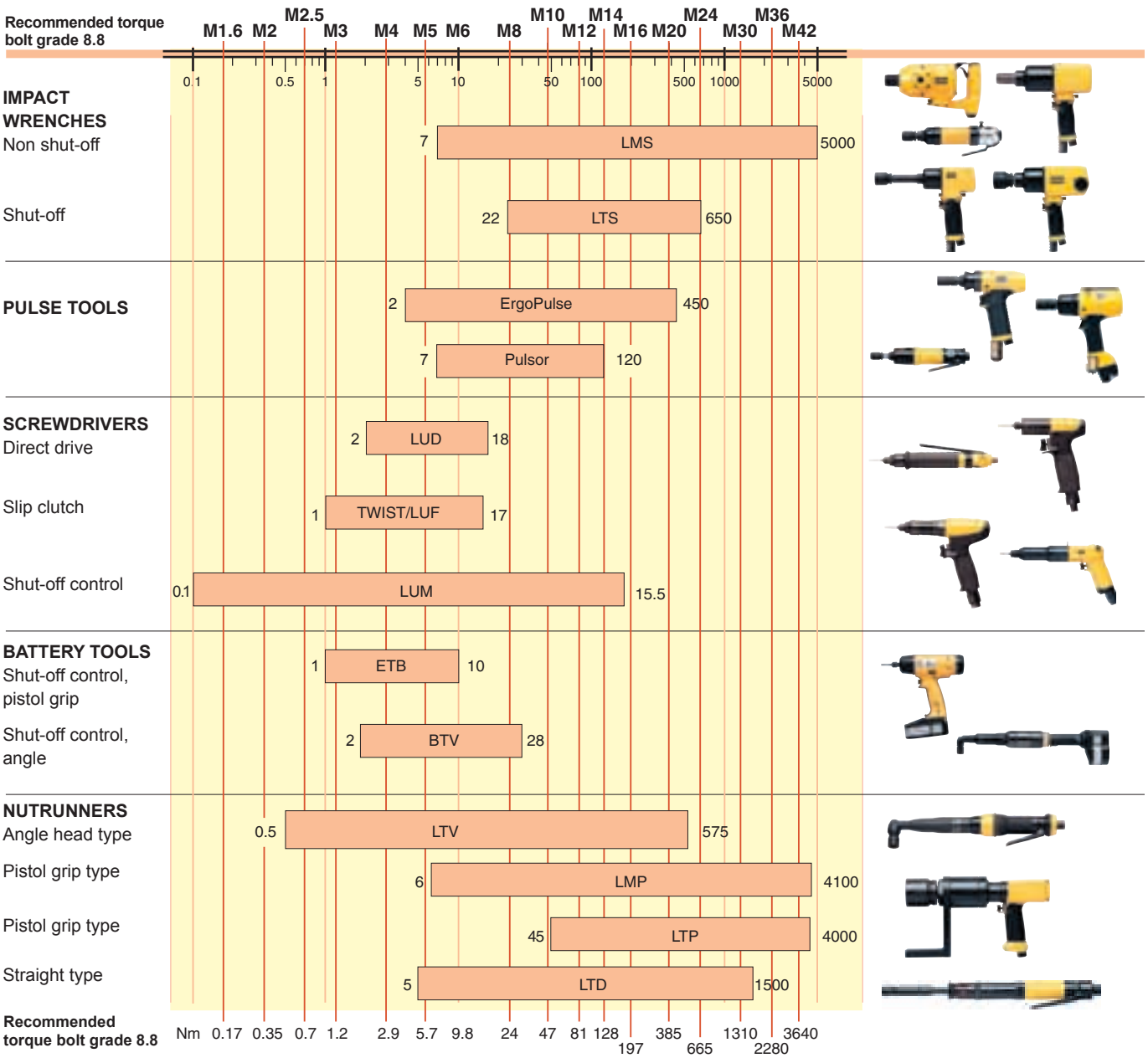

IMPACT WRENCHES (LMS, LTS)

Impact wrenches are suitable for general assembly and repair jobs when a powerful and lightweight tool is required. They are the best tools for loosening joints.

Atlas Copco LMS and LTS reversible impact wrenches can handle tough tightening and loosening jobs quickly, with minimum operator fatigue. The LMS non shut-off range is designed for all-purpose tightening with high availability. To cut tightening times, independent of operator influence, the LTS models should be used.

IMPULSE TOOLS (ErgoPulse)

Suitable both for general assembly and serial production. They have the same advantages as impact wrenches with higher accuracy. In addition you will have a tool with good ergonomics which means lower sound levels and less vibrations. Pulse tools also have a longer service life.

MONITORING IMPULSE TOOLS (Pulsor)

The Pulsor tool with its monitoring system is offering the same advantages as the normal pulse tools but is further developed with advanced error proofing functionality. The system consists of a tool, cable and monitoring unit.

SCREWDRIVERS

The biggest range on the market when it comes to extremely accurate screwdrivers with ergonomic design. All models are lubrication-free.

For all kinds of jobs involving smaller screw sizes, up to M6.

Shut-off control (LUM, ETB)

Best practice in most cases, especially for machine screws and screws in plastic. Very high accuracy and lowest bit consumption.

Slip clutch (TWIST/ LUF)

Best for sheet metal screws, wood screws or self-tapping screws.

Direct drive (LUD/LUF HRD)

The low cost alternative for wood and self-drilling screws.

NUTRUNNERS

Angle type (LTV)

Suitable for high volume serial production.

Extremely good accuracy, small angle head, suitable for use where space is limited. Low sound and vibration levels.

Pistol grip type (LMP, LTP)

An outstanding tool for fast and extremely accurate assembly. A low weight alternative with extremely high torque capacity and low sound level.

TORQUE RECOMMENDATIONS

The torque is important to ensure the required clamping force. These tables show the recommended torque for the most common types of screws and bolts.

SCREWS

Recommended max tightening torque (Nm) for untreated oil-smeared screws (friction coefficient = 0.125).

Metric coarse thread. The torque corresponds to approximately 62% of tensile stress.

M-THREADED SCREWS/BOLTS

Tightening torque Nm, according to ISO 898/1

	Bolt grade						
Thread	3.6	4.6	4.8	5.8	8.8	10.9	12.9
M1.6	0.05	0.065	0.086	0.11	0.17	0.24	0.29
M2	0.10	0.13	0.17	0.22	0.35	0.49	0.58
M2.2	0.13	0.17	0.23	0.29	0.46	0.64	0.77
M2.5	0.20	0.26	0.35	0.44	0.70	0.98	1.20
M3	0.35	0.46	0.61	0.77	1.20	1.70	2.10
M3.5	0.55	0.73	0.97	1.20	1.90	2.70	3.30
M4	0.81	1.10	1.40	1.80	2.90	4.00	4.90
M5	0.60	2.20	2.95	3.60	5.70	8.10	9.70
M6	2.80	3.70	4.90	6.10	9.80	14.0	17.0
M8		8.90	10.50	15.0	24.0	33.0	40.0
M10		17.0	21.0	29.0	47.0	65.0	79.0
M12		30.0	36.0	51.0	81.0	114.0	136.0

	Bolt grade					
Thread	4.6	4.8	5.8	8.8	10.9	12.9
M14	48	58	80	128	181	217
M16	74	88	123	197	277	333
M18	103	121	172	275	386	463
M20	144	170	240	385	541	649
M22	194	230	324	518	728	874
M24	249	295	416	665	935	1120
M27	360	435	600	961	1350	1620
M30	492	590	819	1310	1840	2210
M36	855	1030	1420	2280	3210	3850
M42	1360		2270	3640	5110	6140
M45	1690		2820	4510	6340	7610
M48	2040		3400	5450	7660	9190

Basic tightening technique

The material

The material is decisive for the choice of which type of screw and fastening tools you should choose. The most common materials are steel, aluminium, plastic, wood and various types of construction material. Different materials withstand different clamping forces. The clamping force is the force that holds the joint together and assures its function. Clamping force is attained in practice by transmitting a specific torque. Out of the total torque applied in tightening, roughly 10% is consumed for clamping force, while the remaining 90% is used in overcoming the friction.

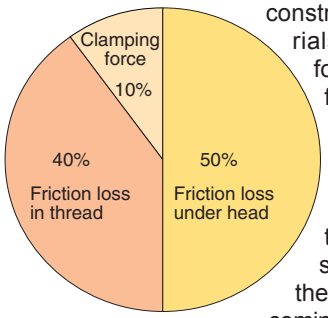

The friction

To assure the best possible results you should endeavour to achieve uniform quality and friction in the joint. This means that you must consider the dimensions of predrilled and punched holes, threads, washers etc. If there is too much variation in the dimensions, and thus in the friction, this could be very costly.

The screw/bolt

In most constructions the screw is the weakest link in the joint. If anything happens, it is usually cheaper to replace screws. There are exceptions, however, such as when materials like sheet metal and plastic are involved, when the screw is the strongest link. Replacement of parts with defective threads can be expensive. For such applications, it is therefore very important to work with a tool that has an accurate clutch.

Hard and soft joints

A joint is usually classified as either hard or soft. A hard joint is tightened to full torque through a tightening angle of roughly 30° after the screw has reached snug level. In a soft joint, the screw sometimes has to be tightened more than two complete turns before the full torque is achieved. The same tools often give different torque values on hard and soft joints respectively. This difference in torque values is generally known as “mean shift”.

For more information please contact Atlas Copco.

By measuring the torque from a series of tightening operations on the same joint, a measure is obtained of how accurately the tool can repeat a tightening. This is known as the scatter of the tool.

For more information about test procedure, see ISO 5393.

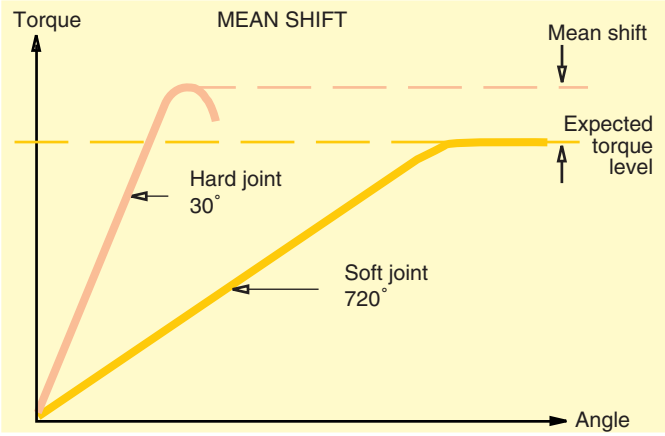

The scatter is small for a high quality tool, and wide for a low quality tool

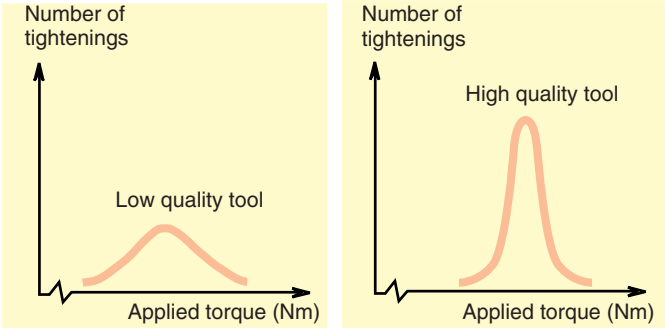

GENERAL

Performance figures for all pneumatic assembly tools are at a working pressure of 6.3 bar.

PNEUMATIC ASSEMBLY TOOLS
Tool key

The tool key below explains the significance of the letters/numbers forming the name of the tool model.

Impact wrenches

LMS = Non shut-off
LTS = Shut-off

For heavy duty use

LMS 06 HR 10 HD

Tool size

HR = Pistol grip, reversible
SR = Straight, reversible
GIR = Rear grip, inside trigger
GOR = Rear grip, outside trigger
GR = Rear grip

Square drive size
6 = 1/4"
10 = 3/8"
13 = 1/2"
20 = 3/4"
25 = 1"
38 = 1 1/2"
42 = 1/4" female hex, quick change chuck
43 = 7/16" female hex, quick change chuck

Hydraulic impulse nutrunners

Pulse tool | Tool size | Max torque

HR = Pistol grip, reversible
SR = Straight, reversible
HRF = Pistol grip, reversible, air-on-top
HRX = Pistol grip, reversible, forward handle

EP 8 PTS 55 HR 10 RE — Signal port

C = Single bladed pulse unit
X = Double bladed pulse unit
XS = Double or triple bladed pulse unit, extra strong
PT = Piston rollers, shut-off
PTS = Piston rollers, shut-off, extra strong
PTX = Piston rollers, shut-off, strong and light

Square drive size
10 = 3/8"
13 = 1/2"
20 = 3/4"
42 = 1/4" female hex, quick change chuck
43 = 7/16" female hex, quick change chuck

Monitoring impulse nutrunners

EPP – ErgoPulse PULSOR | M – PULSOR Monitoring

Square drive size / bit connector
10 = 3/8" square drive
13 = 1/2" square drive
20 = 3/4" square drive
42 = 1/4" female hex, quick change chuck
43 = 7/16" female hex, quick change chuck

EPP 8 M 55 HR 10

Tool size
6 / 8 / 10 / 11

Torque (Nm)
55 – Max torque

HR – Pistol grip
SR – Straight

Pneumatic screwdrivers

LUM 22 HRX 6 -P

Torque control
LUM = Shut-off clutch
TWIST/LUF = Slip clutch
LUD/COMBI = Direct drive
LTV = Shut-off angle tool

HRF = 3-way air inlet with balanced grip
HRX = Balanced pistol grip
HR = Pistol grip
PR = Straight tool with push start
SR = Straight tool with lever start
R = Reversible angle tool

P = Push start
RE = Reporting signal
Special rpm models
42 = 1/4" female hex, quick change chuck
I0 = 3/8" female hex
6 = 1/4" male hex
Q = 1/4" quick change chuck

Tool size
12 – LUM, TWIST, LUD
22 – LUM, TWIST, LUD
009 – LTV

Torque (Nm)

Pneumatic nutrunners

L T V 2 8 X R 29 10 Options

L = Pneumatic

T = Shut-off
B, M = Stall

Motor size

Generation

R, SR = Reversible
N, S = Non reversible
HR = Reversible (pistol grip)
H = Non reversible (pistol grip)

V = Right angle
D = In-line
P = Pistol grip
C = Crowfoot
O = Tube nut
R = Ratchet
K = Worm-drive

X = High speed option

Speed
001 = 100 rpm
002 = 200 rpm
etc.
or
Torque
10 = 10 Nm
15 = 15 Nm
etc.

RE = Signal port
FS = Flush socket
HAD = Hold-and-drive
TS = Built-in transducer/signal lights etc.
AS = Angle encoder/signal lights

Square drive size
6 = 1/4"
8 = 5/8"
10 = 3/8"
12, 13 = 1/2"
19, 20 = 3/4"
25 = 1"
38 = 1 1/2"
42 = 1/4" female hex
Q = 1/4" quick chuck

IMPACT WRENCHES

Selection guide

Atlas Copco´s powerful, high-speed impact wrenches are designed to cut production times by providing fast run-down and quick tightening.

Impact wrenches build up torque in joints through a series of rotary impacts. The torque obtained depends on:

- Air pressure.
- Tightening time on the actual joint.

These factors should be considered when choosing an impact wrench.

As a general rule, if a wrench impacts longer than 5 seconds on a fastener, a larger wrench should be used or a shorter life will result.

This guide will assist you in recommending an impact wrench for a specific application.

	M6	M8	M10	M12	M14	M16	M18	M20	M22	M24	M27	M30	M36	M42	M45	M48
Nm	**9.8**	**24**	**47**	**81**	**128**	**197**	**275**	**385**	**518**	**665**	**961**	**1310**	**2280**	**3640**	**4510**	**5450**
LMS	LMS06	LMS17	LMS17	LMS27	LMS37	LMS37	LMS47	LMS57	LMS57	LMS61	LMS61	LMS64	LMS86	LMS86	LMS86	LMS86
8.8	LMS06	LMS17	LMS27	LMS37	LMS37	LMS47	LMS57	LMS57	LMS57	LMS64	LMS64	LMS64	LMS86			
LTS		LTS17	LTS17	LTS27	LTS27	LTS37	LTS57	LTS57	LTS57							
		LTS17	LTS17	LTS37	LTS37	LTS37	LTS57	LTS57								

	M6	M8	M10	M12	M14	M16	M18	M20	M22	M24	M27	M30	M36	M42	M45
Nm	**14**	**33**	**65**	**114**	**181**	**277**	**386**	**541**	**728**	**935**	**1350**	**1840**	**3210**	**5110**	**6340**
LMS	LMS06	LMS17	LMS27	LMS27	LMS37	LMS37	LMS47	LMS57	LMS61	LMS61	LMS64	LMS86	LMS86	LMS86	LMS86
10.9	LMS17	LMS17	LMS27	LMS37	LMS47	LMS47	LMS57	LMS61	LMS64	LMS64	LMS86				
LTS		LTS17	LTS17	LTS27	LTS37	LTS57	LTS57	LTS57							
		LTS17	LTS27	LTS37	LTS37	LTS57	LTS57								

	M6	M8	M10	M12	M14	M16	M18	M20	M22	M24	M27	M30	M36	M42
Nm	17	40	79	136	217	333	463	649	874	1120	1620	2210	3850	6140
LMS	LMS06	LMS17	LMS27	LMS27	LMS37	LMS47	LMS57	LMS61	LMS61	LMS64	LMS86	LMS86	LMS86	LMS86
12.9	LMS17	LMS17	LMS27	LMS37	LMS47	LMS57	LMS61	LMS64	LMS64	LMS86				
LTS		LTS17	LTS17	LTS27	LTS37	LTS57	LTS57							
		LTS17	LTS27	LTS37	LTS37	LTS57	LTS57							

■ = **HEAVY DUTY**

■ = **EXTRA HEAVY DUTY**

The torque figures are normal tightening torque for untreated oil-smeared and rust-protected bolts and nuts in the most common strength grades. The torque figures correspond to approximately 63% of tensile stress.

IMPACT WRENCHES

Non shut-off type – Reversible

LMS06 – LMS37

Atlas Copco series of impact wrenches are designed for the toughest conditions. They are built to provide the ultimate in dependability and a long, trouble-free service life. There is nothing that matches the Atlas Copco impact wrench when it comes to flexibility, capacity-to-weight ratio and simplicity in use and maintenance.

- Fast tightening and disassembly.
- Wide torque range (7-480 Nm).
- Low weight.
- Negligible reaction force.
- Soft-start throttle.
- LMS06 – LMS27 are lubrication-free.

LMS Operating Range

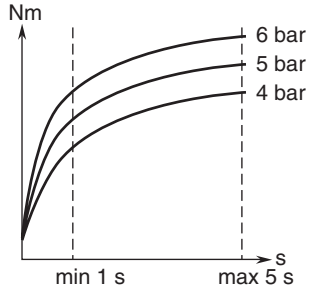

The tightening time should not exceed 5 seconds, to avoid excess wear of the tool.

Model	Bolt size mm	Square drive in	Torque range Nm	Torque range ft lb	Max torque Nm	Max torque ft lb	Impacts per min	Free speed r/min	Weight kg	Weight lb	Length excl anvil mm	CS distance mm	Air consumption under load l/s	Air consumption under load cfm	Rec. hose size mm	Air inlet thread in	Ordering No.
LMS06 SR10	6-8	3/8	7- 30	5 - 22	55	40	2100	12500	0.9	2.0	182	20	4	8	6.3	1/4	8434 1060 12
LMS06 HR10	6-8	3/8	7- 30	5 - 22	55	40	2100	13500	0.9	2.0	184	20	4	8	6.3	1/4	8434 1060 04*
LMS06 HR10-HD	6-8	3/8	7- 30	5 - 22	55	40	2100	10000	0.9	2.0	184	20	4	8	6.3	1/4	8434 1060 08
LMS06 HR42	6-8	1/4[a]	7- 30	5 - 22	55	40	2100	13500	0.9	2.0	184	20	4	8	6.3	1/4	8434 1060 20
LMS06 HR42-HD	6-8	1/4[a]	7- 30	5 - 22	55	40	2100	10000	0.9	2.0	184	20	4	8	6.3	1/4	8434 1060 16
LMS17 HR10	10	3/8	10- 70	7 - 52	110	81	1260	10000	1.7	3.8	141	24	10	21	10.0	3/8	8434 1170 60
LMS17 HR13	10	1/2	10- 70	7 - 52	110	81	1260	10000	1.7	3.8	141	24	10	21	10.0	3/8	8434 1170 29
LMS27 HR13	12	1/2	30 - 180	22 - 133	220	162	1200	8700	2.1	4.6	142	29	10	21	10.0	3/8	8434 1270 02*
LMS27 HR43	12	7/16[a]	30 - 180	22 - 133	220	162	1200	8700	2.1	4.6	142	29	10	21	10.0	3/8	8434 1270 77
LMS37 HR13	14-16	1/2	40 - 340	30 - 251	480	354	1200	7800	2.7	6.0	165	33	13	27	10.0	3/8	8434 1360 41*
LMS37 HR16	14-16	5/8	40 - 340	30 - 251	480	354	1200	7800	2.7	6.0	165	33	13	27	10.0	3/8	8434 1370 01

[a] Female hex. quick change chuck.

HD = Suitable for soft joints.

* Basic tools of the range, cover most needs.

ACCESSORIES INCLUDED

Silenced air exhaust through handle
Hose fitting

OPTIONAL ACCESSORIES

Page 20-21

SELECTED SERVICE KITS

Page 21

IMPACT WRENCHES

Non shut-off type – Reversible

LMS47 – LMS86

These tools provide enormous power, yet you are in full control, and there is virtually no reaction force during tightening. The torque is applied to the joint, not your wrist. All Atlas Copco impact wrenches have a wide torque range, so each tool can be adjusted to handle many applications.

- Fast tightening and disassembly.
- Wide torque range (70-10 000 Nm).
- Low weight.
- Negligible reaction force.
- Soft-start throttle.

Model	Bolt size mm	Square drive in	Torque range Nm	Torque range ft lb	Max torque Nm	Max torque ft lb	Impacts per min	Free speed r/min	Weight kg	Weight lb	Length excl anvil mm	CS distance mm	Air consumption under load l/s	Air consumption under load cfm	Rec. hose size mm	Air inlet thread in	Ordering No.
LMS47 HR20	16-19	3/4	70- 460	52- 339	550	405	900	4800	3.5	7.7	170	37	14	30	12.5	3/8	8434 1470 42
LMS57 HR20	18-20	3/4	100- 500	74- 369	900	664	960	4500	4.3	9.5	189	38	16	34	12.5	3/8	8434 1570 09*
LMS57 HR25	18-22	1	100- 650	74- 479	900	664	960	4500	4.3	9.5	189	38	16	34	12.5	3/8	8434 1570 41
LMS61 HR20	20-24	3/4	300-1300	220- 960	1800	1327	900	4000	5.1	11.2	212	44	12	25	12.5	3/8	8434 1611 00
LMS61 HR25	20-24	1	300-1300	220- 960	1800	1327	900	4000	5.1	11.2	212	44	12	25	12.5	3/8	8434 1610 00
LMS61 HRS4	20-24	1 1/4[b]	300-1300	220- 960	1800	1327	900	4000	5.1	11.2	212	44	12	25	12.5	3/8	8434 1612 00
LMS64 HR25	24-32	1	400-1400	295-1030	2300	1696	600	3100	9.0	20.0	195	57	21	44	12.5	1/2	8434 1640 03
LMS64 GR25	24-32	1	400-1400	295-1030	2300	1696	600	3100	9.0	20.0	280	57	21	44	12.5	1/2	8434 1641 02*
LMS64 S GR25	24-32	1	400-1500	295-1100	2300	1696	620	3380	9.0	20.0	280	57	35	73	12.5	1/2	8434 1641 06
LMS64 GRS5	24-32	1 5/8[a]	400-1400	295-1030	2300	1696	600	3100	9.0	20.0	280	57	21	44	12.5	1/2	8434 1641 44
LMS64 S GRS5	24-32	1 5/8[a]	400-1500	295-1100	2300	1696	620	3380	9.0	20.0	280	57	35	73	12.5	1/2	8434 1641 08
LMS86 GOR38/B	32-45	1 1/2	1000-5000	737-3688	10000	7375	450	3720	16.4	36.0	376	63	29	61	16.0	1/2	8434 1860 12
LMS86 GIR38/B	32-45	1 1/2	1000-5000	737-3688	10000	7375	450	3720	16.4	36.0	376	63	29	61	16.0	1/2	8434 1860 20*
LMS86 GORS5/B	32-45	1 5/8[a]	1000-5000	737-3688	10000	7375	450	3720	16.4	36.0	376	63	29	61	16.0	1/2	8434 1860 18
LMS86 GIRS5/B	32-45	1 5/8[a]	1000-5000	737-3688	10000	7375	450	3720	16.4	36.0	376	63	29	61	16.0	1/2	8434 1860 26

[a] Spline drive No. 5.
[b] Spline drive No. 4.
GOR = Outside trigger.
GR/GIR = Inside trigger.

* Basic tools of the range, cover most needs.

ACCESSORIES INCLUDED
Silenced air exhaust through handle (LMS47/57/61)
Hose fitting

OPTIONAL ACCESSORIES
Page 20-21

SELECTED SERVICE KITS
Page 21

IMPACT WRENCHES

Shut-off type – Torsion bar principle

LTS17 – LTS27

Equipped with automatic shut-off, the LTS models provide a perfect result, every time. This means proper tightening with less risk for over-tightening due to operator influence, improving joint quality as well as operator confidence.

- Automatic shut-off shortens tightening time.
- Consistent torque accuracy.
- No over-torquing.
- Low weight.
- Adjustable torque settings (22-165 Nm).

LTS17 and LTS27 are lubrication-free.
The purpose of the torsion bar principle is to increase the bounce angle of the impact mechanism. The tool shuts off once it has reached the pre-set bounce angle.

LTS Adjustment Range

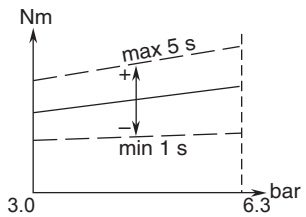

The tightening time should not exceed 5 seconds, to avoid excess wear of the tool.

Model	Bolt size mm	Square drive in	Torque range Nm	Torque range ft lb	Impacts per min	Free speed r/min	Weight kg	Weight lb	Length excl anvil mm	CS distance mm	Air consumption under load l/s	Air consumption under load cfm	Rec. hose size mm	Air inlet thread in	Sound level dB(A)	Ordering No.
LTS17 HR10	8-10	3/8	22[b]- 45	16- 33	960	10000	2.0	4.4	214	24	6	13	8	3/8	80	8434 1172 19
LTS17 HR13	8-10	1/2	34[b]- 66	25- 49	1100	10000	2.0	4.4	214	24	6	13	8	3/8	80	8434 1172 01*
LTS27 HR13-1	10-12	1/2	50[b]-110	37- 82	960	9300	2.6	5.7	226	29	6	13	10	3/8	82	8434 1272 00
LTS27 HR13-2	12-14	1/2	70[b]-140	52-104	1100	9300	2.6	5.7	226	29	8	17	10	3/8	82	8434 1272 18
LTS27 HR43	10-14	7/16[a]	40[b]-165	29-123	1200	11500	2.5	5.5	164	29	8	17	10	3/8	82	8434 1272 59*

[a] Female hex. quick change chuck – 1/2" square drive on torsion bar.
[b] Min torque at 3 bar air pressure and min setting of torque control mechanism.
* Basic tools of the range, cover most needs.

ACCESSORIES INCLUDED

Silenced air exhaust through handle
Hose fitting
Torsion bar No. 06 — LTS27 HR43
Adjusting key — LTS17 and LTS27

LTS17 and -27 torsion bar – bounce angle shut-off

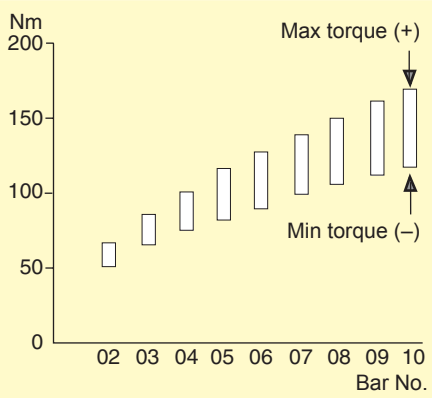

LTS27 HR43

Female hexagon quick-change chuck for separate torsion bars with 1/2" square drive. The design is specially suitable for the tightening of different bolt sizes at the same work place.

LTS17, -27 HR13 (10) built-in torsion bar

The anvil of the impact mechanism is extended with a built-in torsion bar to increase accuracy and reduce vibration level. These types are designed for frequent tightening of the same bolt size.

Torsion bar No.	Torque Nm	Ordering No.	Colour of bar
02	60	4250 1230 82	orange
03	75	4250 1230 83	yellow
04	90	4250 1230 84	green
05	100	4250 1230 85	blue
06	115	4250 1230 86	red (standard)
07	125	4250 1230 87	orange
08	140	4250 1230 88	yellow
09	150	4250 1230 89	green
10	165	4250 1230 90	blue

Valid at 6 bar air pressure

IMPACT WRENCHES

Shut-off type – Added bounce energy principle

LTS37 – LTS57

LTS shut-off tools automatically shut off when the preset torque is reached, eliminating the need for guesswork. Place the tool on the joint to be fastened and press the trigger. The tool will automatically shut-off at a predetermined torque level, which provides for an operator independent tightening.

- Automatic shut-off shortens tightening time.
- Consistent torque accuracy.
- No over-torquing.
- Low weight.
- Adjustable torque settings (80-650 Nm).

The purpose of the added bounce energy principle is that the energy content of each impact is added to the next and following impact until the preset level is reached and the tool shuts off.

Model	Bolt size mm	Square drive in	Torque range Nm	Torque range ft lb	Impacts per min	Free speed r/min	Weight kg	Weight lb	Length excl anvil mm	CS distance mm	Air consumption under load l/s	Air consumption under load cfm	Rec. hose size mm	Air inlet thread in	Sound level dB(A)	Ordering No.
LTS37 HR13	12-14	1/2	80[a]-340	59-250	1140	8800	3.7	8.1	200	33	10	21	10	3/8	85	8434 1372 41*
LTS37 HR16	12-16	5/8	120[a]-340	88-250	1140	8800	3.7	8.1	220	33	10	21	10	3/8	85	8434 1372 09
LTS57 HR20	18-20	3/4	200[a]-500	147-369	960	4600	5.3	12.0	225	38	13	27	10	3/8	85	8434 1571 08
LTS57 HR25	18-22	1	200[a]-650	147-479	960	4600	5.3	12.0	225	38	13	27	10	3/8	85	8434 1571 40*

[a] Min torque at 4 bar air pressure and min setting of torque control mechanism.

* Basic tools of the range, cover most needs.

OPTIONAL ACCESSORIES

Extended anvils

Model	Dimensions Drive size in	Dimensions Extension mm	Ordering No.
Extended square drive anvil for			
LMS17	1/2	75	4250 1147 80[ab]
LMS27	1/2	75	4250 1085 80[ab]
LMS27	1/2	150	4250 1086 80[ab]
LMS37/LTS37	1/2	75	4250 1031 80[ab]
LMS37/LTS37	1/2	150	4250 1032 80[ab]
LMS37/LTS37	5/8	75	4250 1034 80[ab]
LMS37/LTS37	5/8	150	4250 1035 80[ab]
LMS47/LTS47	3/4	75	4250 1208 00
LMS47/LTS47	3/4	150	4250 1209 00
LMS57/LTS57	3/4	75	4250 1109 00
LMS57/LTS57	3/4	150	4250 1110 00
LMS57/LTS57	3/4	200	4250 1111 00
LMS57/LTS57	1	75	4250 1113 00
LMS57/LTS57	1	150	4250 1114 00
LMS64	1	80	4250 0774 00
LMS64	1	160	4250 0775 00
Spline type anvil for			
LMS64	1 5/8-14	–	4250 0967 80
Heavy duty anvil (thru hole) for			
LMS37/LTS37	1/2	80	4250 1041 01

Quick change chuck

Model	Dimensions Drive size in	Dimensions Extension mm	Ordering No.
Anvil with female hexagon quick change chuck for			
LMS06	1/4	–	4250 1513 80
LMS17	7/16	–	4250 1154 80
LMS27	7/16	–	4250 1088 80
LMS37	7/16	–	4250 1050 80[c]

	Ordering No.
[a] Retainer pin – locking type	4250 0851 00
[b] Retainer pin – quick change type	4250 1190 00

[c] **NOTE**: To be used together with reversing valve 4250 1345 95 (marked "1") only.

Socket holders

Model	Drive size in	Length mm	Ordering No.
Tool holder with square drive, for 7/16" quick change chuck, for			
LMS17, -27	3/8	75	4023 1210 03
	1/2	75	4023 1211 03

SELECTED SERVICE KITS
Page 21

IMPACT WRENCHES
Accessories

Suspension yokes

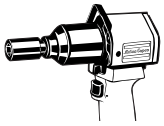

Model	Ordering No.		
	Horizontal	Vertical	Swivelling
LMS06 HR	–	–	4210 0243 00
LMS17	–	–	4250 1365 00
LMS27	4250 0872 00	4250 1159 00	–
LMS37	4250 0872 00	4250 1058 00	–
LMS47	4250 0872 00	4250 1327 00	–
LMS57	4250 0872 00	4250 1160 00	–
LMS61	4250 0872 00	4250 1620 90	–
LMS64	4250 0677 80	–	–
LMS86	0371 1102 00	–	–
LTS17	–	–	4250 1365 00
LTS27	4250 0872 00	–	4250 1365 00
LTS37	4250 0872 00	–	4250 1253 00
LTS57	4250 0872 00	–	4250 2229 00

Protective covers

Model	Ordering No.
LMS17	4250 1503 00
LMS27	4250 1273 00
LMS37	4250 1213 00
LMS47	4250 1338 00
LMS57	4250 1282 00
LMS61	4250 2464 00
LMS64	4250 0828 00
LTS17	4250 1410 00
LTS27 HR13	4250 1411 00
LTS27 HR43	4250 1340 00
LTS37	4250 1337 00
LTS57	4250 1339 00

Power regulators

Model	Ordering No.
Power regulator valve for	
LMS17/LTS17	4250 1091 90
LMS27/LTS27	4250 1091 91
LMS37/LTS37	4250 1091 92
LMS47	4250 1091 93
LMS57/LTS57	4250 1091 94
LTS17	4250 1091 87
LTS27	4250 1091 86
LTS37	4250 1091 85
LTS57	4250 1091 88

Exhaust kit

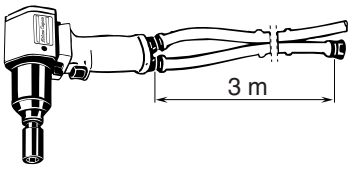

Model	Ordering No.
Piped-away exhaust kit for	
LMS06 HR	4210 2052 00
LMS17, -27, -37, -47, -57, LTS17, -27, -37, -57	4250 1366 90

SELECTED SERVICE KITS

The spare parts included in the service kits cover a normal overhaul of your tool. Always have them available for a fast and economical repair.

Main parts included:

- Vane kit
- Gaskets
- Circlips
- Motor bearings
- O-rings
- Pins etc.

Model	Service kit
LMS06	4081 0008 90
LMS06 SR	4081 0168 90
LMS17/LTS17	4081 0204 90
LMS27/LTS27	4081 0205 90
LMS37/LTS37	4081 0206 90
LMS47	4081 0207 90
LMS57/LTS57	4081 0208 90
LMS61	4081 0257 90
LMS64	4081 0015 90
LMS86	4081 0016 90

HYDRAULIC IMPULSE NUTRUNNERS

ErgoPulse

The successful combination of high productivity and a good working environment

- **Productivity** – Very high speed means short cycle times for hard to semi-soft joints.
- **Accuracy** – High torque independent of joint stiffness gives high joint quality.
- **Reliability** – Long service life with simple maintenance requirements.
- **Ergonomics**:
  - – Virtually no reaction forces.
  - – Low noise and vibration levels.
  - – Low weight.
  - – Lubrication-free.

The successful combination of high productivity and a good working environment

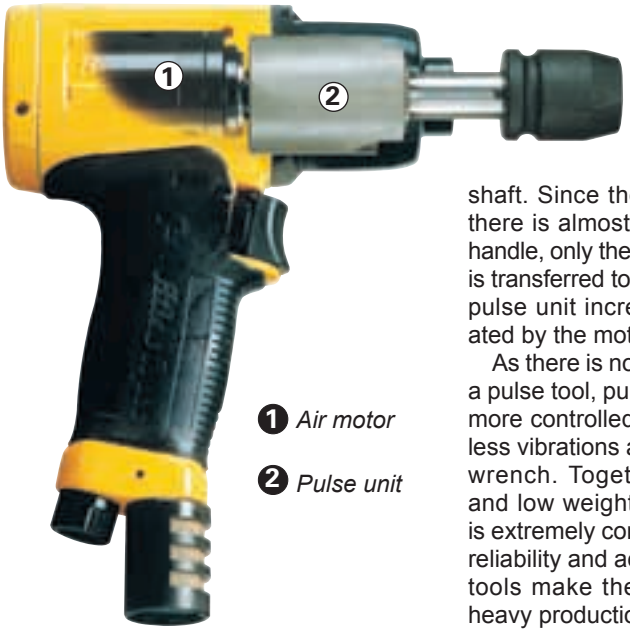

❶ *Air motor*

❷ *Pulse unit*

The ErgoPulse principle

The heart of a pulse tool is the hydraulic pulse unit, positioned between the air motor and the outgoing shaft. Since the pulses are very short, there is almost no reaction force in the handle, only the much lower motor torque is transferred to the operator's hand. The pulse unit increases the torque generated by the motor 50-100 times!

As there is no metal-to-metal impact in a pulse tool, pulse tools provide a softer, more controlled pulse with considerably less vibrations and noise than an impact wrench. Together with good balance and low weight the result is a tool that is extremely comfortable to operate. The reliability and accuracy of the ErgoPulse tools make them ideal for continuous heavy production.

A complete range

The ErgoPulse range covers torque from 2-450 Nm which means that you can tighten screws from M4 to M20.

ErgoPulse tools are available in both shut-off and non shut-off versions. The shut-off pulse tools – PT, PTS and PTX types – will shut-off the air supply as soon as the pre-set torque has been reached. With a shut-off tool the operator influence is minimized. The result is increased accuracy and faster tightening. The non shut-off tools – C and XS types – produce pulses until the operator releases the trigger. They are preferred in applications where it is an advantage for the operator to be able to control the process by shutting off the tool manually.

Atlas Copco pulse tools are available in straight and pistol grip versions.

HYDRAULIC IMPULSE NUTRUNNERS

ErgoPulse – Shut-off type

PT/PTS/PTX torque sensing shut-off system – an active part of the tightening process

The ErgoPulse PT, PTS and PTX nutrunners incorporate a shut-off system based on retardation instead of timers or bypass valves. Torque is “sensed” by means of a rotatable inertial mass acting against an adjustable spring. When the force of the mass is sufficient to overcome the preset force in the spring, a lock pin releases a disc valve to shut off the air supply. The result is a highly accurate and easily adjustable shut-off system.

A pulse mechanism with pistons for minimum weight and long service life

The ErgoPulse PT/PTS/PTX pulse unit features a more efficient transfer of the impulse energy. The design is based on cam-guided pistons and rollers and the pulse cylinder is oil-filled. The moving parts are thus completely immersed in oil, which ensures a long service life.

The unique piston principle makes the PT/PTS/PTX tools extremely light.

Twin chamber motor

The ErgoPulse PT, PTS and PTX nutrunners have a twin chamber vane motor. It is designed for giving high torque at low speed, which gives the best characteristics for fast, reliable and accurate tightening.

TRIM valve for enhanced performance on hard joints and at low torque levels

The PT, PTS and PTX tools incorporate a patented adjustable valve at the air outlet. This feature enhances the tool’s performance on hard joints and at low torque levels.

The PTS/PTX-RE tools are reporting as standard. This means that they supply an air signal that can be connected to a RE-Controller to count the number of tightenings and to detect premature shut-off and rehits.

AUTOTRIM valve, the optimal solution for mixed hard and soft joints

The PTS/PTX-AT tools are equipped with an automatic two-stage Trim valve. The tool runs down the screw with reduced free speed. After 1-2 pulses it shifts automatically to full power thus enabling both hard and soft joints to be tightened with excellent result without any adjustments.

The PTS/PTX-AT tools can also be used for reporting applications.

PT, PTS and PTX pulse unit and shut-off system

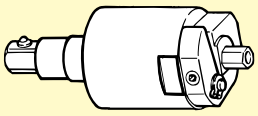

Twin piston mechanism

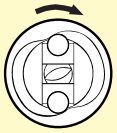

Twin chamber motor

Recommended operating area

Max recommended tightening time for a pulse tool is 3 seconds. Longer time indicates that the joint is too soft for the tool used. If so, it is recommended to choose a bigger size of tool or another type of nutrunner.

Minimum recommended number of pulses per tightening is 5. Fewer pulses will result in increased scatter. By reducing the free speed with the TRIM valve (PT/PTS/PTX) there will be more pulses per tightening and improved accuracy.

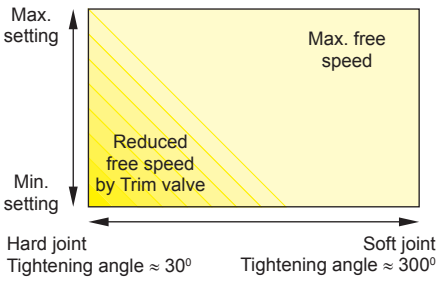

HYDRAULIC IMPULSE NUTRUNNERS

ErgoPulse – Shut-off type

Bolt capacity M5 – M20

- Safer joints and fewer after-checks.
- Fast and accurate tightening.
- Minimum operator fatigue.
- Independence of operator influence.

❶ *Twin chamber air motor.*

❷ *Pulse unit with cam-guided pistons and rollers.*

❸ *Patented shut-off system with inertia body.*

❹ *Silencer with TRIM or AUTOTRIM valve.*

ErgoPulse PTS/PTX

The PTS/PTX-RE tools are reporting as standard. You connect an air signal hose to the Trim valve. With the air signal hose connected to a monitoring instrument you can count the number of approved tightenings and detect premature shut-off, rehits and other irregularities.

ErgoPulse PTS/PTX AutoTrim

The PTS/PTX AutoTrim tools are equipped with an automatic two-stage Trim valve. The tool runs down the screw with reduced free speed. After 1-2 pulses it shifts automatically to full power thus enabling both hard and soft joints to be tightened with excellent result. Old PTS-RE tools can be retrofitted with AutoTrim valves by replacing the existing Trim valve, see page 26. The PTS/PTX-AT tools are reporting as standard.

ErgoPulse PTS-HRF

The Air on Top versions give you full flexibility, either you use the air inlet on top to avoid the disturbing hose hook or you use the conventional air inlet at the bottom of the handle. The Air on Top is ideal for work stations.

SELECTION GUIDE

The ErgoPulse PT, PTS and PTX tools can be adjusted within a wide torque range by simply setting the spring force that counteracts the inertia body. Torque should preferably be checked with a hand torque wrench. Electronic monitoring with an in-line transducer is possible but should be verified with a manual hand torque wrench to avoid measuring errors due to the extremely short pulse sequence.

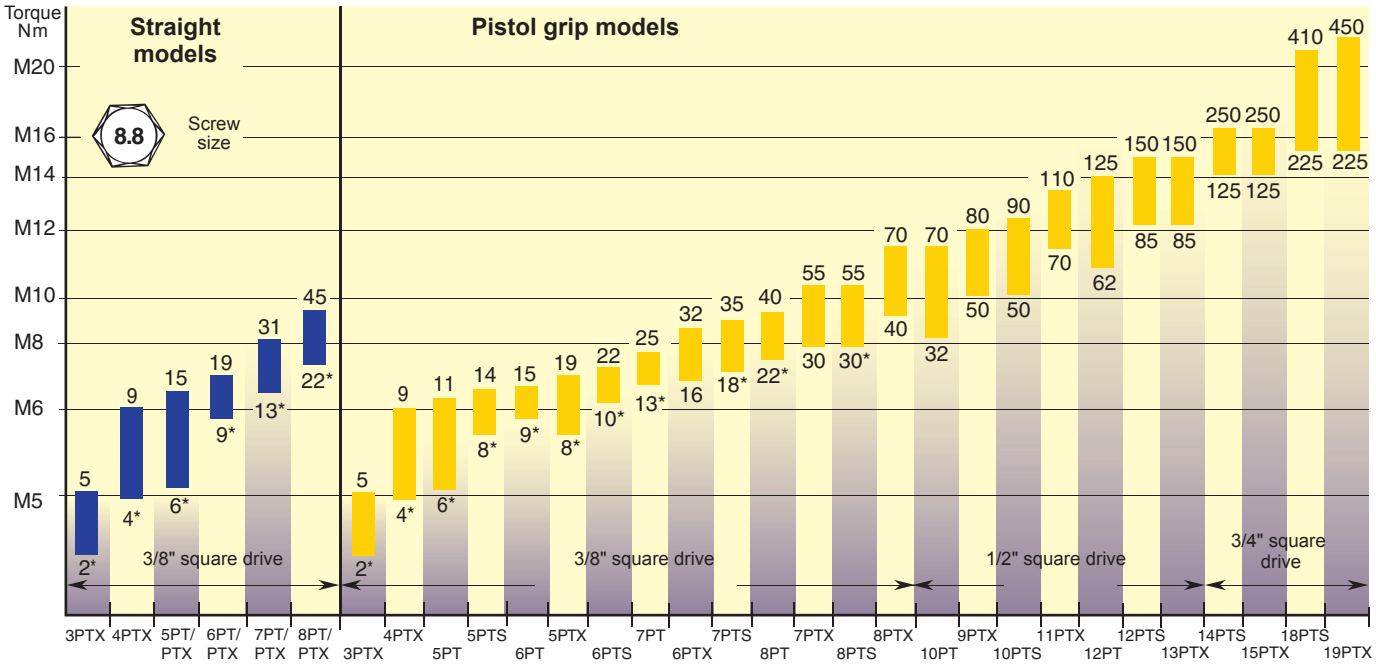

* *For tools with quick change chuck, see technical data.*

HYDRAULIC IMPULSE NUTRUNNERS

ErgoPulse – Shut-off type

ErgoPulse PTX

The new ErgoPulse PTX series is intended for applications where weight is critical. The PTX tools are based on the well-proven technology from ErgoPulse PTS. They are available in both Trim and AutoTrim versions. AutoTrim is recommended for applications where same tool is used both for hard and soft joints.

Model	Bolt size mm	Square drive in	Torque range[a] Nm	Torque range[a] ft lb	Free speed r/min	Weight kg	Weight lb	Length mm	CS distance mm	Air consumption under load l/s	Air consumption under load cfm	Rec. hose size mm	Air inlet thread in	Sound level dB(A)	Ordering No.
Trim Straight models															
EP3PTX5 SR42	M4-M5	1/4	2 - 5	1.6 - 4	4500[c]	0.73	1.6	202	21	4	13	8	1/4	76	8431 0376 01
EP4PTX9 SR42	M5	1/4[b]	4 - 9	3 - 7	3400[d]	0.9	2.0	207	21	4	13	8	1/4	74	8431 0376 00
EP4PTX9 SR10	M5	3/8	4 - 9	3 - 7	3400[d]	0.9	2.0	207	21	4	13	8	1/4	74	8431 0376 04
EP5PTX14 SR42	M6	1/4[b]	7 - 14	5 - 10	5300[d]	0.9	2.0	207	21	7	15	8	1/4	74	8431 0376 10
EP5PTX15 SR10	M6	3/8	9 - 15	7 - 11	5300[d]	0.9	2.0	207	21	7	15	8	1/4	74	8431 0376 14
EP6PTX18 SR42	M6	1/4[b]	9 - 18	7 - 13	6800[d]	0.9	2.0	207	21	7	15	8	1/4	74	8431 0376 20
EP6PTX19 SR10	M6	3/8	10 - 19	7 - 14	6800[d]	0.9	2.0	207	21	7	15	8	1/4	74	8431 0376 24
EP7PTX28 SR42	M6-M8	1/4[b]	17 - 28	13 - 21	4300[d]	1.2	2.5	235	25	8	17	10	1/4	78	8431 0376 30
EP7PTX31 SR10	M6-M8	3/8	18 - 31	13 - 23	4300[d]	1.2	2.5	235	25	8	17	10	1/4	78	8431 0376 34
EP8PTX38 SR42	M8	1/4[b]	22 - 38	16 - 28	5500[d]	1.2	2.5	235	25	9	19	10	1/4	78	8431 0376 44
EP8PTX45 SR10	M8	3/8	24 - 45	18 - 33	5500[d]	1.2	2.5	235	25	9	19	10	1/4	78	8431 0376 40
Trim-RE Pistol grip (RE-signal)															
EP3PTX5 HR42-RE	M4-M5	1/4	2 - 5	1.6 - 4	5000[c]	0.77	1.7	154	21	4	13	8	1/4	76	8431 0375 51
EP4PTX9 HR42-RE	M5	1/4[b]	4 - 9	3 - 7	3400[d]	0.9	1.9	164	22	4	13	8	1/4	75	8431 0375 50
EP4PTX9 HR10-RE	M5	3/8	4 - 9	3 - 7	3400[d]	0.9	1.9	164	22	4	13	8	1/4	75	8431 0375 54
EP5PTX17 HR42-RE	M6	1/4[b]	7 - 17	5 - 13	7000[d]	0.9	1.9	164	22	7	15	8	1/4	80	8431 0375 00
EP5PTX19 HR10-RE	M6	3/8	8 - 19	6 - 14	7000[d]	0.9	1.9	164	22	7	15	8	1/4	80	8431 0375 04
EP6PTX28 HR42-RE	M6-M8	1/4[b]	15 - 28	11 - 21	8500[d]	0.9	1.9	164	22	7	15	8	1/4	81	8431 0375 10
EP6PTX32 HR10-RE	M6-M8	3/8	16 - 32	12 - 23	8500[d]	0.9	1.9	164	22	7	15	8	1/4	81	8431 0375 20
EP7PTX55 HR10-RE	M8-M10	3/8	30 - 55	22 - 40	7200[d]	1.2	2.5	176	25	9	19	10	1/4	81	8431 0375 30
EP8PTX70 HR10-RE	M10	3/8	40 - 70	29 - 51	6900[d]	1.2	2.5	176	25	9	19	10	1/4	81	8431 0375 60
EP9PTX80 HR13-RE	M10	1/2	50 - 80	37 - 59	5200[d]	1.5	3.3	188	29	11	23	10	1/4	82	8431 0375 40
EP11PTX120 HR13-RE	M12	1/2	70 - 110	51 - 88	5100[d]	1.7	3.8	196	29	12	25	10	1/4	83	8431 0376 50
EP13PTX150 HR13-RE	M12-M14	1/2	85 - 150	63 - 110	5300[d]	2.3	5.1	197	33.5	15	32	13	3/8	86	8431 0376 60
EP15PTX250 HR20-RE	M12-M16	3/4	125 - 250	92 - 184	4300[d]	3.1	6.8	216	36.5	21	45	13	3/8	86	8431 0376 70
EP19PTX450 HR20-RE	M16-M20	3/4	225 - 450	166 - 332	3300[d]	4.2	9.2	221	44	23	49	13	3/8	90	8431 0376 80
AutoTrim Straight models (RE-signal)															
EP3PTX5 SR42-AT	M4-M5	1/4	2 - 5	1.6 - 4	4500[c]	0.79	1.7	262	21	4	13	8	1/4	76	8431 0376 03
EP4PTX9 SR42-AT	M5	1/4[b]	4 - 9	3 - 7	3300[c]	0.9	2.0	267	21	4	13	8	1/4	74	8431 0376 02
EP4PTX9 SR10-AT	M5	3/8	4 - 9	3 - 7	3300[c]	0.9	2.0	267	21	4	13	8	1/4	74	8431 0376 06
EP5PTX14 SR42-AT	M6	1/4[b]	7 - 14	5 - 10	4800[c]	0.9	2.0	267	21	7	15	8	1/4	74	8431 0376 12
EP5PTX15 SR10-AT	M6	3/8	9 - 15	7 - 11	4800[c]	0.9	2.0	267	21	7	15	8	1/4	74	8431 0376 16
EP6PTX18 SR42-AT	M6	1/4[b]	9 - 18	7 - 13	6700[c]	0.9	2.0	267	21	7	15	8	1/4	74	8431 0376 22
EP6PTX19 SR10-AT	M6	3/8	10 - 19	7 - 14	6700[c]	0.9	2.0	267	21	7	15	8	1/4	74	8431 0376 26
EP7PTX28 SR42-AT	M6-M8	1/4[b]	17 - 28	13 - 21	4300[c]	1.2	2.5	295	25	7	15	10	1/4	78	8431 0376 32
EP7PTX31 SR10-AT	M6-M8	3/8	18 - 31	13 - 23	4300[c]	1.2	2.5	295	25	7	15	10	1/4	78	8431 0376 36
EP8PTX38 SR42-AT	M8	1/4[b]	22 - 38	16 - 28	5900[c]	1.2	2.5	295	25	9	19	10	1/4	78	8431 0376 46
EP8PTX45 SR10-AT	M8	3/8	24 - 45	18 - 33	5900[c]	1.2	2.5	295	25	9	19	10	1/4	78	8431 0376 42
AutoTrim Pistol grip (RE-signal)															
EP3PTX5 HR42-AT	M4-M5	1/4	2 - 5	1.6 - 4	4500[c]	0.80	1.8	154	21	4	13	8	1/4	76	8431 0375 53
EP4PTX9 HR42-AT	M5	1/4[b]	4 - 9	3 - 7	3300[c]	0.9	2.0	164	22	4	13	8	1/4	75	8431 0375 52
EP4PTX9 HR10-AT	M5	3/8	4 - 9	3 - 7	3300[c]	0.9	2.0	164	22	4	13	8	1/4	75	8431 0375 56
EP5PTX17 HR42-AT	M6	1/4[b]	7 - 17	5 - 13	5400[c]	0.9	2.0	164	22	7	15	8	1/4	80	8431 0375 02
EP5PTX19 HR10-AT	M6	3/8	8 - 19	6 - 14	5400[c]	0.9	2.0	164	22	7	15	8	1/4	80	8431 0375 06
EP6PTX28 HR42-AT	M6-M8	1/4[b]	15 - 28	11 - 21	8500[c]	0.9	2.0	164	22	7	15	8	1/4	81	8431 0375 12
EP6PTX32 HR10-AT	M6-M8	3/8	16 - 32	12 - 23	8500[c]	0.9	2.0	164	22	7	15	8	1/4	81	8431 0375 22
EP7PTX55 HR10-AT	M8-M10	3/8	30 - 55	22 - 40	6900[c]	1.2	2.5	176	25	9	19	10	1/4	81	8431 0375 32
EP8PTX70 HR10-AT	M10	3/8	40 - 70	29 - 51	6900[c]	1.2	2.5	176	25	9	19	10	1/4	81	8431 0375 62
EP9PTX80 HR13-AT	M10	1/2	50 - 80	37 - 59	5100[c]	1.5	3.4	188	29	11	23	10	1/4	82	8431 0375 42
EP11PTX120 HR13-AT	M12	1/2	70 - 110	51 - 88	5100[c]	1.7	3.8	196	29	12	25	10	1/4	83	8431 0376 52
EP13PTX150 HR13-AT	M12-M14	1/2	85 - 150	63 - 110	5300[c]	2.3	5.0	197	33.5	15	32	13	3/8	86	8431 0376 62
EP15PTX250 HR20-AT	M12-M16	3/4	125 - 250	92 - 184	4200[c]	3.1	6.8	216	36.5	21	45	13	3/8	86	8431 0376 72
EP19PTX450 HR20-AT	M16-M20	3/4	225 - 450	166 - 332	3300[c]	4.2	9.2	221	44	23	49	13	3/8	90	8431 0376 82

[a] To be used as a guide only, final torque depends on type of joint, accessories used and air pressure.

[b] Female hexagon drive. Quick change chuck.

[c] In full speed mode.

[d] With TRIM valve fully open.

HYDRAULIC IMPULSE NUTRUNNERS

ErgoPulse – Shut-off type

PT/PTS models

Model	Bolt size mm	Square drive in	Torque range[a] Nm	Torque range[a] ft lb	Free speed r/min	Weight kg	Weight lb	Length mm	CS distance mm	Air consumption under load l/s	Air consumption under load cfm	Rec. hose size mm	Air inlet thread in	Sound level dB(A)	Ordering No.
Pistol grip models															
EP5PT HR42	M6	1/4[b]	5 - 10	4 - 7	5500[c]	0.95	2.1	205	21	6	13	8	1/4	74	8431 0368 05
EP5PT HR10	M6	3/8	6 - 11	4 - 8	5500[c]	0.95	2.1	200	21	6	13	8	1/4	74	8431 0368 04
EP6PT HR42	M6	1/4[b]	8 - 14	6 - 10	6000[c]	1.0	2.2	205	21	6	13	8	1/4	74	8431 0368 23
EP6PT HR10	M6	3/8	9 - 15	7 - 11	6000[c]	1.0	2.2	200	21	6	13	8	1/4	74	8431 0368 16
EP7PT HR42	M8	1/4[b]	12 - 23	9 - 17	4500[c]	1.3	2.9	175	26	7	15	8	1/4	77	8431 0368 36
EP7PT HR10	M8	3/8	13 - 25	10 - 18	4500[c]	1.3	2.9	177	26	7	15	8	1/4	77	8431 0368 30
EP8PT HR42	M8	1/4[b]	20 - 35	15 - 26	6000[c]	1.4	3.0	175	26	8	17	8	1/4	77	8431 0367 94
EP8PT HR10	M8	3/8	22 - 40	16 - 29	6000[c]	1.4	3.0	177	26	8	17	8	1/4	77	8431 0367 85
EP10PT HR13	M10	1/2	32 - 70	24 - 51	4000[c]	1.8	4.0	192	29	10	21	10	1/4	81	8431 0367 66
EP12PT HR13	M12	1/2	62 - 125	46 - 92	3500[c]	2.4	5.3	201	34	12	25	10	1/4	81	8431 0368 40
TRIM-RE															
Pistol grip models															
EP5PTS12 HR42-RE[d]	M5-M6	1/4[b]	6 - 12	4 - 9	5400[c]	1.0	2.2	196	21	6.5	14	8	1/4	74	8431 0374 05
EP5PTS14 HR10-RE[d]	M5-M6	3/8	8 - 14	6 - 10	5400[c]	1.0	2.2	191	21	6.5	14	8	1/4	74	8431 0374 00
EP6PTS20 HR42-RE[d]	M6	1/4[b]	8 - 20	6 - 15	7300[c]	1.0	2.2	196	21	7	15	8	1/4	74	8431 0374 15
EP6PTS22 HR10-RE[d]	M6	3/8	10 - 22	7 - 16	7300[c]	1.0	2.2	191	21	7	15	8	1/4	74	8431 0374 20
Pistol grip models. Balanced grip															
EP7PTS30 HR42-RE[d]	M8	1/4[b]	16 - 31	12 - 23	5700[c]	1.4	3.0	175	26	8	17	10	1/4	77	8431 0374 35
EP7PTS35 HR10-RE[d]	M8	3/8	18 - 35	13 - 26	5700[c]	1.4	3.0	176	26	8	17	10	1/4	77	8431 0374 40
EP8PTS40 HR42-RE[d]	M8	1/4[b]	22 - 40	16 - 29	7300[c]	1.4	3.0	175	26	9	19	10	1/4	77	8431 0374 55
EP8PTS55 HR10-RE[d]	M8-M10	3/8	30 - 55	22 - 40	7300[c]	1.4	3.0	176	26	9	19	10	1/4	77	8431 0374 60
EP10PTS90 HR13-RE[d]	M10-M12	1/2	50 - 90	37 - 66	5200[c]	1.8	4.0	193	29	11	23	10	1/4	83	8431 0374 80
EP12PTS150 HR13-RE[d]	M12-M14	1/2	85 - 150	63 - 110	4200[c]	2.5	5.5	201	34	13	27	13	3/8	83	8431 0374 90
EP14PTS250 HR20-RE[d]	M12-M16	3/4	125 - 250	92 - 185	4000[c]	3.3	7.2	216	37	20	42	13	3/8	82	8431 0374 95
EP18PTS410 HR20-RE[d]	M16-M20	3/4	225 - 410	166 - 302	3000[c]	4.3	9.5	202	42	22	46	13	3/8	85	8431 0374 98
Pistol grip. Air on top models															
EP7PTS35 HRF10-RE	M8	3/8	18 - 35	13 - 26	5700[c]	1.4	3.0	176	31	8	17	10	1/4	77	8431 0374 41
EP8PTS55 HRF10-RE	M8-M10	3/8	30 - 55	22 - 40	7300[c]	1.4	3.0	176	31	9	19	10	1/4	77	8431 0374 61
EP10PTS90 HRF13-RE	M10-M12	1/2	50 - 90	37 - 66	5200[c]	1.8	4.0	193	34	11	23	10	1/4	81	8431 0374 81
AUTOTRIM															
Pistol grip models															
EP6PTS20 HR42-AT	M6	1/4[b]	8 - 20	6 - 15	6300[e]	1.0	2.2	196	21	7	15	8	1/4	74	8431 0374 16
EP6PTS22 HR10-AT	M6	3/8	10 - 22	7 - 16	6300[e]	1.0	2.2	191	21	7	15	8	1/4	74	8431 0374 21
Pistol grip models. Balanced grip															
EP7PTS30 HR42-AT[d]	M8	1/4[b]	16 - 31	12 - 23	5400[e]	1.4	3.0	175	26	8	17	10	1/4	77	8431 0374 37
EP7PTS35 HR10-AT[d]	M8	3/8	18 - 35	13 - 26	5400[e]	1.4	3.0	176	26	8	17	10	1/4	77	8431 0374 42
EP8PTS40 HR42-AT[d]	M8	1/4[b]	22 - 40	16 - 29	6900[e]	1.4	3.0	175	26	9	19	10	1/4	77	8431 0374 57
EP8PTS55 HR10-AT[d]	M8-10	3/8	30 - 55	22 - 40	6900[e]	1.4	3.0	176	26	9	19	10	1/4	77	8431 0374 62
EP10PTS90 HR13-AT[d]	M10-12	1/2	50 - 90	37 - 66	4900[e]	1.8	4.0	193	29	11	23	10	1/4	83	8431 0374 82
EP12PTS150 HR13-AT[d]	M12-14	1/2	85 - 150	63 - 110	4100[e]	2.5	5.5	201	34	13	27	13	3/8	83	8431 0374 92
EP14PTS250 HR20-AT[d]	M12-16	3/4	125 - 250	92 - 185	3900[e]	3.3	7.2	216	37	20	42	13	3/8	82	8431 0374 97
EP18PTS410 HR20-AT[d]	M16-20	3/4	225 - 410	166 - 332	2900[e]	4.3	9.5	202	42	22	46	13	3/8	85	8431 0374 99
Pistol grip. Air on top models															
EP7PTS35 HRF10-AT	M8	3/8	18 - 35	13 - 26	5400[e]	1.4	3.0	176	31	8	17	10	1/4	77	8431 0374 43
EP8PTS55 HRF10-AT	M8-10	3/8	30 - 55	22 - 40	6900[e]	1.4	3.0	176	31	9	19	10	1/4	77	8431 0374 63
EP10PTS90 HRF13-AT	M10-12	1/2	50 - 90	37 - 66	4900[e]	1.8	4.0	193	34	11	23	10	1/4	81	8431 0374 83

[a] To be used as a guide only, final torque depends on type of joint, accessories used and air pressure.
[b] Female hexagon drive. Quick change chuck.
[c] With TRIM valve fully open.
[d] Approximate maximum torque included in designation.
[e] In full speed mode.

AUTOTRIM valves for ErgoPulse PTS/PTX-RE

Model	Ordering No.
EP5/6PTS/PTX	4250 1878 90
EP7/8PTS/PTX	4250 1878 91
EP10PTS/9PTX/11PTX	4250 1878 92
EP12PTS	4250 1878 93
EP14PTS/13PTX	4250 1878 94
EP15PTX	4250 2675 92
EP18PTS	4250 1878 95
EP19PTX	4250 2675 91

HYDRAULIC IMPULSE NUTRUNNERS

ErgoPulse – Non shut-off type

Bolt capacity M4 – M20

- Fast and accurate tightening.
- Low weight and small dimensions.

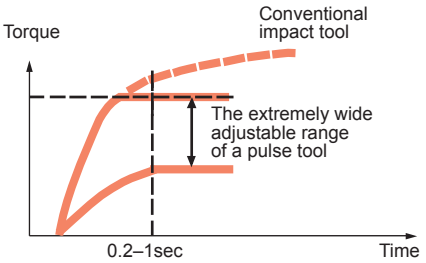

Twin chamber motor

The ErgoPulse XS nutrunners have a twin chamber vane motor. It is designed for giving high torque at low speed, which provides the best characteristics for fast, reliable and accurate tightening.

Pulse mechanisms with one, two or three blades

The ErgoPulse non shut-off tools are equipped with pulse units with one (C-tools), two (XS up to size 8) or three blades (XS from size 10). The double and triple blade pulse units use the Atlas Copco patented cam-guided design to push out the blades, giving a very high reliability. These pulse units have a high power-to-weight ratio, making the tools very powerful for their size.

Torque is adjusted by regulating an artificial leak in the hydraulic circuit, which gives possibilities for most accurate adjustment of the tightening torque of the tool.

ErgoPulse 6PS

This model is excellent for tightening self-tapping screws and when fast, powerful reversing is needed. Torque is adjusted by regulating the air pressure.

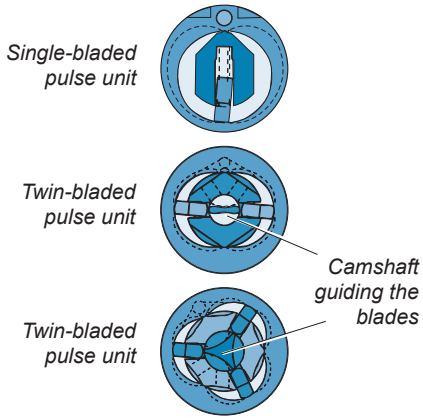

SELECTION GUIDE

The size of tool is determined on the basis of torque and/or bolt dimension. Torque should preferably be checked with a hand torque wrench. Electronic monitoring with an in-line transducer is possible but should be verified with a manual hand torque wrench to avoid measuring errors due to the extremely short pulse sequence.

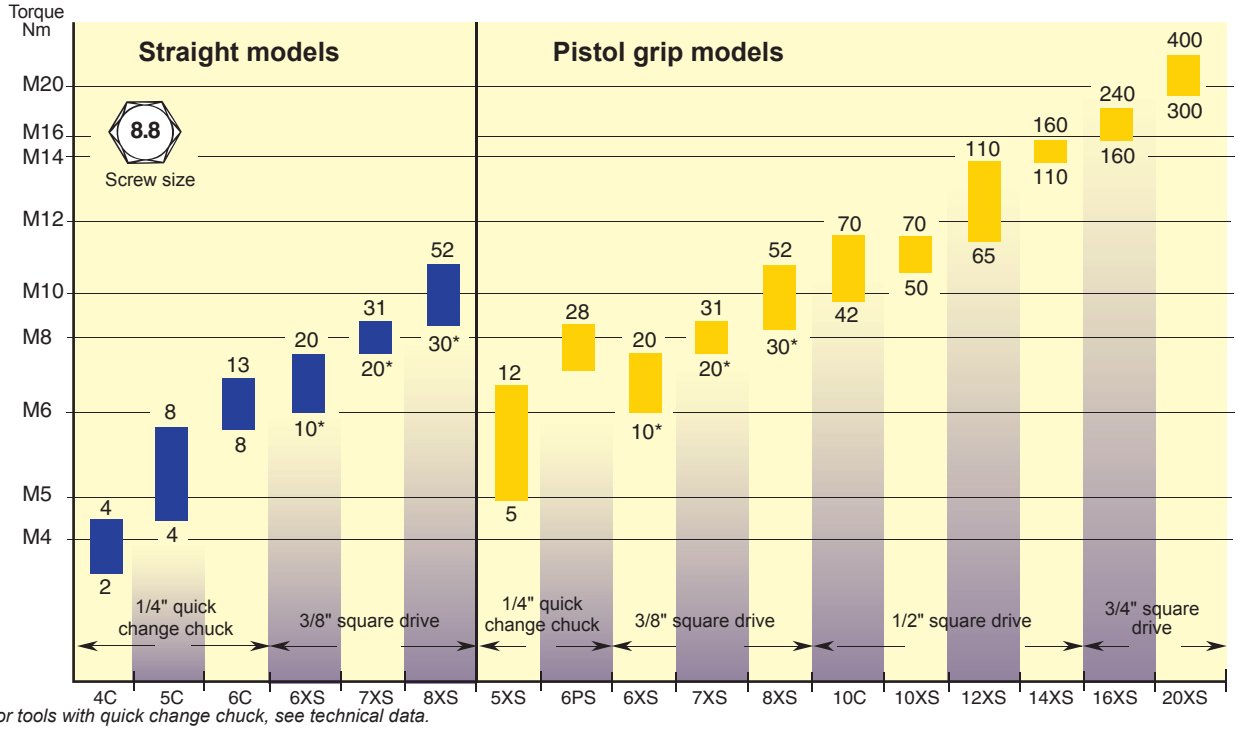

* *For tools with quick change chuck, see technical data.*

HYDRAULIC IMPULSE NUTRUNNERS

ErgoPulse – Non shut-off type

Model	Bolt size mm	Square drive in	Torque range[a] Nm	Torque range[a] ft lb	Free speed r/min	Weight kg	Weight lb	Length mm	CS distance mm	Air consumption under load l/s	Air consumption under load cfm	Rec. hose size mm	Air inlet thread in	Sound level[b] dB(A)	Ordering No.
Air on top models															
EP5C HRF42	M5	1/4[c]	5- 9	4- 7	4800	1.1	2.4	201	25	6	13	8	1/4	70	8431 0260 23
EP6C HRF42	M6	1/4[c]	9- 16	7- 12	4800	1.2	2.6	226	25	6	13	8	1/4	70	8431 0260 30
EP8X HRF42	M8	1/4[c]	18- 30	13- 22	9000	1.2	2.6	184	25	6	13	8	1/4	70	8431 0360 97
EP8X HRF10	M8	3/8	20- 35	15- 26	9000	1.2	2.6	184	25	6	13	8	1/4	77	8431 0360 89
Straight models															
EP4C SR42	M4	1/4[c]	2- 4	1- 3	8200	0.8	1.8	255	19	2.5	5	6	1/4	70	8431 0350 02
EP5C SR42	M5	1/4[c]	4- 8	3- 6	10500	0.9	2.0	238	20	5	10	8	1/4	75	8431 0261 14
EP6C SR42	M6	1/4[c]	8- 13	6- 9	10500	1.0	2.2	263	20	5	10	8	1/4	75	8431 0261 22
EP6XS SR42	M6	1/4[c]	9- 19	6- 14	8000	0.7	1.5	219	22	8	17	8	1/4	75	8431 0372 27
EP6XS SR10	M6	3/8	10- 20	7- 15	8000	0.7	1.5	221	22	8	17	8	1/4	75	8431 0372 25
EP7XS SR42	M8	1/4[c]	17- 28	13- 21	10000	0.7	1.5	219	22	8	17	8	1/4	75	8431 0372 15
EP7XS SR10	M8	3/8	20- 31	15- 23	10000	0.7	1.5	221	22	8	17	8	1/4	75	8431 0372 05
EP8XS SR42	M8	1/4[c]	22- 40	16- 29	8000	0.9	2.0	242	24	9	19	8	1/4	78	8431 0369 30
EP8XS SR10	M8-M10	3/8	30- 52	22- 38	8000	0.9	2.0	244	24	9	19	8	1/4	78	8431 0369 20
Pistol grip models															
EP5C HR42	M5	1/4[c]	5- 9	4- 7	4800	1.0	2.2	225	22	6	13	8	1/4	70	8431 0260 15
EP5XS HR42	M5-M6	1/4[c]	5- 12	4- 9	8500	0.8	1.8	165	21	9	19	8	1/4	75	8431 0372 30
EP5CS HR42	M5-M6	1/4[c]	8- 16	6- 12	4800	1.0	2.2	225	22	6	13	8	1/4	70	8431 0260 17
EP6C HR42	M6	1/4[c]	9- 16	7- 12	4800	1.1	2.4	250	22	6	13	8	1/4	70	8431 0262 13
EP6XS HR42	M6	1/4[c]	9- 19	6- 14	8000	0.8	1.8	150	22	8	17	8	1/4	75	8431 0372 23
EP6XS HR10	M6	3/8	10- 20	7- 15	8000	0.8	1.8	152	22	8	17	8	1/4	75	8431 0372 20
EP6PS HR42	M8	1/4[c]	[d]- 28	[d]- 21	8000	0.8	1.8	148	21	9	19	10	1/4	74	8431 0368 22
EP6PS HR10	M8	3/8	[d]- 30	[d]- 22	8000	0.8	1.8	150	21	9	19	10	1/4	74	8431 0368 21
EP8PS HR10	M8-M10	3/8	[d]- 65	[d]- 48	8000	1.0	2.2	158	23	9	19	10	1/4	80	8431 0368 24
EP7XS HR42	M8	1/4[c]	17- 28	13- 21	9000	0.8	1.8	150	22	8	17	8	1/4	75	8431 0372 10
EP7XS HR10	M8	3/8	20- 31	15- 23	9000	0.8	1.8	152	22	8	17	8	1/4	75	8431 0372 00
EP8XS HRX42	M8	1/4[c]	22- 40	16- 29	7000	1.0	2.2	172	23	9	19	10	1/4	80	8431 0369 16
EP8XS HRX10	M8-M10	3/8	30- 52	22- 38	7000	1.0	2.2	174	23	9	19	10	1/4	80	8431 0369 09
EP10C HR13	M10	1/2	42- 70	31- 52	7500	2.0	4.4	163	27	7	15	8	1/4	79	8431 0365 01
EP10XS HR13	M10	1/2	50- 70	37- 52	6000	1.3	2.9	168	26	11	23	10	1/4	78	8431 0369 40
EP12XS HR13	M12	1/2	65- 110	48- 81	4500	1.6	3.5	178	29	12	25	10	1/4	79	8431 0371 00
EP14XS HR13	M14	1/2	110- 160	81- 118	3500	2.4	5.3	188	34	14	30	13	3/8	79	8431 0371 50
EP16XS HR20	M16	3/4	160- 240	118- 177	2800	3.3	7.3	205	37	15	32	13	3/8	81	8431 0371 55
EP20XS HR20	M20	3/4	300- 400	221- 295	3700	5.1	11.2	240	43	16	34	13	3/8	80	8431 0371 60

[a] To be used as a guide only, final torque depends on type of joint, accessories used and air pressure.

[b] When exhaust hose is used.

[c] Female hexagon drive. Quick change chuck.

[d] Torque is adjusted by regulating the air pressure.

SELECTED SERVICE KITS

The spare parts included in the service kits cover a normal overhaul of your tool. Always have them available for a fast and economical repair.

Main parts included:

- Vane kit
- Motor bearings
- Gaskets
- O-rings
- Circlips
- Pins etc.

Model	O-ring kit pulse unit	Service kit	Model	O-ring kit pulse unit	Service kit
EP5C/6C SR		4081 0110 90	EP9PTX HR	4250 2058 90	4081 0122 90
EP10C HR		4081 0115 90	EP11PTX HR	4250 2267 95	4081 0310 90
EP5XS	4210 2532 93	4081 0264 90	EP13PTX HR	4250 2267 92	4081 0226 90
EP6/7XS HR	4250 2084 90	4081 0188 90	EP15PTX HR	4250 2267 93	4081 0242 90
EP6/7XS SR	4250 2084 90	4081 0189 90	EP19PTX HR	4250 2267 94	4081 0256 90
EP6PS HR	4250 2058 91	4081 0274 90	EP5/6PT HR	4250 2058 90	4081 0122 90
EP8PS HR	4250 2059 90	4081 0120 90	EP5/6PT SR	4250 2058 90	4081 0123 90
EP8XS HR	4250 2085 90	4081 0119 90	EP7/8PT HR	4250 2059 90	4081 0120 90
EP8XS SR	4250 2085 90	4081 0190 90	EP7/8PT SR	4250 2059 90	4081 0198 90
EP10XS HR	4250 2086 90	4081 0191 90	EP10PT HR	4250 2060 90	4081 0124 90
EP12XS HR	4250 2087 90	4081 0192 90	EP12PT HR	4250 2061 90	4081 0125 90
EP14XS HR	4250 2170 90	4081 0200 90	EP5/6PTS HR	4250 2058 90	4081 0122 90
EP16XS HR	4250 2281 90	4081 0223 90	EP7/8PTS HR	4250 2267 91	4081 0225 90
EP20XS HR	4250 2281 91	4081 0245 90	EP10PTS HR	4250 2267 90	4081 0222 90
EP4PTX HR	4250 2058 90	4081 0122 90	EP12PTS HR	4250 2267 92	4081 0226 90
EP5/6PTX HR	4250 2058 90	4081 0122 90	EP14PTS HR	4250 2267 93	4081 0242 90
EP7PTX HR	4250 2058 90	4081 0122 90	EP18PTS HR	4250 2267 94	4081 0256 90
EP8PTX HR	4250 2267 91	4081 0279 90			

Oil filling kit (150 ml oil, syringe) 4081 0121 90

For complete information, see spare parts list.

HYDRAULIC IMPULSE NUTRUNNERS

ErgoPulse – Accessories

Guided extensions

Available for ErgoPulse models	Square drive in	Diameter of outgoing spindle mm	Length mm	Marking	Ordering No.
6-8XS and 5-8PT/PTS/PTX	3/8	13	100	EP10-13-100	4023 3600 00
	3/8	13	150	EP10-13-150	4023 3601 00
	3/8	13	200	EP10-13-200	4023 3611 00
	3/8	13	250	EP10-13-250	4023 3612 00
	3/8	13	300	EP10-13-300	4023 3613 00
10C and 10-12XS	1/2	16	100	EP13-16-100	4023 3602 00
	1/2	16	150	EP13-16-150	4023 3603 00
	1/2	16	200	EP13-16-200	4023 3604 00
	1/2	16	250	EP13-16-250	4023 3614 00
	1/2	16	300	EP13-16-300	4023 3615 00
14XS, 9-13PTX and 10-12PT/PTS	1/2	18	100	EP13-18-100	4023 3605 00
	1/2	18	150	EP13-18-150	4023 3606 00
	1/2	18	200	EP13-18-200	4023 3607 00
	1/2	18	250	EP13-18-250	4023 3616 00
	1/2	18	300	EP13-18-300	4023 3617 00
16XS/20XS, 14PTS/18PTS and 15PTX/19PTX	3/4	25	100	EP20-25-100	4023 3608 00
	3/4	25	150	EP20-25-150	4023 3609 00
	3/4	25	200	EP20-25-200	4023 3610 00
	3/4	25	250	EP20-25-250	4023 3618 00
	3/4	25	300	EP20-25-300	4023 3619 00

Guided sockets

Available for ErgoPulse models	Square drive in	Width across flats mm/in	Diameter of outgoing spindle mm	Marking	Ordering No.
Metric sockets					
6-8XS and 5-8PT/PTS/PTX	3/8	10	13	EP10-13	4026 4210 00
	3/8	13	13	EP13-13	4026 4213 00
	3/8	16	13	EP16-13	4026 4216 00
	3/8	17	13	EP17-13	4026 4217 00
	3/8	18	13	EP18-13	4026 4218 00
	3/8	19	13	EP19-13	4026 4219 00
14XS, 9-13PTX and 10-12PT/PTS	1/2	13	18	EP13-18	4026 4313 00
	1/2	16	18	EP16-18	4026 4316 00
	1/2	17	18	EP17-18	4026 4317 00
	1/2	18	18	EP18-18	4026 4318 00
	1/2	19	18	EP19-18	4026 4319 00
	1/2	24	18	EP24-18	4026 4324 00
16XS/20XS, 14PTS/18PTS and 15PTX/19PTX	3/4	18	25	EP18-25	4026 4418 00
	3/4	24	25	EP24-25	4026 4424 00
	3/4	30	25	EP30-25	4026 4430 00
UNC/UNF-sockets					
6-8XS and 5-8PT/PTS/PTX	3/8	7/16	13	EP7/16-13	4026 4211 00
	3/8	1/2	13	EP1/2-13	4026 4212 00
	3/8	9/16	13	EP9/16-13	4026 4214 00
	3/8	3/4	13	EP3/4-13	4026 4219 00
14XS, 9-13PTX and 10-12PT/PTS	1/2	1/2	18	EP1/2-18	4026 4312 00
	1/2	9/16	18	EP9/16-18	4026 4314 00
	1/2	3/4	18	EP3/4-18	4026 4319 00
	1/2	15/16	18	EP15/16-18	4026 4323 00
16XS/20XS, 14PTS/18PTS and 15PTX/19PTX	3/4	3/4	25	EP3/4-25	4026 4419 00
	3/4	15/16	25	EP15/16-25	4026 4423 00
	3/4	11/8	25	EP11/8-25	4026 4429 00

Guided quick change chuck for power tools

Available for ErgoPulse models	Square drive in	Female hex in	Diameter of outgoing spindle mm	Marking	Ordering No.
6-8XS and 5-8PT/PTS/PTX	3/8	1/4	13	EP3/8-1/4-13	4026 4501 00
	3/8	7/16	13	EP3/8-7/16-13	4026 4502 00
14XS, 9-13PTX and 10-12PT/PTS	1/2	7/16	18	EP1/2-7/16-18	4026 4503 00

GUIDED SOCKETS AND EXTENSIONS

Specially designed for ErgoPulse nutrunners, Atlas Copco guided sockets and extensions provide deep engagement over the anvil bringing tool and attachment together as ”one unit”. They give quality, ergonomic and cost saving benefits.

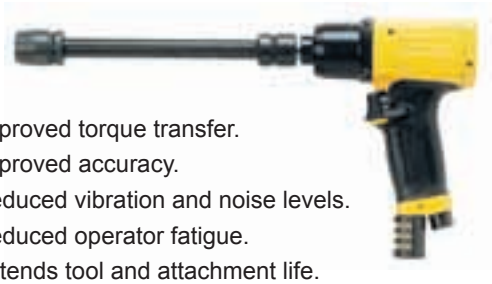

- Improved torque transfer.
- Improved accuracy.
- Reduced vibration and noise levels.
- Reduced operator fatigue.
- Extends tool and attachment life.

OPTIONAL ACCESSORIES

Pistol grip models	Protective cover	Support handle
EP6/7XS HR	4250 2089 00	
EP8XS HRX	4250 1895 00	
EP10XS HR	4250 1784 00	
EP12XS HR	4250 2459 00	
EP14XS HR	4250 2160 00	
EP16XS HR	4250 2282 00	4250 2396 91
EP20XS HR	4250 2288 00	Included
EP4/5/6PTX HR	4250 2465 00	
EP7/8PTX HR	4250 2466 00	
EP9PTX HR	4250 2467 00	
EP13PTX HR	4250 2718 00	4250 2396 81
EP15PTX HR	4250 2674 00	4250 2396 83
EP19PTX HR	4250 2719 00	4250 2396 82
EP5/6PT/PTS HR	4250 2393 00	
EP7/8PT/PTS HR	4250 1784 00	
EP10PT/PTS HR	4250 1743 00	
EP12PT/PTS HR	4250 1858 00	
EP14PTS HR	4250 2228 00	4250 2396 81
EP18PTS HR	4250 2319 00	4250 2396 80

For complete information, see spare parts list.

MONITORING IMPULSE NUTRUNNER

Pulsor

For quality critical applications
Pulse tools have been favorites on the production line for many years. They are light and compact, fast and powerful, and best of all they generate virtually no reaction force. Atlas Copco's new Pulsor gives you all advantages of a pulse tool, with the intelligence of an electric fastening system.

The earlier you catch a mistake, the less it costs. Pulsor alerts you to mistakes as soon as they are made. Lights on the back of the tool tell the operator if screws are correctly tightened. They inform the user about torque, early shut-off or if parts have been forgotten. In fact, Pulsor will monitor repeatability and can report results. The Pulsor with its monitoring system is designed for quality critical applications.

The system
The Pulsor system consists of a tool, cable and monitoring unit. Atlas Copco also offers different software packages for configuration and analysis, as well as service monitoring.

Tool
The tools are an ergonomic high performance range of impulse nutrunners with monitoring and signal lights to provide direct operator feedback.

Cables
Two versions of the resistant and strong electric tool cable are available, straight or spiraling.

Monitoring unit
The Pulsor Focus is a monitoring unit. The unit remembers up to 4,000 tightenings – everything from torque results and rundown time to identification number and line pressure (see below for a full list of parameters). The result can easily be sent to a network and stored on a server. They can also be transferred directly to a PC and then analysed in a program such as Excel. This means that you easily can fine-tune the process and ensure that every tightening in every shift is perfect. And if they are not perfect, you can see why.

Pulsor monitors and records:

- Torque result
- Angle
- Premature shut-off
- Number of pulses
- Tightening time
- Rundown time
- Barcode number

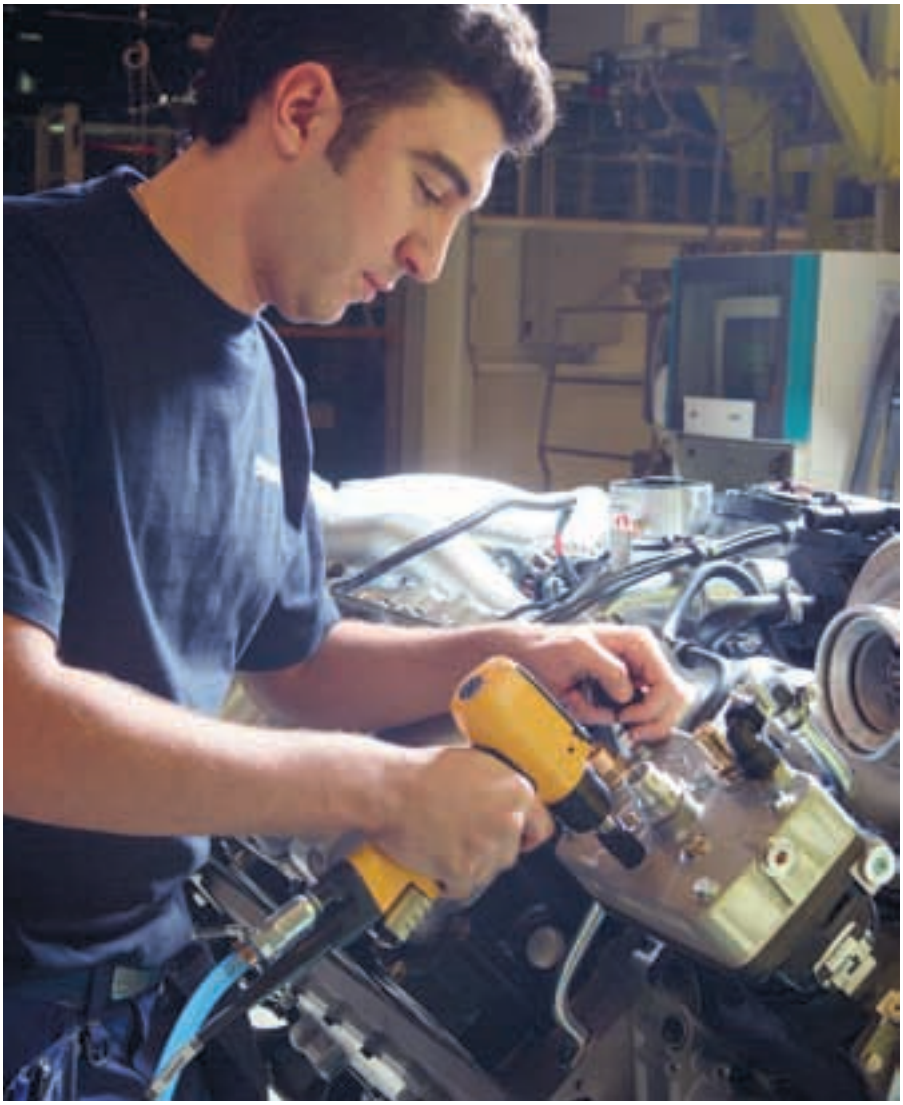

Software
The PC based ToolsTalk Pulsor software is used for setting advanced monitoring of tightening and tool parameters allowing set up communication with factory networks.

MONITORING IMPULSE NUTRUNNER

Pulsor

Improve quality

- **No missed screws** – Pulsor counts the screws and signals “Batch OK”.
- **Avoid stripped screws** – Pulsor also monitors the angle too see if the screw has been tightening correctly.
- **Correct torque** – Pulsor monitors the torque level to ensure it is correct.
- **Eliminate premature shut-off** – Lamps warn operators if they released trigger too early.
- **Good repeatability** – Get consistent tightening on hard and soft joints.
- **Result reported** – Result can be monitored via ethernet connection.

General benefits

- **Fast rundown** – Up to 8500 rpm for highest productivity.
- **No need for reaction arm** – Virtually no reaction force due to pulse tightening.
- **Avoid downtime** – Get an early warning with Tool drift alarm.

- **Easy to service** – Patented pulse technology with few parts.
- Plan service with service alarms.
- Illumination of working area with bright LEDs.

Model	Bolt size mm	Square drive in	Torque range Nm	Torque range ft lb	Free speed r/min	Weight kg	Weight lb	Length mm	CS distance mm	Air consumption under load l/s	Air consumption under load cfm	Rec. hose size mm	Air inlet thread in	Sound level dB(A)	Ordering No.
EPP6 M9 HR42	M5	1/4[a]	5-9	4-7	3300	1.3	2.8	170	23	4	9	8	1/4	75	8431 0378 01
EPP6 M9 HR10	M5	3/8	5-9	4-7	3300	1.3	2.8	170	23	4	9	8	1/4	75	8431 0378 02
EPP6 M17 HR42	M6	1/4[a]	10-17	7-13	3500	1.3	2.8	170	23	6	13	8	1/4	80	8431 0378 04
EPP6 M19 HR10	M6	3/8	10-19	7-14	3500	1.3	2.8	170	23	6	13	8	1/4	80	8431 0378 06
EPP6 M28 HR42	M6-M8	1/4[a]	15-28	11-21	8500	1.3	2.8	170	23	7	15	8	1/4	82	8431 0378 08
EPP6 M32 HR10	M6-M8	3/8	16-32	12-24	8500	1.3	2.8	170	23	7	15	8	1/4	82	8431 0378 10
EPP8 M42 HR10	M8	3/8	20-42	15-31	6900	1.5	3.4	182	26	9	19	10	1/4	80	8431 0378 18
EPP8 M55 HR10	M8-M10	3/8	30-55	22-40	6900	1.5	3.4	182	26	9	19	10	1/4	80	8431 0378 20
EPP8 M70 HR10	M10	3/8	40-70	29-52	6900	1.5	3.4	182	26	9	19	10	1/4	81	8431 0378 25
EPP10 M90 HR13	M10	1/2	50-90	37-66	4900	2.0	4.5	194	30	11	23	10	1/4	83	8431 0378 30
EPP11 M110 HR13	M12	1/2	70-110	51-88	5100	2.1	4.6	202	30	12	25	13	1/4	83	8431 0378 35

[a] Female hexagon drive. Quick change chuck.

Controller software

Pulsor's functionality is unlocked with the RBU (Rapid Backup Unit) key. This patented device gives you access to the functionality you need while providing a backup for the data you have programmed yourself. There are two levels of functionality: silver and bronze.

Function	Silver	Bronze
Number of results in the result database	4000	4000
Reference Setup	Yes	Yes
Tool Lock Box	Yes	Yes
Network/TCP/IP	Yes	Yes
I/O-bus (CAM-cabel)	Yes	Yes
Click wrench	Yes	Yes
ToolsNet	Yes	No
Number of Psets	8	2
Number of jobs	8	0
Statistics	Yes	No
Number of events	500	100
Barcode reader	Yes	No
Tool drift alarm	Yes	No
SPC alarm	Yes	No

RBU Silver

RBU Bronze

Pulsor Focus

Tool accessories

Model	Ordering No.
Pulsor Focus	
Pulsor Focus	8433 6700 05
Pulsor Focus - DN	8433 6740 05
Pulsor Focus - PB	8433 6742 05
Pulsor Focus - Ethernet IP	8433 6749 05
Pulsor tool cable	
5 m straight	4250 2533 05
12 m straight	4250 2533 12
5 m spiral cable	4250 2533 06
12 m spiral cable	4250 2533 13
3 m spiralized	4250 2533 53
5 m spiralized	4250 2533 55
7 m spiralized	4250 2533 57
RBU	
Silver	8433 6015 20
Bronze	8433 6010 10
Software – ToolsTalk Pulsor	
1-user license	8092 1171 01
5-user license	8092 1171 05
10-user license	8092 1171 10
Plant license	8092 1171 99
Pulsor manuals	
English	9836 2463 01
German	9836 2463 04
French	9836 2463 03
Japanese	9836 2463 95
Spanish	9836 2463 05
Accessory cables	
I/O bus cable 3 m	4222 0470 03
I/O bus cable 10 m	4222 0470 10
I/O termination plug	4222 0443 00
Protective cover	
EPP6	4250 2588 00
EPP8	4250 2588 01
EPP10	4250 2588 02
EPP11	4250 2588 03
Suspension yoke	
EPP6	4250 2563 80
EPP8	4250 2563 81
EPP10	4250 2563 82
EPP11	4250 2563 83

ToolsTalk cable is included with ToolsTalk.

Controller accessories

Model	Ordering No.
Tool Lock Box (incl cable)	8433 0606 17
Extension box	8433 0606 18
Rotary selector	8433 0606 15
I/O Expander	8433 0564 38
RE-Alarm	8433 0560 03
Operator panel basic	8433 0565 10
Operator panel advanced	8433 0565 00

Pulsor System

Tool
Pulsor Focus
Tool cable
RBU
ToolsTalk

Needed components to install and run the Pulsor, excluding air installation.

Spiral cable

Straight cable

Extension unit

Spiralized cable

Tool Lock Box

SCREWDRIVERS

Ergonomic tools improve productivity

All Atlas Copco screwdrivers are designed with ergonomics in mind. Our philosophy is simple: each job shall be performed with a minimum of effort and a minimum amount of strain on the operator. By reducing the physical load and noise level, the operator will be less tired and this improves productivity.

The main benefits are:

- **High torque accuracy.**
- **Optimum grip and fast clutch** give minimum reaction force.
- **Ergonomic handle shape** reduces operator strain.
- **Lower sound level** reduces fatigue.

Lubrication-free

Atlas Copco screwdrivers are lubrication-free which offers following benefits:

- **Pollution-free** exhaust air contributes to better working environment.
- **No oil contamination** on critical components.
- No air line lubrication **saves installation costs** and reduces air line inspection and maintenance.

A complete range

Our pneumatic screwdrivers are named LUM, TWIST, LUF and LUD for pistol and straight models and LTV and TWIST VR for angle models. The battery screwdrivers ETB and BTV are also presented here for easy reference.

LUM and LTV models have a fast and accurate shut-off clutch for smooth performance and high quality tightening. They are the ideal tools for joints with high torque accuracy demands.

TWIST/LUF HR screwdrivers have a slip clutch, implying a pulsating force when the torque level is reached. These tools are suitable for soft joints or when the torque level may temporarily rise during the homing phase, for instance when using sheet metal screws, wood screws or self-tapping screws.

LUD/LUF HRD are direct drive screwdrivers that stall when final torque is reached. The torque level is adjusted by regulating the air pressure. LUD and LUF HRD are mainly used for self drilling and wood screws.

ELIZA is the family name of our low-voltage electric screwdrivers. These are available in four basic models covering needs for joints in the range from 0.03 to 3.5 Nm.

ETB/BTV battery screwdrivers combine the accurate and operator friendly performance of our famous mechanical shut-off clutch design and the most advanced battery tool technique. They offer air hose and cable free operation with industrial precision and service life. The range includes pistol grip models and angle head screwdrivers.

Multiple air inlets and air on top

The HRF tool models is an excellent example of how Atlas Copco puts ergonomics and the operator`s environment in focus in order to reduce operator strain.

HRF – Means that the air supply is done from the top of the tool (25 HRF) or that the tool has multiple air inlets (12 HRF) out of which from the top is one available option. These pistol grip configurations optimize operator comfort and productivity in applications where the air supply is best done from above the assembly line, or when space requirements in the application requires a different air supply configuration.

ESD – Electrostatic discharge

All straight screwdrivers and LTV009 angle models are ESD approved. 12 and 22 pistol models can be made ESD approved with an optional pistol grip handle. Make sure to use a conductive air hose in the installation.

Reporting, RE-versions with air signals

LUM screwdrivers are also available in RE-versions for process control. The RE-tools supply an air signal that can be connected to a controller to count the number of tightenings and to detect premature shut-off and rehits. One signal port in the back of the tool ensures maximum durability and ergonomics.

SCREWDRIVERS
Selection guide

SCREW TYPE	SCREWDRIVER								
Machine screw 4.8 Property class 4.8 normal for cross recessed and slotted screws	Ø Screw size	**M1.6**	**M2**	**M2.5**	**M3**	**M3.5**	**M4**	**M5**	**M6**
	Torque Nm/in lb	0.09/0.8	0.2/1.8	0.4/3.5	0.6/5.3	1.0/8.8	1.4/12.4	2.9/25.7	4.9/43.4
	Recommended tool					ETB			
		ELIZA / EBL							
			LUM10						
				LUM12					
				LUM21					
							LUM22		
				LTV009					
								LTV18	
								LUM32	
								ERGOPULSE	
Machine screw 8.8 Property class 8.8 normal for hexagon, Allen head and Torx ?. Locking nut with plastic insert, increase torque 10%, mechanical-lock nut, increase torque 20%	Ø Screw size	**M1.6**	**M2**	**M2.5**	**M3**	**M3.5**	**M4**	**M4.5**	**M5**	**M6**
	Torque Nm/in lb	0.2/1.8	0.4/3.5	0.7/6.2	1.2/10.6	1.9/16.8	2.9/25.7	4.3/38.1	5.7/50.4	9.8/86.7
	Recommended tool					ETB				
		ELIZA / EBL								
		LUM10								
				LUM12						
				LUM21						
						✡		LUM22		
				LTV009						
									LTV18	
									LUM32	
							ERGOPULSE			
Thread rolling screw-M Property class between 8.8 and 10.9 due to case hardening. Taptite? and Swageform are examples	Ø Screw size		**M2**		**M3**		**M4**	**M5**	**M6**	
	Torque Nm/in lb		0.5/4.4		1.4/12.4		3.2/28.3	6.5/57.5	11.0/97.3	
	Recommended tool					ETB				
		ELIZA / EBL								
		LUM10								
			LUM12							
			LUM21							
					✡		LUM22			
			LTV009							
								LTV18		
								LUM32		
Thread forming screw-ST	Ø Screw size	**ST2.2**	**ST2.9**	**ST3.5**	**ST4.2**	**ST4.8**	**ST5.5**	**ST6.3**		
	Torque Nm/in lb	0.3/2.7	1.0/8.8	1.8 /15.9	2.9 /25.7	4.2 /37.2	6.7/59.3	9.1/80.5		
	Recommended tool		LUM SM							
		LUF10								
			✸		TWIST12/22					
					LUF34					
						ERGOPULSE				
Thread forming screw-ST for plastic	Ø Screw size	**ST2.2**	**ST2.9**	**ST3.5**	**ST4.2**	**ST4.8**	**ST5.5**	**ST6.3**		
	Torque Nm/in lb	0.3/2.7	1.0/8.8	1.8/15.9	2.9/25.7	4.2/37.2	6.7/59.3	9.1/80.5		
	Recommended tool	ELIZA / EBL								
			LUM SM							
		LUM10								
			LUM12							
			LUM21							
				✡			LUM22			
			LTV009							
								LTV18		
								LUM32		
Self drilling screw-ST	Ø Screw size	**ST2.2**	**ST2.9**	**ST3.5**	**ST4.2**	**ST4.8**	**ST5.5**	**ST6.3**		
	Torque Nm/in lb	0.3/2.7	1.0/8.8	1.8/15.9	2.9/25.7	4.2/37.2	6.7/59.3	9.1/80.5		
	Recommended tool		TWIST12							
					LUD					
			TWIST12							
						LUF34				
Wood screw	Torque Nm/in lb		1.5/13.3	3/26.5	5/44.2	7.5/66.4		12/106.2		
	Recommended tool		LUD12/22							
			TWIST12/22							
					LUF34					

Shut-off clutch | ErgoPulse | Slip clutch | Direct drive

✸ With optional coupling-ring. Ordering No. 4210 2316 01

✡ With optional spring. Ordering No. 4210 1831 00

SCREWDRIVERS

Pistol grip models – Air shut-off control

Screw size **M2.2 – M6**
Torque range **0.2 – 15.5 Nm**

Shut of tools are the best choice for machine screws, thread rolling screws and threads forming screws for plastic.

- **More reliable joints** – The LUM shut-off mechanism means accurate tightening, time after time, independent of variations in joint stiffness.
- **Low reaction force** – Rapid clutch with air shut-off reduces the reaction force on the wrist.
- **Low sound levels** – The housing with patented silencer gives a low sound level.
- **All models designed for maximum operator comfort** – The HR can be used with high grip when feed force is needed or with low grip for minimal reaction force. HRX models are perfectly balanced for standard pistol grip applications.
- **Lubrication-free**. Oil free exhaust. Easy installation.
- **HRF** – Means that the air supply is done from the top of the tool (LUM25 HRF) or that the tool has multiple air inlets (LUM12 HRF) out of which from the top is one available option. These pistol grip configurations optimize operator comfort and productivity in applications where the air supply is best done from above the assembly line, or when space requirements in the application requires a different air supply configuration.
- **The LUM12, 22 and 32 series** both feature compact design, low weight combined with power and speed comparable to larger sized tools. High accuracy and torque repetability combined with durability are always core features for Atlas Copco´s pneumatic screwdrivers.

- **RE-reporting** – LUM pistol tools are available in RE-reporting version for process controll, either as a separate tool model or as a regular tool in combination with an RE-kit.
- **Soft stop options** – This model features a modified clutch and gear package for those applications where shock sensitive electronic devices might be harmed by the vibrations from the clutch action. The smooth shut-off also reduces the jerk to the hand of the operator.

LUM SM – for sheet metal screws

When tightening screws in sheet metal you might need a high torque to produce the threads in the metal and low final torque. LUM SM runs the screw down at maximum torque with the clutch deactivated. Towards the end of the tightening the shut-off clutch is automatically activated. The clutch then releases at the desired torque. The front nose is modified to fit different applications and screw types.

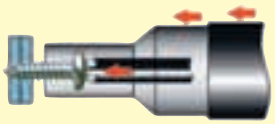

Clutch deactivated

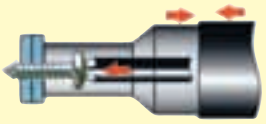

Clutch activated

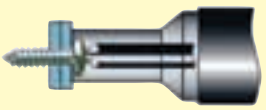

Clutch release/shut-off

Model	Torque range soft joint Nm	Torque range soft joint in lb	Free speed r/min	Weight kg	Weight lb	Length mm	CS distance mm	Air consumption at free speed l/s	Air consumption at free speed cfm	Rec. hose size mm	Air inlet thread in	Sound level dB(A)	Ordering No.
Pistol grip models with trigger start													
LUM22 HR3	0.6 - 3	5.3 - 26.5	2200	0.85	1.9	186	18	7.5	16	8	1/4	73	8431 0269 00
LUM22 HR3-RE	0.6 - 3	5.3 - 26.5	2200	0.85	1.9	186	18	7.5	16	8	1/4	73	8431 0278 63
LUM22 HR4	0.6 - 4	5.3 - 35.4	1650	0.85	1.9	186	18	7.5	16	8	1/4	73	8431 0269 02*
LUM22 HR4-RE	0.6 - 4	5.3 - 35.4	1650	0.85	1.9	186	18	7.5	16	8	1/4	73	8431 0278 65
LUM22 HR6	1.5 - 6.5	13.3 - 57.5	1150	0.85	1.9	186	18	7.5	16	8	1/4	73	8431 0269 01
LUM22 HR6-RE	1.5 - 6.5	13.3 - 57.5	1150	0.85	1.9	186	18	7.5	16	8	1/4	73	8431 0278 64*
LUM22 HR10	3.5 - 10	31 - 88.5	750	1	2.2	218	18	7.5	16	10	1/4	74	8431 0269 03
LUM22 HR10-RE	3.5 - 10	31 - 88.5	750	1	2.2	218	18	7.5	16	10	1/4	74	8431 0278 66
LUM22 HR12	3.5 - 12.5	31 - 110.6	500	1	2.2	210	18	7.5	16	10	1/4	73	8431 0269 04*
LUM22 HR12-370	3.5 - 12.5	31 - 110.6	370	1	2.2	210	18	7.5	16	10	1/4	73	8431 0269 05
LUM22 HR12-RE	3.5 - 12.5	31 - 110.6	500	1	2.2	210	18	7.5	16	10	1/4	73	8431 0278 67
LUM32 HR10	5 - 10	44.2 - 88.5	750	0.72	1.6	183	18.5	7.5	16	10	1/4	74	8431 0269 90
LUM32 HR15	7.5 - 15.5	66 - 137.2	450	0.72	1.6	183	18.5	7.5	16	10	1/4	74	8431 0269 91

Continued....

SCREWDRIVERS

Pistol grip models – Air shut-off control

Model	Torque range soft joint Nm	Torque range soft joint in lb	Free speed r/min	Weight kg	Weight lb	Length mm	CS distance mm	Air consumption at free speed l/s	Air consumption at free speed cfm	Rec. hose size mm	Air inlet thread in	Sound level dB(A)	Ordering No.
Pistol grip models with trigger and push start													
LUM22 HR3-P	0.6- 3	5.3- 26.5	2200	0.85	1.9	186	21	7.5	16	8	1/4	74	8431 0269 06
LUM22 HR4-P	0.6- 4	5.3- 35.4	1650	0.85	1.9	186	21	7.5	16	8	1/4	74	8431 0269 08*
LUM22 HR6-P	1.5- 6.5	13.3- 57.5	1150	0.85	1.9	186	21	7.5	16	8	1/4	74	8431 0269 07*
LUM22 HR10-P	3.5- 10	31- 88.5	750	1	2.2	218	21	7.5	16	10	1/4	74	8431 0269 09
LUM22 HR12-P	3.5- 12.5	31-110.6	500	1	2.2	210	21	7.5	16	10	1/4	74	8431 0269 10*
LUM22 HR12-370-P	3.5- 12.5	31-110.6	370	1	2.2	210	21	7.5	16	10	1/4	74	8431 0269 11
Balanced grip models with trigger start													
LUM12 HRX1	0.6- 1.8	5.3- 15.9	2300	0.65	1.4	176	15	6	13	6	1/8	73	8431 0278 58
LUM12 HRX1-RE	0.6- 1.8	5.3- 15.9	2300	0.65	1.4	176	16	6	13	6	1/8	73	8431 0278 59
LUM12 HRX2	0.6- 2.5	5.3- 22.1	1650	0.65	1.4	176	16	6	13	6	1/8	73	8431 0278 56
LUM12 HRX2-RE	0.6- 2.5	5.3- 22.1	1650	0.65	1.4	176	16	6	13	6	1/8	73	8431 0278 57
LUM12 HRX3	0.4- 3.5	5.3- 31.9	1150	0.7	1.5	186	16	6	13	6	1/8	73	8431 0278 54*
LUM12 HRX3-RE	0.4- 3.5	3.5- 31.9	1150	0.7	1.5	186	16	6	13	6	1/8	73	8431 0278 55
LUM12 HRX5	0.4- 5	3.5- 44.2	850	0.7	1.5	186	16	6	13	6	1/8	73	8431 0278 51*
LUM12 HRX5-RE	0.4- 5	3.5- 44.2	850	0.7	1.5	186	16	6	13	6	1/8	73	8431 0278 53
LUM12 HRX5-170	0.4- 5	3.5- 44.2	170	0.7	1.5	196	16	6	13	6	1/8	73	8431 0278 47
LUM12 HRX5-350	0.4- 5	3.5- 44.2	350	0.7	1.5	186	16	6	13	6	1/8	73	8431 0278 48
LUM12 HRX5-350-RE	0.4- 5	3.5- 44.2	350	0.7	1.5	186	16	6	13	6	1/8	73	8431 0278 49
LUM12 HRX8	1.5- 8	13.3- 70.8	500	0.7	1.5	186	16	6	13	6	1/8	73	8431 0278 60*
LUM12 HRX8-RE	1.5- 8	13.3- 70.8	500	0.7	1.5	186	16	6	13	6	1/8	73	8431 0278 61
LUM12 HRX8-50	1.5- 8	13.3- 70.8	50	0.7	1.5	196	16	6	13	6	1/8	73	8431 0280 25
LUM12 HRX8-110	1.5- 8	13.3- 70.8	110	0.7	1.5	196	16	6	13	6	1/8	73	8431 0280 27
LUM22 HRX2	1.2- 2[a]	10.6- 17.7	4500	0.9	2	187	18	9	19	8	1/4	74	8431 0269 29
LUM22 HRX2-3200	1.1- 2.6[a]	9.7- 23	3200	0.9	2	187	18	9	19	8	1/4	74	8431 0278 85
LUM22 HRX3	0.6- 3[a]	5.3- 26.5	2250	0.9	2	187	18	9	19	8	1/4	74	8431 0269 22
LUM22 HRX3.5	0.6- 3.5	5.3- 29.2	2250	0.9	2	187	18	9	19	8	1/4	74	8431 0263 99
LUM22 HRX3-RE	0.6- 3[a]	5.3- 26.5	2250	0.9	2	187	18	9	19	8	1/4	74	8431 0278 70
LUM22 HRX4	0.6- 4[a]	5.3- 35.4	1650	0.9	2	187	18	9	19	8	1/4	74	8431 0269 20*
LUM22 HRX6	1.5- 6.5[a]	13.3- 57.5	1100	0.95	2.1	197	18	9	19	8	1/4	74	8431 0269 21*
LUM22 HRX6-RE	1.5- 6.5[a]	13.3- 57.5	1100	0.95	2.1	197	18	9	19	8	1/4	74	8431 0278 71
LUM22 HRX10	3.5- 10[a]	31- 88.5	800	1.1	2.4	219	18	9	19	10	1/4	74	8431 0269 23*
LUM22 HRX10-RE	3.5- 10[a]	31- 88.5	800	1.1	2.4	219	18	9	19	10	1/4	74	8431 0278 73
LUM22 HRX11-220	3.5-12.5[a]	31-110.6	220	1.15	2.5	229	18	9	19	10	1/4	74	8431 0282 20
LUM22 HRX12	3.5-12.5[a]	31-110.6	500	1.1	2.4	211	18	9	19	10	1/4	74	8431 0269 24*
LUM22 HRX12-RE	3.5-12.5[a]	31-110.6	500	1.1	2.4	211	18	9	19	10	1/4	74	8431 0278 74
LUM22 HRX12-50	3.5-12.5[a]	31-110.6	50	1.15	2.5	229	18	9	19	10	1/4	74	8431 0280 26
LUM22 HRX12-120	3.5-12.5[a]	31-110.6	120	1.15	2.5	229	18	9	19	10	1/4	74	8431 0280 28
LUM22 HRX12-370	3.5-12.5[a]	31-110.6	370	1.1	2.4	211	18	9	19	10	1/4	74	8431 0269 25
LUM22 HRX12-370-RE	3.5-12.5[a]	31-110.6	370	1.1	2.4	211	18	9	19	10	1/4	74	8431 0278 75
Balanced grip models with trigger start and soft stop function													
LUM10 HRX1-SS	0.2- 0.6	1.8- 5.3	800	0.65	1.4	176	16	6	13	6	1/8	70	8431 0280 02
LUM12 HRX1-SS	0.6- 1.3	5.3- 11.5	800	0.65	1.5	176	16	6	13	6	1/8	70	8431 0280 01
Multiple air inlet models and air on-top models with trigger start													
LUM12 HRF1	0.6- 1.8	5.3- 15.9	2300	0.65	1.4	190	16	6	13	6	1/8	73	8431 0269 30
LUM12 HRF2	0.6- 2.5	5.3- 22.1	1650	0.65	1.4	190	16	6	13	6	1/8	73	8431 0269 31
LUM12 HRF3	0.4- 3.6	3.5- 31.9	1150	0.7	1.5	200	16	6	13	6	1/8	73	8431 0269 32*
LUM12 HRF5	0.4- 5	3.5- 44.2	850	0.7	1.5	200	16	6	13	6	1/8	73	8431 0269 33*
LUM12 HRF8	1.5- 8	13.3- 70.8	500	0.7	1.5	200	16	6	13	6	1/8	73	8431 0269 34*
LUM25 HRF11-U	3.5- 5.5[a]	31- 49	1100	1.2	2.6	226	26	6	13	8	1/4	73	8431 0249 09
LUM25 HRF08-U-RE	3.5- 7.5[a]	31- 66	800	1.2	2.6	226	26	6	13	8	1/4	73	8431 0264 98
LUM25 HRF08-U	3.5- 7.5[a]	31- 66	800	1.2	2.6	226	26	6	13	8	1/4	73	8431 0249 07*
LUM25 HRF05-U-RE	3.5-12.0[a]	31- 110	500	1.2	2.6	226	26	6	13	8	1/4	73	8431 0264 96
LUM25 HRF05-U	3.5-12.0[a]	31- 110	500	1.2	2.6	226	26	6	13	8	1/4	73	8431 0249 05*
Sheet metal screwdrivers with trigger start													
LUM22 HR4-SM	0.5- 4.5	4.4- 40	800	0.85	1.9	186	18	7.5	16	8	1/4	73	8431 0267 52*
LUM22 HR12-SM	3.5- 12.5	31-110.6	500	1.0	2.2	210	18	7.5	16	8	1/4	73	8431 0249 52*

[a] 1.4-4 Nm with spring, Ordering No. 4210 1831 00.

* Basic tools of the range, cover most needs.

All models: Are reversible and have quick change chuck.
All data at an air pressure of 6.3 bar.
For operator comfort support handle is recommended for high torque, see Optional Accessories.

ACCESSORIES INCLUDED
Page 43

OPTIONAL ACCESSORIES
Page 43

SELECTED SERVICE KITS
Page 43

SCREWDRIVERS

Straight models – Air shut-off control

Screw size **M1.6 – M6**
Torque range **0.1 – 12.5 Nm**

- **More reliable joints** – The LUM shut-off mechanism means accurate tightening, time after time, independent of variations in joint stiffness.
- **Low reaction force** – Rapid clutch with air shut-off reduces the reaction force on the wrist.
- **Low sound levels** – Thanks to non resonating plastics and soft grips, patented silencer and exhaust hose.
- **Operator comfort** – Correct grip diameter and a comfortable grip surface are key elements to a truly ergonomic design that will reduce reaction forces on the operator, reduce fatigue and eliminate cold hands.
- **The LUM12 and LUM22** both offer very high power and speed for their size combined with the most ergonomic design in the market with the new soft grip handle and the ergo-push collar to facilitate the push motion.
- **RE-reporting** – All LUM straight screwdrivers with lever start can be supplied in reporting, -RE, versions or can be converted locally. (See page 43 for conversion kits).

- **Soft stop options** – This model features a modified clutch and gear package for those applications where shock sensitive electronic devices might be harmed by the vibrations from the clutch action. The smooth shut-off also reduces the jerk to the hand of the operator.

Model	Torque range soft joint Nm	Torque range soft joint in lb	Free speed r/min	Weight kg	Weight lb	Length mm	CS distance mm	Air consumption at free speed l/s	Air consumption at free speed cfm	Rec. hose size mm	Air inlet thread in	Sound level dB(A)	Ordering No.
Straight models with push start and button reverse													
LUM10 PR03	0.1 - 1.5	0.8- 13	300	0.4	0.9	206	15	3	6	6	1/8	66	8431 0146 05*
LUM10 PR05	0.1 - 1.5	0.8- 13	460	0.4	0.9	206	15	3	6	6	1/8	66	8431 0146 09*
LUM10 PR12	0.1 - 1.1	0.8- 10	1200	0.4	0.9	196	15	3	6	6	1/8	66	8431 0146 17*
LUM10 PR21	0.1 - 0.7	0.8- 6	2000	0.4	0.9	196	15	3	6	6	1/8	67	8431 0146 25
LUM12 PR1	0.6 - 1.6	5.3- 14.2	1900	0.55	1.2	195	15	4.5	10	6	1/8	76	8431 0278 29
LUM12 PR2	0.4 - 2.3	3.5- 20.4	1450	0.55	1.2	195	15	4.5	10	6	1/8	76	8431 0278 27*
LUM12 PR3	0.4 - 3.2	3.5- 28.3	1000	0.55	1.2	195	15	4.5	10	6	1/8	76	8431 0278 26*
LUM12 PR4	0.4 - 4.2	3.5- 37.2	750	0.55	1.2	195	15	4.5	10	6	1/8	76	8431 0278 25
LUM12 PR5	0.4 - 5	3.5- 44.2	450	0.55	1.2	195	15	4.5	10	6	1/8	76	8431 0278 30
LUM21 PR04-P	0.5 - 4.5	4.4- 40	320	0.7	1.5	239	18	4	8	6	1/8	70	8431 0277 02
LUM21 PR07-P	0.5 - 4.5	4.4- 40	700	0.7	1.5	239	18	4	8	6	1/8	70	8431 0277 00*
LUM21 PR10-P	0.5 - 3.2	4.4- 30	1000	0.7	1.5	239	18	4	8	6	1/8	71	8431 0277 08*
LUM21 PR14-P	0.5 - 2.4	4.4- 21	1400	0.7	1.5	239	18	4	8	6	1/8	71	8431 0277 14*
LUM21 PR23-P	0.5 - 1.5	4.4- 13	2200	0.7	1.5	239	18	4	8	6	1/8	69	8431 0277 20
LUM22 PR2-3500	1.1 - 2.5	9.7- 22.1	3500	0.75	1.7	211	15	7	15	8	1/4	73	8431 0278 89
LUM22 PR3	0.6 - 3.2	5.3- 28.3	2100	0.75	1.7	211	15	7	15	8	1/4	73	8431 0269 61
LUM22 PR4	0.5 - 4.0	4.4- 35.4	1600	0.75	1.7	211	15	7	15	8	1/4	73	8431 0269 55
LUM22 PR4-2300	0.7 - 4.5	5.9- 38.2	2300	0.75	1.7	211	15	7	15	8	1/4	73	8431 0278 81
LUM22 PR5-350	0.4 - 5.0	3.5- 44.2	350	0.75	1.7	211	15	7	15	8	1/4	73	8431 0269 60
LUM22 PR6	1.5 - 6.0	13.3- 53.1	1000	0.75	1.7	211	15	7	15	8	1/4	73	8431 0269 56*
LUM22 PR8-1100	1.5 - 8.0	13.3- 70.8	1100	0.9	2.0	224	15	7	15	8	1/4	73	8431 0278 88
LUM22 PR10	3.5 - 10.0	31- 88.5	700	0.95	2.1	232	15	7	15	8	1/4	76	8431 0269 58
LUM22 PR12	3.5 - 12.5	31-110.6	450	0.9	2.0	224	15	7	15	8	1/4	73	8431 0269 57*
LUM22 PR12-350	3.5 - 12.5	31-110.6	350	0.95	2.1	224	15	7	15	8	1/4	73	8431 0269 59
LUM22 PR12-850	3.5 - 12.0	31-106.2	850	1	2.2	246	15	8.5	15	8	1/4	73	8431 0278 80

Continued....

ACCESSORIES INCLUDED
Page 43

OPTIONAL ACCESSORIES
Page 43

SELECTED SERVICE KITS
Page 43

SCREWDRIVERS

Straight models – Air shut-off control

Model	Torque range soft joint Nm	Torque range soft joint in lb	Free speed r/min	Weight kg	Weight lb	Length mm	CS distance mm	Air consumption at free speed l/s	Air consumption at free speed cfm	Rec. hose size mm	Air inlet thread in	Sound level dB(A)	Ordering No.
Straight models with push start, button reverse and soft stop function													
LUM10 PR1-SS	0.2 - 0.6	1.8 - 5.3	460	0.4	0.9	206	15	3	6	6	1/8	66	8431 0280 06
LUM12 PR1-SS	0.6 - 1.3	5.3 - 11.5	800	0.55	1.2	195	15	4.5	10	6	1/8	73	8431 0280 05
Straight models with lever start and without push start													
LUM12 SR1	0.6 - 1.8	5.3 - 15.9	2200	0.6	1.3	217	15	6	13	6	1/8	76	8431 0278 35
LUM12 SR2	0.5 - 2.5	4.4 - 22.1	1700	0.6	1.3	217	15	6	13	6	1/8	76	8431 0278 34*
LUM12 SR3	0.4 - 3.5	3.5 - 31	1200	0.6	1.3	217	15	6	13	6	1/8	76	8431 0278 33*
LUM12 SR4	0.4 - 4.5	3.5 - 39.8	850	0.6	1.3	217	15	6	13	6	1/8	76	8431 0278 32
LUM21 SR04-U	0.5 - 4.5	4.4 - 40	320	0.7	1.5	240	18	4	8	6	1/8	70	8431 0277 22
LUM21 SR07-U	0.5 - 4.5	4.4 - 40	700	0.7	1.5	240	18	4	8	6	1/8	70	8431 0277 24*
LUM21 SR07-U-RE	0.5 - 4.5	4.4 - 40	700	0.7	1.5	240	18	4	8	6	1/8	70	8431 0264 70
LUM21 SR10-U	0.5 - 3.2	4.4 - 30	1000	0.7	1.5	240	18	4	8	6	1/8	71	8431 0277 28*
LUM21 SR10-U-RE	0.5 - 3.2	4.4 - 30	1000	0.7	1.5	240	18	4	8	6	1/8	71	8431 0264 72
LUM21 SR14-U	0.5 - 2.4	4.4 - 21	1400	0.7	1.5	240	18	4	8	6	1/8	71	8431 0277 30
LUM21 SR23-U	0.5 - 1.5	4.4 - 13	2200	0.7	1.5	240	18	4	8	6	1/8	71	8431 0277 34
LUM22 SR3	0.6 - 3.2	5.3 - 28.3	1950	0.8	1.8	239	16	7	15	8	1/4	72	8431 0269 44
LUM22 SR4	0.6 - 4	5.3 - 35.4	1500	0.8	1.8	239	16	7	15	8	1/4	72	8431 0269 46
LUM22 SR5-300	0.4 - 5	3.5 - 44.2	300	0.8	1.8	239	16	7	15	8	1/4	72	8431 0269 51
LUM22 SR6	1.5 - 6	13.3 - 53.1	1000	0.85	1.9	239	16	7	15	8	1/4	72	8431 0269 47*
LUM22 SR10	3.5 - 10	31 - 88.5	700	1	2.2	260	16	7	15	8	1/4	74	8431 0269 49
LUM22 SR12	3.5 -12.5	31 -110.6	430	0.95	2.1	252	16	7	15	8	1/4	72	8431 0269 48*
LUM22 SR12-300	3.5 -12.5	31 -110.6	300	1	2.2	252	16	7	15	8	1/4	72	8431 0269 50
LUM37 SR36-U	1.5 - 4.5	13.3 - 40	3500	1.5	3.3	317	20	16	34	10	1/4	80	8431 0266 20
LUM37 SR25-U	5.0 - 7.5	44.2 - 66	2500	1.6	3.5	338	20	16	34	10	1/4	80	8431 0266 15
Straight models for sheet metal applications													
LUM21 SR07-U-SM[abc]	0.5 - 4.5	4.4 - 40	700	1.1	2.4	229	19	6	13	6	1/4	71	8431 0264 56

[a] Front end 12.5 mm (4210 3918 01) included.

[b] Optional front end 21 mm (4210 3918 02).

[c] See page 35 for more information about SM models.

ESD approved: LUM10/12/21/22 SR/PR

All models: Are reversible and have quick change chuck.

SR-models have ring reverse control.

PR-models have push button reverse.

* Basic tools of the range, cover most needs.

ACCESSORIES INCLUDED
Page 43

OPTIONAL ACCESSORIES
Page 43

SELECTED SERVICE KITS
Page 43

SCREWDRIVERS
Angle head models

Screw size **M2.2 – M6**
Torque range **0.4 – 15 Nm**

- **Good accessibility** – The small size, slim design angle head provides for excellent access in limited spaces and awkward positions.
- **Shut off tools** are the best choice for machine screws, thread rolling screws and threads forming screws for plastic.
- **Safer joints** – The rapid mechanism in shut-off models means accurate tightening, time after time, independent of variations in joint stiffness.
- **High capacity** – Despite the small size, the angle screwdrivers have a high capacity and wearing properties to match the highest demands in industrial line production.
- **Less operator fatigue** – The balance and the slim design contribute to the ergonomic design and make the tools convenient to work with for maximum operator performance.
- **Lubrication-free**. Oil free exhaust. Easy installation.

- **The new LTV009** angle head screwdrivers, designed with focus on accessibility, ergonomics, ease of handling and highest productivity without sacrificing accuracy in tightening. The result is a series of screwdrivers with unmatched performance for its size.
- **RE-reporting** – Connection ports for reporting signal, -RE, are easily arranged on the angle screwdrivers with a conversion kit available as optional equipment (see page 43).

Model	Torque range soft joint Nm	Torque range soft joint in lb	Free speed r/min	Weight kg	Weight lb	Length mm	Angle head height mm	Angle head centre to side mm	Air consumption at free speed l/s	Air consumption at free speed cfm	Rec. hose size mm	Air inlet thread in	Sound level dB(A)	Ordering No.
Air shut-off control models														
LTV009 R025-Q	0.6 - 2.5	5.3 - 22.1	1650	0.7	1.5	266	25	9	6	13	6	1/8	76	8431 0278 00
LTV009 R025-42	0.6 - 2.5	5.3 - 22.1	1650	0.7	1.5	266	25	9	6	13	6	1/8	76	8431 0278 01
LTV009 R025-6	0.6 - 2.5	5.3 - 22.1	1650	0.7	1.5	266	25	9	6	13	6	1/8	76	8431 0278 02
LTV009 R03-10	0.7 - 3	6.2 - 26.5	1400	0.7	1.5	266	25	9	6	13	6	1/8	76	8431 0278 23
LTV009 R035-Q	0.4 - 3.5	3.5 - 31	1100	0.7	1.5	266	25	9	6	13	6	1/8	76	8431 0278 03
LTV009 R035-42	0.4 - 3.5	3.5 - 31	1100	0.7	1.5	266	25	9	6	13	6	1/8	76	8431 0278 04
LTV009 R035-6	0.4 - 3.5	3.5 - 31	1100	0.7	1.5	266	25	9	6	13	6	1/8	76	8431 0278 05
LTV009 R05-Q	0.4 - 5	3.5 - 44.2	850	0.7	1.5	266	25	9	6	13	6	1/8	76	8431 0278 06
LTV009 R05-42	0.4 - 5	3.5 - 44.2	850	0.7	1.5	266	25	9	6	13	6	1/8	76	8431 0278 07
LTV009 R05-6	0.4 - 5	3.5 - 44.2	850	0.7	1.5	266	25	9	6	13	6	1/8	76	8431 0278 08
LTV009 R07-Q	1.1 - 7	9.7 - 61.9	500	0.7	1.5	266	25	9	6	13	6	1/8	76	8431 0278 09*
LTV009 R07-42	1.1 - 7	9.7 - 61.9	500	0.7	1.5	266	25	9	6	13	6	1/8	76	8431 0278 10*
LTV009 R07-6	1.1 - 7	9.7 - 61.9	500	0.7	1.5	266	28.5	11	6	13	6	1/8	76	8431 0278 11*
LTV009 R08-6-200	1.3 - 9	11.5 - 79.6	200	0.7	1.5	266	28.5	11	6	13	6	1/8	76	8431 0278 24*
LTV009 R09-Q	1.3 - 9	11.5 - 79.6	430	0.7	1.5	266	28.5	11	6	13	6	1/8	76	8431 0278 12
LTV009 R09-10	1.3 - 9	11.5 - 79.6	430	0.7	1.5	266	28.5	11	6	13	6	1/8	76	8431 0278 13
LTV009 R09-42	1.3 - 9	11.5 - 79.6	430	0.7	1.5	266	28.5	11	6	13	6	1/8	76	8431 0278 15
LTV009 R09-42M	1.3 - 9	11.5 - 79.6	430	0.7	1.5	266	28.5	11	6	13	6	1/8	76	8431 0278 16
LTV009 R09-6	1.3 - 9	11.5 - 79.6	430	0.7	1.5	266	28.5	11	6	13	6	1/8	76	8431 0278 17
LTV009 R11-Q	1.3 - 11	11.5 - 97.3	320	0.8	1.8	266	28.5	11	6	13	6	1/8	76	8431 0278 19*
LTV009 R11-10	1.3 - 11	11.5 - 97.3	320	0.8	1.8	266	28.5	11	6	13	6	1/8	76	8431 0278 20*
LTV009 R11-42	1.3 - 11	11.5 - 97.3	320	0.8	1.8	266	28.5	11	6	13	6	1/8	76	8431 0278 21*
LTV009 R11-6	1.3 - 11	11.5 - 97.3	320	0.8	1.8	266	28.5	11	6	13	6	1/8	76	8431 0278 22*

Continued....

SCREWDRIVERS

Angle head models

Model	Torque range soft joint Nm	Torque range soft joint in lb	Free speed r/min	Weight kg	Weight lb	Length mm	Angle head height mm	Angle head centre to side mm	Air consumption at free speed l/s	Air consumption at free speed cfm	Rec. hose size mm	Air inlet thread in	Sound level dB(A)	Ordering No.
Air shut-off control models														
LTV008 R09-10-220	1.3 - 9	11.5 - 79.6	220	0.8	1.8	285	28.5	11	6	13	6	1/8	76	8431 0281 39
LTV008 R09-6-70	1.3 - 9	11.5 - 79.6	70	0.8	1.8	285	28.5	11	6	13	6	1/8	76	8431 0281 46
LTV008 R11-6-100	1.3 - 11	11.5 - 97.3	100	0.8	1.8	285	28.5	11	6	13	6	1/8	76	8431 0280 29
LTV008 R11-6-50	1.3 - 11	11.5 - 97.3	50	0.8	1.8	285	28.5	11	6	13	6	1/8	76	8431 0280 30
LTV08 R03-6	0.5 - 3.2	4.4 - 26	1000	0.8	1.7	275	28.5	10	4	8	6	1/8	69	8431 0325 88
LTV08 R03-42	0.5 - 3.2	4.4 - 26	1000	0.8	1.7	275	28.5	10	4	8	6	1/8	69	8431 0325 84
LTV08 R03-Q	0.5 - 3.2	4.4 - 26	1000	0.8	1.7	275	28.5	10	4	8	6	1/8	69	8431 0325 92
LTV08 R05-6	0.5 - 4.5	4.4 - 39	700	0.8	1.7	275	28.5	10	4	8	6	1/8	69	8431 0325 78
LTV08 R05-42	0.5 - 4.5	4.4 - 39	700	0.8	1.7	275	28.5	10	4	8	6	1/8	69	8431 0325 74
LTV08 R05-Q	0.5 - 4.5	4.4 - 39	700	0.8	1.7	275	28.5	10	4	8	6	1/8	69	8431 0325 81
LTV18 R07-6	3.5 - 7	31 - 61	700	1.2	2.6	290	28.5	10	6	13	6	1/4	71	8431 0326 72*
LTV18 R07-42	3.5 - 7	31 - 61	700	1.2	2.6	290	28.5	10	6	13	6	1/4	71	8431 0326 61
LTV18 R07-Q	3.5 - 7	31 - 61	700	1.2	2.6	290	28.5	10	6	13	6	1/4	71	8431 0326 76
LTV18 R15-6	6.0 - 15	53 - 132	360	1.2	2.6	308	28	11	7	15	8	1/4	71	8431 0326 55
LTV18 R15-10	6.0 - 15	53 - 132	360	1.2	2.6	308	28	11	7	15	8	1/4	71	8431 0326 56*
LTV18 R15-42	6.0 - 15	53 - 132	360	1.2	2.6	308	28	11	7	15	8	1/4	71	8431 0326 54
LTV18 R15-Q	6.0 - 15	53 - 132	360	1.2	2.6	308	28	11	7	15	8	1/4	71	8431 0326 58
Slip clutch models with 1/4" square drive														
TWIST VR07-6	1.3 - 7.0	12 - 62	700	1.0	2.2	280	29	10	4	8	8	1/4	72	8431 0256 11*
TWIST VR13-6	2.0 - 6.0	18 - 53	1300	1.0	2.2	280	29	10	4	8	8	1/4	72	8431 0256 37
Slip clutch models with 1/4" female hexagon drive														
TWIST VR07-I6	1.3 - 7.0	12 - 62	700	1.0	2.2	280	29	10	4	8	8	1/4	72	8431 0256 03*
TWIST VR13-I6	2.0 - 6.0	18 - 53	1300	1.0	2.2	280	29	10	4	8	8	1/4	72	8431 0256 29

ESD approved: LTV008/009.

All models: Are reversible.
-42 = 1/4" female hexagon drive for bits.
-10 = 3/8" square drive.
-6 = 1/4" square drive for sockets.
-Q = 1/4" quick change chuck.

* Basic tools of the range, cover most needs.

ACCESSORIES INCLUDED
Page 43

OPTIONAL ACCESSORIES
Page 43

SELECTED SERVICE KITS
Page 43

SCREWDRIVERS
Slip-clutch

Screw size **M1.6 – M6**
Torque range **0.5 – 17 Nm**

The slip clutch tool is an excellent general purpose tool. It is a good choice for many wood or self-tapping applications where torque requirements are not consistent.

- **Flexible** – All models are reversible and designed for both left and right hand operations.
- **Fast tightening** – Fast rundown and tightening by the high speed/high torque combination.
- **All models designed for maximum operator comfort** – The HR can be used with high grip when feed force is needed or with low grip for minimal reaction force. HRX models are perfectly balanced for standard pistol grip applications.
- **Lubrication-free** – Oil free exhaust.
- **Easy installation**.

Model	Torque range soft joint Nm	Torque range soft joint in lb	Free speed r/min	Weight kg	Weight lb	Length mm	CS distance mm	Air consumption at free speed l/s	Air consumption at free speed cfm	Rec. hose size mm	Air inlet thread in	Sound level dB(A)	Ordering No.
Straight models with lever start													
TWIST12 SR3	0.7 - 3.3	6.2- 29.2	1650	0.65	1.4	225	15	6	13	6	1/8	76	8431 0278 44
TWIST12 SR4	0.5 - 4.2	4.4- 37.2	1100	0.65	1.4	225	15	6	13	6	1/8	76	8431 0278 43*
TWIST22 SR6	1.5 - 6.0	13.3- 53.1	1500	0.85	1.9	239	15	7	15	8	1/8	72	8431 0269 52
TWIST22 SR10	1.5 - 10.0	13.3- 88.5	700	0.9	2.0	246	15	7	15	8	1/8	74	8431 0269 53*
Straight models with push start													
TWIST22 PR2	1.1 - 2.6	9.7- 23	3200	0.75	1.7	242	15	7	15	8	1/4	73	8431 0278 93
TWIST22 PR7	1.5 - 7.5	13.3- 66.4	1100	0.75	1.7	211	15	7	15	8	1/4	73	8431 0278 90
TWIST22 PR6	2.2 - 6.5	19.5- 57.5	1600	0.75	1.7	211	15	7	15	8	1/4	73	8431 0278 91
TWIST22 PR4-2300	1.0 - 4.0	8.9- 35.4	2300	0.75	1.7	242	15	7	15	8	1/4	73	8431 0278 92
Pistol grip models with trigger and push start													
TWIST12 HRX2	0.6 - 2.4	5.3- 21.2	1650	0.65	1.4	176	15	6.5	14	6	1/8	73	8431 0278 40
TWIST12 HRX3	0.6 - 3.5	5.3- 31.0	1150	0.65	1.4	186	15	6.5	14	6	1/8	73	8431 0278 39
TWIST12 HRX4	0.5 - 4.4	4.4- 38.9	800	0.65	1.4	186	15	6.5	14	6	1/8	73	8431 0278 38*
TWIST22 HRX2-3200	1.1 - 2.6	9.7- 23	3200	1.05	2.3	205	15	9	19	8	1/4	74	8431 0278 87
TWIST22 HRX7	1.5 - 7.5	13.3- 66.4	1100	1.05	2.3	205	15	9	19	8	1/4	74	8431 0269 26
TWIST22 HRX10	1.5 - 10	13.3- 88.5	750	1.1	2.4	205	15	9	19	8	1/4	74	8431 0269 27
TWIST22 HRX12	5 - 12	44.2- 106.2	500	1.05	2.3	205	15	9	19	8	1/4	74	8431 0269 28
TWIST22 HR3	1.0 - 3.5	8.9- 31	2100	0.95	2.1	195	15	8	17	8	1/4	73	8431 0278 86
TWIST22 HR6	2.2 - 6.5	19.5- 57.5	1600	0.95	2.1	195	15	8	17	8	1/4	73	8431 0269 70
TWIST22 HR7	1.5 - 7.5	13.3- 66.4	1150	0.95	2.1	195	15	8	17	8	1/4	73	8431 0269 14
TWIST22 HR10	1.5 - 10.0	13.3- 88.5	750	1	2.2	205	15	8	17	8	1/4	74	8431 0269 15
TWIST22 HR12	5.0 - 12.0	44.2- 106.2	500	1	2.2	195	15	8	17	8	1/4	73	8431 0269 16*
LUF34 HR04	3.0 - 17.0	27.0- 150.0	440	1.4	3.1	265	21	9.5	19	8	1/4	79	8431 0311 05
LUF34 HR08	2.0 - 15.0	18.0- 133.0	750	1.4	3.1	265	21	9.5	19	8	1/4	79	8431 0311 09*
LUF34 HR16	3.0 - 12.0	27.0- 107.0	1600	1.4	3.1	265	21	9.5	19	8	1/4	79	8431 0311 17
Multiple air inlet models (12) and air-on-top models with trigger start and push start													
TWIST12 HRF3	0.6 - 3.5	5.3- 31	1150	0.7	1.5	200	15	6	2.8	6	1/8	73	8431 0269 41
TWIST12 HRF4	0.5 - 4.4	4.4- 38.9	850	0.7	1.5	200	15	6	2.8	6	1/8	73	8431 0269 40
TWIST HRF08[a]	1.5 - 7.5	13.0- 66.0	800	1.2	2.6	212	25	7	15	8	1/4	74	8431 0252 42
TWIST HRF16[a]	2.2 - 6.5	20.0- 58.0	1600	1.2	2.6	212	25	7	15	8	1/4	74	8431 0252 44*

[a] Only air-on-top models.

All models: Are reversible.
Female hexagon drive for bits: 1/4".
Have quick change chuck.

* Basic tools of the range, cover most needs.

ACCESSORIES INCLUDED
Page 43

OPTIONAL ACCESSORIES
Page 43

SELECTED SERVICE KITS
Page 43

SCREWDRIVERS
Direct drive

Screw size **M3 – M8**
Torque range **1.0 – 18 Nm**

- **Direct drive tools** are well suited for self-tapping and self-drilling applications where torque requirements are not consistent.
- **Flexible** – All models are reversible and designed for both left and right hand operations.
- **Combination tools** – COMBI models including drill chuck, can be used for screwdriving, drilling and tapping.
- **Good accessibility** – The short length of the pistol grip models allow very good accessibility in limited spaces.
- **Lubrication-free** – Oil free exhaust. Easy installation.
- **All models designed for maximum operator comfort** – The HR can be used with high grip when feed force is needed or with low grip for minimal reaction force. HRX models are perfectly balanced for standard pistol grip applications.

Model	Torque range soft joint Nm	Torque range soft joint in lb	Free speed r/min	Weight kg	Weight lb	Length mm	CS distance mm	Air consumption at free speed l/s	Air consumption at free speed cfm	Rec. hose size mm	Air inlet thread in	Sound level dB(A)	Ordering No.
Pistol grip models with trigger start. Direct drive													
LUD12 HRX2	1 - 2.5	8.8 - 22.1	1600	0.5	1.1	115	16	6.5	3.1	8	1/8	73	8431 0278 77
LUD12 HRX5	2 - 5	17.7 - 44.2	850	0.5	1.1	125	16	6.5	3.1	8	1/8	73	8431 0278 78
LUD12 HRX8	3.5 - 8	31.0 - 70.8	500	0.5	1.1	125	16	6.5	3.1	8	1/8	73	8431 0278 79*
LUD22 HR3	1.5 - 5	13.3 - 24.8	3600	0.65	1.4	125	18	8	3.8	8	1/4	73	8431 0269 17
LUD22 HR5	2.8 - 5.5	24.8 - 48.7	1650	0.65	1.4	125	18	8	3.8	8	1/4	73	8431 0269 18
LUD22 HR12	5 - 12	44.2 - 106.2	750	0.75	1.7	143	18	8	3.8	8	1/4	74	8431 0269 19*
LUF34 HRD04	8.0 - 18.0	71 - 160	440	1.2	2.6	212	20	9	19	10	1/4	79	8431 0311 22*
LUF34 HRD08	8.0 - 11.0	71 - 97	750	1.2	2.6	212	20	9	19	10	1/4	79	8431 0311 24
LUF34 HRD16	4.0 - 8.0	35 - 71	1600	0.9	2.0	179	20	9	19	10	1/4	79	8431 0311 26
LUF34 HRD21	2.2 - 4.5	20 - 40	2000	0.9	2.0	179	20	9	19	10	1/4	79	8431 0311 28
Reversible drill, tapper and screwdriver													
COMBI22 HR10	5.0 - 10.0	44 - 89	800	1.1	2.4	240	20	7	15	8	1/4	75	8431 0255 62
COMBI22 HR5	2.7 - 5.7	24 - 50	1600	0.9	2.0	205	20	7	15	8	1/4	75	8431 0255 80
COMBI22 HR2	2.0 - 2.7	18 - 24	3600	0.9	2.0	205	20	7	15	8	1/4	75	8431 0255 89
COMBI34 HR04	8.0 - 18.0	71 - 160	400	1.5	3.3	228	20	9	19	10	1/4	79	8431 0311 32
COMBI34 HR08	8.0 - 11.0	71 - 97	750	1.3	2.9	218	20	9	19	10	1/4	79	8431 0311 34
COMBI34 HR16	4.0 - 8.0	35 - 71	1600	1.0	2.2	179	20	9	19	10	1/4	79	8431 0311 36

All models: Are reversible.
Female hexagon drive for bits: 1/4" on pistol grip models.
Combi-tools are delivered with drill chuck and 1/4" female hex drive for bits.
Torque at min 3 bar and max 6 bar.

* Basic tools of the range, cover most needs.

ACCESSORIES INCLUDED
Page 43

OPTIONAL ACCESSORIES
Page 43

SELECTED SERVICE KITS
Page 43

OPTIONAL ACCESSORIES

Designation	Exhaust hose	Support handle	ESD hose	Torque arms adapters	Installation proposal	ESD approved pistol handle
LUM12 HRX/HRF	4210 2052 00	4110 1355 92	8202 0501 06	–	8202 1180 67	4210 3616 04
LUM22 HR 3, 4, 6	4210 2052 00	4110 1355 92	8202 0501 10	–	8202 1180 77	4210 4337 04
LUM22 HR 10, 12	4210 2052 00	4110 1355 93	8202 0501 10	–	8202 1180 77	4210 4337 04
LUM22 HRX 3, 4, 6	4210 2052 00	4110 1355 92	8202 0501 10	–	8202 1180 77	4210 3616 04
LUM22 HRX 10, 12	4210 2052 00	4110 1355 93	8202 0501 10	–	8202 1180 77	4210 3616 04
LUM32 HR	4210 2052 00	4110 1355 94	8202 0501 10	–	8202 1180 77	4210 4337 04
LUM12 SR	4210 2052 00	–	8202 0501 06	4390 1735 52	8202 1180 67	–
LUM12 PR	4210 2052 00	–	8202 0501 06	4390 1735 53	8202 1180 67	–
LUM22 SR	4210 2053 00	–	8202 0501 10	4390 1735 51	8202 1180 77	–
LUM22 PR	4210 2053 00	–	8202 0501 10	4390 1735 54	8202 1180 77	–
LTV009	4210 2052 00	–	8202 0501 06	–	8202 1180 67	–
LUF34	4210 2053 00	4110 1355 82	8202 0501 10	–	8202 1180 77	–

ACCESSORIES INCLUDED

Clutch adjustment key
Included with all shut-off and slip clutch tools

Quick change chuck
Included with all straight and pistol grip tools except LUF14

Suspension yoke
For LTV009, Ordering No. 4210 4461 80

Exhaust hose
Included with straight and air-on-top models

Hose nipple
Included with all tools

OPTIONAL ACCESSORIES

Quick change chuck kit
Extra wide diameter for easy handling
Ordering No. 4210 2326 91

Angle-head for LTV009
90° hex drive magnetic bitholder, substitute for 4210 3857 XX angle heads
Ordering No. 4210 3857 91

Extended lever for LTV18
Ordering No. 4210 2306 02

SELECTED SERVICE KITS
The spare parts included in the service kits cover a normal overhaul of your tool. Always have them available for a fast and economical repair.

Main parts included:

- Vane kit
- Motor bearings
- Gaskets
- O-rings
- Circlips
- Pins etc.

OPTIONAL ACCESSORIES for LUM25 HRF models

Model	Ordering No.
Swivel, hose dia 8 mm	4210 3134 80
Handle small size	4210 3139 00
Hose reel balancer, HRIL 4	8202 0600 29

OPTIONAL ACCESSORIES

Model	Ordering No.
Threaded clutch houses	
LUM12 PR/SR 1, 2, 3, 4	4210 4386 04
LUM12 HRX/HRF 1, 3, 5, 8	4210 4386 04
LUM21 SR/PR	4210 2933 82
LUM22 HRX/HR 2, 3, 4, 6	4210 4386 04
LUM22 HRX/HR 10, 12	4210 4392 03
LUM22 SR/PR 3, 4, 5, 6	4210 4383 04
LUM22 SR/PR 10, 12	4210 4383 03
Angle head covers	
LTV009 R025-R07	4210 4115 00
LTV009 R08-R11	4210 4116 00
Protective covers	
LUM22/32 HR	4210 3150 00
LUM22/25 HRX	4210 3151 00
LUM12 HRX	4210 4642 00

Service kits for screwdrivers

Model	Ordering No.
LUM12 HRX, HRF	4081 0247 90
LUM22 HR/HRX 3, 4, 6, 12	4081 0281 90
LUM22 HR/HRX 10	4081 0282 90
LUM32 HR	4081 0316 90
LUM12 SR	4081 0254 90
LUM12 PR	4081 0250 90
LUM22 PR/SR 3, 4, 6, 12	4081 0284 90
LUM22 PR/SR 10	4081 0285 90
LUM10 PR	4081 0070 90
LUM21 PR	4081 0071 90
LUM21 SR-U	4081 0072 90
LUM25 HRF	4081 0075 90
TWIST HRF	4081 0079 90
LUF34 HR	4081 0086 90
TWIST VR	4081 0078 90
LTV08	4081 0084 90
LTV009	4081 0248 90
LTV18	4081 0085 90

RE-Conversion kits for LUM/LTV models

Model	Ordering No.
LUM12 HRF	4210 3624 99
LUM12 SR	4210 4137 90
LUM22 SR	4210 4023 90
LUM21 SR	4210 2912 92
LTV08	4210 4022 90
LTV009	4210 4137 90
LTV18	4210 4023 90

NUTRUNNERS

Power, speed, accuracy and complete easy handleness

An unbeatable combination of power, speed and accuracy are the main criterias for Atlas Copco´s range of nutrunners.

Those criterias make the Atlas Copco nutrunners a unique choice:

- **Power** – A high power output in relation to weight and dimension is decisive for productivity, i.e. the combined performance of operator and tool.
- **Speed** – Atlas Copco nutrunners have speed optimised for every torque capacity rating.
- **Accuracy** – The constantly high accuracy, a matter of balance between speed and clutch response, decides torque repeatability independently of joint characteristics.
- **Ergonomics** – The low weight, thermally insulated grip and low noise and vibration levels are all factors that help to reduce operator fatigue. This raises individual performance and contributes to higher overall productivity in your plant.
- **Complete easy handleness** – Simplicity in selection and installation allows you to set the torque once and that is the torque you will get, joint after joint, without complicated analyses.

It is easy to choose the right tool – no joint is too complicated for a nutrunner. To set the torque – just adjust it to the required level, regardless of joint conditions.

Our wide range of nutrunners consists of the three main categories:

- **Angle nutrunners**
- **Straight nutrunners**
- **Pistol grip nutrunners**

These versions are also available in optional models such as torque monitored, crowfoot, Hold and Drive, Flush socket etc.

ANGLE NUTRUNNERS

Productivity and accuracy
Bolt capacity M2.5 – M22

Speed and accuracy – two key performance factors successfully combined in the LTV 9 and LTV 8 angle nutrunner range from Atlas Copco. Consistently accurate, high-speed tightening is complemented by advanced ergonomic design, ensuring a level of unmatched productivity. All this together in a tool that is very easy to handle.

Easy to choose, easy to set, easy to run. Nutrunners from Atlas Copco will help you solve your tightening problems.

- **Accurate every time** – the clutch shuts off at the same torque, tightening after tightening.
- **Hard or soft joint** – do not bother, the tool gives the torque you adjust it for, independent of joint variations.
- **Air pressure fluctuations** – The torque accuracy is unaffected by variations in air pressure and lubrications.
- **Highest productivity** – Instant disengagement of the clutch keeps torque over-shoot to a minimum even on the fastest tools. New models developed to meet the most extreme requirements on operational speeds.
- **Less operator fatigue** – Well balanced, slim and comfortable handle combined with extremely low reaction forces.
- **Reliability** – Certified for accuracy and durability by major car manufacturers.
- **Job verification** – For remote indication of clutch release function the tools can be equipped with air signal outlet – RE. Often used for counting the number of fasteners in a tightening cycle.
- **Electronic monitoring** – Most tools in the range can be equipped with integrated electronics for monitoring applications.

ANGLE NUTRUNNERS

Torque control and flush socket tools

LTV29 series

The new LTV29 is specially designed for high speed and small dimensions in combination with outstanding ergonomics. The slim lightweight design, the soft comfortable grip, easy reverse and low reaction force makes this tool type exceptionally easy to use.

LTV39 series

The new LTV39 series has the fastest nutrunners of their type. The powerful motor, consistently high accuracy and many operator-friendly features give these tools the capability to boost your productivity to higher levels than ever.

LTV FS flush socket tools

A good solution for access problems where minimum angle head size and high torque accuracy is required. The flush socket tools have integrated sockets to achieve a reduced angle head height.

Model	Bolt size mm	Square drive in	Socket size mm	Torque range soft joint Nm	Torque range soft joint ft lb	Free speed r/min	Weight kg	Weight lb	Length mm	Angle head height mm	Angle head centre to side mm	Air consumption at free speed l/s	Air consumption at free speed cfm	Rec. hose size mm	Air inlet thread in	Sound level dB(A)	Ordering No.
Reversible models																	
LTV29 R12-Q	M6	1/4[a]	–	6 - 12	4.5 - 9	850	1.3	2.9	351	44	11	10	21	10	1/4	77	8431 0621 17
LTV29 R12-42	M6	1/4[b]	–	6 - 12	4.5 - 9	850	1.3	2.9	351	34	11	10	21	10	1/4	77	8431 0621 18
LTV29 R12-6	M6	1/4	–	6 - 12	4.5 - 9	850	1.3	2.9	351	27	11	10	21	10	1/4	77	8431 0621 15
LTV29 R12-10	M6	3/8	–	6 - 12	4.5 - 9	850	1.3	2.9	351	27	11	10	21	10	1/4	77	8431 0621 16
LTV29 R16-Q	M6	1/4[a]	–	9 - 16	7 - 12	850	1.3	2.9	351	44	11	10	21	10	1/4	77	8431 0621 24
LTV29 R16-42	M6	1/4[b]	–	9 - 16	7 - 12	850	1.3	2.9	351	34	11	10	21	10	1/4	77	8431 0621 23
LTV29 R16-6	M6	1/4	–	9 - 16	7 - 12	850	1.3	2.9	351	27	11	10	21	10	1/4	77	8431 0621 22
LTV29 R16-10	M6	3/8	–	9 - 16	7 - 12	850	1.3	2.9	351	27	11	10	21	10	1/4	77	8431 0621 21
LTV29 R24-10	M8	3/8	–	12 - 24	9 - 18	640	1.4	3.1	374	30	14	10	21	10	1/4	77	8431 0621 29
LTV29 R30-10	M8	3/8	–	15 - 30	11 - 22	500	1.4	3.1	374	30	14	10	21	10	1/4	77	8431 0621 37
LTV39 R16-10	M6	3/8	–	7 - 16	5 - 12	1200	1.5	3.3	375	27	11	16	34	10	1/4	78	8431 0623 09
LTV39 R24-10	M8	3/8	–	12 - 24	9 - 18	870	1.6	3.5	385	30	14	16	34	10	1/4	78	8431 0623 14
LTV39 R30-10	M8	3/8	–	15 - 30	11 - 22	870	1.6	3.5	385	35	14	16	34	10	1/4	78	8431 0623 19
LTV39 R48-10	M8	3/8	–	24 - 48	18 - 35	560	1.7	3.7	405	35	18	16	34	10	1/4	78	8431 0623 27
LTV39 R48-13	M8	1/2	–	24 - 48	18 - 35	560	2.0	4.4	425	41	20	16	34	10	1/4	78	8431 0623 43
LTV39 R56-10	M10	3/8	–	28 - 56	21 - 41	460	1.7	3.7	405	35	18	16	34	10	1/4	78	8431 0623 35
LTV39 R56-13	M10	1/2	–	28 - 56	21 - 41	460	2.0	4.4	425	41	20	16	34	10	1/4	78	8431 0623 51
LTV39 R70-13	M10	1/2	–	35 - 70	26 - 51	350	2.1	4.6	425	41	20	16	34	10	1/4	78	8431 0623 59
LTV39 R85-13	M10-12	1/2	–	43 - 85	32 - 63	305	2.5	5.5	500	52	25	16	34	10	1/4	78	8431 0623 67
Flush socket angle nutrunners LTV FS. Reversible models																	
LTV29 R30 FS	M8	–	13	15 - 30	11 - 22	500	1.3	3.1	355	34	15	10	21	10	1/4	77	8431 0622 38
LTV39 R48 FS	M8	–	13	24 - 48	18 - 35	560	1.7	3.7	406	40	18	16	34	10	1/4	78	8431 0622 42
LTV39 R56 FS	M8	–	13	28 - 56	21 - 41	460	1.7	3.7	406	40	18	16	34	10	1/4	78	8431 0622 46
LTV39 R70 FS	M10	–	16	35 - 70	26 - 51	350	2.1	4.6	425	50	20	16	34	10	1/4	78	8431 0622 51
LTV39 R85 FS	M10-12	–	19	43 - 85	32 - 63	305	2.5	5.5	500	70	25	16	34	10	1/4	78	8431 0622 58

[a] Quick change chuck.
[b] Female hex drive.

NOTE: Socket mounted according to table above, other sizes available according to page 49.

ACCESSORIES INCLUDED
Hose fitting
Clutch adjustment key

OPTIONAL ACCESSORIES
Page 56

SELECTED SERVICE KITS
Page 56

ANGLE NUTRUNNERS

Torque control and flush socket tools

LTV28 and 38 series

The LTV28 and 38 series offers the highest reliability when tightening M5-M12 screws. Small, durable gears in combination with a precise clutch and reliable motor put this tool at the top master of its class.

LTV46 and 48 series – the flexible choice for higher torques

The LTV46 and 48 series are robust and reliable tools – and they are reversible for torques up to 200 Nm. Low weight and smooth handles makes them pleasant to use. Suitable reaction bars and other accessories are available.

LTV FS flush socket tools

A good solution for access problems where minimum angle head size and high torque accuracy is required. The flush socket tools have integrated sockets to achieve a reduced angle head height.

The LTV FS nutrunners are based on the LTV range of angle nutrunners and offer the same tightening characteristics. They have the same motor, clutch and gear parts as the LTV range.

Model	Bolt size mm	Square drive in	Socket size mm	Torque range soft joint Nm	Torque range soft joint ft lb	Free speed r/min	Weight kg	Weight lb	Length mm	Angle head height mm	Angle head centre to side mm	Air consumption at free speed l/s	Air consumption at free speed cfm	Rec. hose size mm	Air inlet thread in	Sound level dB(A)	Ordering No.
Reversible models																	
LTV28 R07-6	M5	1/4	–	2.5 - 7	1.8 - 5	1100	1.3	2.9	334	28.5	10	8	17	8	1/4	76	8431 0601 65
LTV28 R07-42	M5	1/4[a]	–	2.5 - 7	1.8 - 5	1100	1.3	2.9	334	28.5	10	8	17	8	1/4	76	8431 0601 73
LTV28 R07-Q	M6	1/4[b]	–	2.5 - 7	1.8 - 5	1100	1.3	2.9	334	28.5	10	8	17	8	1/4	76	8431 0601 68
LTV28 R15-6	M6	1/4	–	7 - 15	5 - 11	560	1.4	3.1	349	28	11	10	21	10	1/4	76	8431 0601 52
LTV28 R15-42	M6	1/4[a]	–	7 - 15	5 - 11	560	1.4	3.1	349	28	11	10	21	10	1/4	76	8431 0601 58
LTV28 R15-Q	M6	1/4[b]	–	7 - 15	5 - 11	560	1.4	3.1	349	28	11	10	21	10	1/4	76	8431 0601 53
LTV28 R15-10	M6	3/8	–	7 - 15	5 - 11	560	1.4	3.1	349	28	11	10	21	10	1/4	76	8431 0601 55
LTV28 R20-10	M6	3/8	–	10 - 19	7 - 15	530	1.4	3.1	355	34.5	13.5	10	21	10	1/4	76	8431 0601 50
LTV28 R20-42	M6	1/4[a]	–	10 - 20	7 - 15	420	1.4	3.1	350	34	13.5	10	21	10	1/4	76	8431 0601 48
LTV28 R28-10	M8	3/8	–	14 - 28	10 - 21	340	1.4	3.1	350	29.5	13.5	10	21	10	1/4	76	8431 0601 40
LTV28 RL28-10	M8	3/8	–	14 - 28	10 - 21	80	1.4	3.1	350	29.5	13.5	10	21	10	1/4	76	8431 0601 33
Non-reversible models																	
LTV28 N11-6	M5-6	1/4	–	5 - 11	4 - 8	1250	1.2	2.6	305	28	11	11	23	10	1/4	76	8431 0600 06
LTV28 N11-42	M5-6	1/4[a]	–	5 - 11	4 - 8	1250	1.2	2.6	305	28	11	11	23	10	1/4	76	8431 0600 17
LTV28 N11-Q	M5-6	1/4[b]	–	5 - 11	4 - 8	1250	1.2	2.6	305	28	11	11	23	10	1/4	76	8431 0600 13
LTV28 N11-10	M5-6	3/8	–	5 - 11	4 - 8	1250	1.2	2.6	305	28	11	11	23	10	1/4	76	8431 0600 10
LTV28 N15-10	M6	3/8	–	7 - 15	5 - 11	950	1.2	2.6	305	29.5	13.5	11	23	10	1/4	76	8431 0600 99
LTV28 N22-10	M6	3/8	–	11 - 22	8 - 16	620	1.3	2.9	330	34.5	13.5	11	23	10	1/4	76	8431 0600 87
LTV28 N28-10	M8	3/8	–	14 - 28	10 - 21	500	1.3	2.9	325	29.5	13.5	11	23	10	1/4	76	8431 0600 84
LTV28 N30-10	M8	3/8	–	15 - 30	11 - 22	400	1.3	2.9	325	29.5	13.5	11	23	10	1/4	76	8431 0600 81
Reversible models																	
LTV38 R42-10	M8	3/8	–	20 - 42	15 - 31	400	2.0	4.4	436	34.5	18	16	34	10	1/4	80	8431 0603 55
LTV38 R42-13	M8	1/2	–	20 - 42	15 - 31	400	2.2	4.8	453	41	20	16	34	10	1/4	80	8431 0603 69
LTV38 R50-10	M10	3/8	–	25 - 50	18 - 36	330	2.0	4.4	436	34.5	18	16	34	10	1/4	80	8431 0603 63
LTV38 R50-13	M10	1/2	–	25 - 50	18 - 36	330	2.2	4.8	453	41	20	16	34	10	1/4	80	8431 0603 71
LTV38 R57-13	M10	1/2	–	30 - 57	22 - 41	280	2.2	4.8	453	41	20	16	34	10	1/4	80	8431 0603 51
LTV38 R70-13	M10	1/2	–	34 - 70	24 - 50	225	2.4	5.3	487	41	20	16	34	10	1/4	80	8431 0603 46
LTV38 R85-13	M10-12	1/2	–	40 - 85	29 - 61	190	2.8	6.1	530	52	25	16	34	10	1/4	80	8431 0603 38
Non-reversible models																	
LTV38 N31-10	M8	3/8	–	18 - 31	13 - 23	800	1.7	3.7	400	34.5	13.5	20	42	10	1/4	80	8431 0602 04
LTV38 N45-10	M8	3/8	–	22 - 45	16 - 33	520	1.8	4.0	410	34.5	18	20	42	10	1/4	80	8431 0602 06
LTV38 N55-10	M10	3/8	–	30 - 55	22 - 40	440	1.8	4.0	410	34.5	18	20	42	10	1/4	80	8431 0602 14
LTV38 N55-13	M10	1/2	–	30 - 55	22 - 40	440	2.0	4.4	427	41	20	20	42	10	1/4	80	8431 0602 22
LTV38 N68-13	M10	1/2	–	30 - 68	22 - 40	370	2.0	4.4	427	41	20	20	42	10	1/4	80	8431 0602 48
LTV38 N85-13	M10	1/2	–	40 - 85	29 - 63	300	2.2	4.8	460	41	20	20	42	10	1/4	80	8431 0602 52
LTV38 N100-13	M12	1/2	–	50 -100	37 - 74	250	2.6	5.7	503	52	25	20	42	10	1/4	80	8431 0602 59

[a] Female hex drive.
[b] Quick change chuck.
[c] Double square drive is available as optional for LTV46.
Torque range is achieved at min 5 bar on LTV46.

Continued....

ACCESSORIES INCLUDED

Hose fitting
Clutch adjustment key

OPTIONAL ACCESSORIES

Page 56

SELECTED SERVICE KITS

Page 56

ANGLE NUTRUNNERS

Torque control and flush socket tools

Model	Bolt size mm	Square drive in	Socket size mm	Torque range soft joint Nm	Torque range soft joint ft lb	Free speed r/min	Weight kg	Weight lb	Length mm	Angle head height mm	Angle head centre to side mm	Air consumption at free speed l/s	Air consumption at free speed cfm	Rec. hose size mm	Air inlet thread in	Sound level dB(A)	Ordering No.
Reversible models																	
LTV48 R65-13	M10	1/2	–	40- 65	29- 47	380	3.1	6.7	550	41	20	28	59	12.5	1/2	82	8431 0534 82
LTV48 R120-L13	M12	1/2	–	70- 120	51- 88	215	3.5	7.6	590	52	25	28	59	12.5	1/2	82	8431 0534 88
LTV48 R150-L13	M12	1/2	–	70- 150	51-111	170	3.5	7.6	590	52	25	28	59	12.5	1/2	82	8431 0534 93
LTV48 R200-L13	M14	1/2	–	115- 200	85-148	100	3.8	8.3	610	52	25	28	59	12.5	1/2	82	8431 0534 98
Flush socket angle nutrunners LTV FS. Reversible models																	
LTV28 R20 FS	M6	–	13	8- 20	6- 15	500	1.4	3.1	352	34	13.5	10	21	10	1/4	76	8431 0608 02
LTV28 R28 FS	M8	–	13	14- 28	10- 21	340	1.4	3.1	350	34	13.5	10	21	10	1/4	76	8431 0608 00
LTV38 R50 FS	M10	–	15	25- 50	18- 37	360	2.2	4.8	454	53	20	18	38	10	1/4	80	8431 0609 85
LTV38 R65 FS	M12	–	16	34- 65	25- 48	280	2.6	5.7	515	53	20	18	38	10	1/4	80	8431 0609 87
LTV48 R65 FS	M10	–	16	30- 65	22- 48	400	3.1	6.7	550	53	20	28	59	12.5	1/2	82	8431 0610 08
LTV48 R120 FS	M12	–	19	70- 120	37- 88	220	3.5	7.6	590	70	25	28	59	12.6	1/2	82	8431 0610 12
LTV48 R150 FS	M12	–	19	70- 150	44- 111	180	3.5	7.6	590	70	25	28	59	12.7	1/2	82	8431 0610 17
LTV48 R200 FS	M14	–	19	115- 200	85-148	100	3.8	8.3	610	70	25	28	59	12.8	1/2	82	8431 0610 21
Non-reversible models																	
LTV38 N55 FS	M10	–	15	30- 55	22- 40	440	2.0	4.4	441	53	20	20	42	10	1/4	80	8431 0609 89
LTV38 N85 FS	M10	–	15	40- 85	29- 63	300	2.2	4.8	460	53	20	20	42	10	1/4	80	8431 0609 93

[a] Female hex drive.
[b] Quick change chuck.
[c] Double square drive is available as optional for LTV46.

Torque range is achieved at min 5 bar on LTV46.
NOTE: Socket mounted according to table above, other sizes available according to page 49.

LTV58 series

LTV58 incorporates a twin motor for high rundown speed and accurate tightening. These tools are intended for the highest torques as well as cramped spaces. Screw sizes from M16 up to M22.

Model	Bolt size mm	Square drive in	Torque range soft joint Nm	Torque range soft joint ft lb	Free speed r/min	Weight kg	Weight lb	Length mm	Angle head height mm	Angle head centre to side mm	Air consumption at free speed l/s	Air consumption at free speed cfm	Rec. hose size mm	Air inlet thread in	Sound level dB(A)	Ordering No.
Reversible models																
LTV58 R180-13	M16	1/2	85 - 180	63 - 133	540	4.4	9.7	595	55	25	19	40	10	1/2	79	8431 0529 04
LTV58 R200-13	M16	1/2	130 - 200	111 - 148	320	4.4	9.7	595	55	25	19	40	10	1/2	79	8431 0529 09
LTV58 R350-19	M18	3/4	160 - 350	148 - 259	240	7.5	16.5	604	72	34	19	40	10	1/2	79	8431 0529 15
LTV58 R575-25	M22	1	280 - 575	196 - 426	180	10.4	22.9	686	81	54	19	40	10	1/2	79	8431 0529 21
Non-reversible models																
LTV58 N180-13	M16	1/2	85 - 180	63 133	540	4.4	9.7	595	55	25	19	40	10	1/2	79	8431 0529 18
LTV58 N200-13	M16	1/2	130 - 200	111 - 148	320	4.4	9.7	595	55	25	19	40	10	1/2	79	8431 0529 24
LTV58 N350-19	M18	3/4	160 - 350	148 - 259	240	7.5	16.5	604	72	34	19	40	10	1/2	79	8431 0529 29
LTV58 N575-25	M22	1	280 - 575	196 - 426	180	10.4	22.9	686	81	54	19	40	10	1/2	79	8431 0529 34

Signal connection kit

Page 56

ACCESSORIES INCLUDED

Hose fitting
Clutch adjustment key
Reaction bar/bracket (only for LTV58)

OPTIONAL ACCESSORIES

Page 56

SELECTED SERVICE KITS

Page 56

Integrated sockets – LTV28 R20 FS/R28 FS/XX R28 FS and LTV29 R30 FS

Width across flats mm/in	Socket extension mm	Socket diameter mm	Socket type	Bit lock principle	Ordering No.
10	0	17.9	HEX		4220 1589 10
10	15	17.9	HEX		4220 1589 20
13	0	17.9	HEX		4220 1589 13
13	2	17.9	HEX		4220 1589 33
13	5	17.9	HEX		4220 1589 23
13	15	17.9	HEX		4220 1589 34
6.35=1/4"	0	17.9	HEX, bit holder	magnet	4220 3354 14
8=5/16"	0	17.9	HEX, bit holder	magnet	4220 3354 08

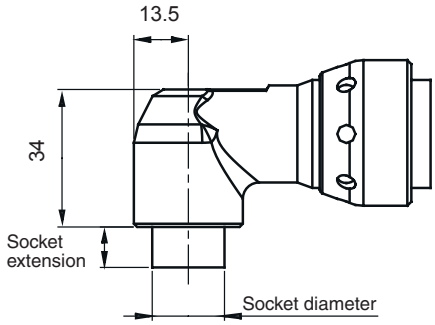

Integrated sockets – LTV38 R50 FS/N55 FS, LTV39 R48 FS and LTV39 R56 FS

Width across flats mm/in	Socket extension mm	Socket diameter mm	Socket type	Bit lock principle	Ordering No.
12.7=1/2"	0.1	20.9	HEX		4220 1676 33
13	0.1	20.9	HEX		4220 1676 01
13	10.1	20.9	HEX		4220 1676 13
13	21.1	20.9	HEX		4220 1676 23
14	0.1	20.9	HEX		4220 1676 14
15	0.1	20.9	HEX		4220 1676 15
7.95=5/16"	0.1	20.9	HEX	special	4220 1676 04
8=5/16"	12.1	20.9	HEX	special	4220 1676 06

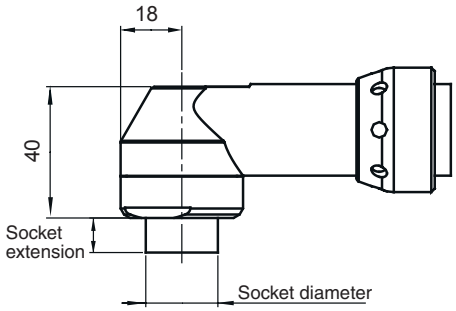

Integrated sockets – LTV38 R65/N85 FS, LTV39 R70 FS, and LTV48 R65 FS

Width across flats mm/in	Socket extension mm	Socket diameter mm	Socket type	Bit lock principle	Ordering No.
10	3.3	27.5	HEX		4220 1621 04
11	2.8	27.5	HEX	Side hole	4220 0815 01
12	3.3	27.5	HEX		4210 2749 03
13	3.3	27.5	HEX		4210 2749 01
14	3.3	27.5	HEX		4210 2749 04
15	1.3	27.5	HEX		4220 1621 01
15	3.3	27.5	HEX		4210 2749 02
15	8.3	27.5	HEX	Special	4210 2749 10
15	16.3	27.5	HEX		4220 1621 00
16	0.5	27.5	HEX		4220 1251 00
16	4.3	27.5	HEX		4210 2882 01
17	4.3	27.5	HEX		4210 2882 02
18	4.3	27.5	HEX		4210 2882 03
7/16"	3.3	27.5	HEX		4210 2749 06
9/16"	3.3	27.5	HEX		4210 2749 05

Other dimensions on request.

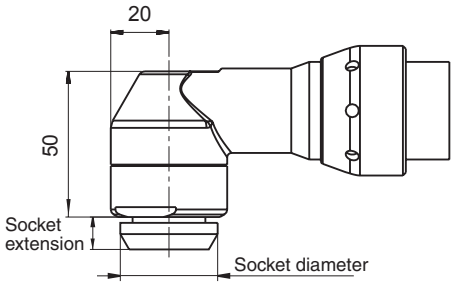

Integrated sockets – LTV39 R85 FS and LTV48 R120 FS/R150 FS/R200 FS

Width across flats mm	Socket extension mm	Socket diameter mm	Bit lock principle	Ordering No.
Hex				
15	6.5	37.5	SF	4210 3534 15
17	8.5	37.5	SF	4210 3534 17
18	2	37.5	SF	4210 3534 68
18	5.5	41.5	SF	4220 1595 02
18	8.5	37.5	SF	4210 3534 18
19	9.5	37.5	SF	4210 3534 19
21	10.5	37.5	SF	4210 3534 21
22	10.5	37.5	SF	4210 3534 22
24	10.5	37.5	SF	4210 3534 24
24	13.5	41.5	SF	4220 1595 01
27	13.8	40.5	SF	4210 3534 27
Female Torx				
E-10	5.5	37.5	Female TX	4210 3534 30
E-12	5.5	37.5	Female TX	4210 3534 32
E-14	5.5	37.5	Female TX	4210 3534 34
E-16	5.5	37.5	Female TX	4210 3534 36
E-18	5.5	37.5	Female TX	4210 3534 38
E-20	5.5	37.5	Female TX	4210 3534 40
E-20	8.5	40.5	Female TX	4220 2044 01

Other dimensions on request.

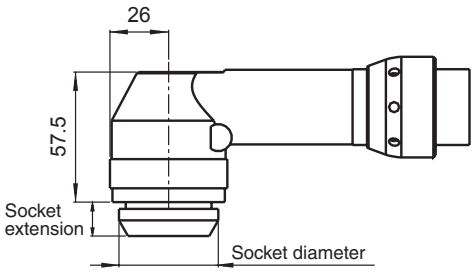

ANGLE NUTRUNNERS

Angle, stall type – Ratchet wrenches – Worm drive

Angle nutrunners, stall type

Bolt capacity M6

- **Independent of joint variation** – Low inertia design gives accurate torque independent of joint stiffness, in other words low mean shift.
- **Easy torque setting** – by adjusting the inlet air pressure.
- **Reliable** – well-proven design.
- **Good accessibility** – due to small dimensioned angle head.

Ratchet wrenches

Bolt capacity M8 – M10

- **Unique accessibility** – The ratchet wrench is a superior tool for limited space applications.
- **To loosen** – turn the tool upside down.

Worm-drive nutrunners

Bolt capacity M8 – M12

- **Teasing throttle characteristics** – Give you a significantly reduced free speed. The worm-drive nutrunners are suitable for:

- Nutrunning
- Tapping
- Light reaming
- Tube-rolling

They can also be used for incorporation in rigs as air motors for intermittent operation.

Model	Bolt size mm	Square drive in	Torque range soft joint at 6.3 bar Nm	ft lb	at 3 bar Nm	ft lb	Free speed r/min	Weight kg	lb	Length mm	Angle head height mm	Angle head centre to side mm	Air consumption at free speed l/s	cfm	Rec. hose size mm	Air inlet thread in	Sound level dB(A)	Ordering No.
Angle nutrunners stall type, reversible model																		
LMV28 R11-10	M6	3/8	11	8	5	4	1200	1.1	2.4	264	28	11	10	21	10	1/4	76	8431 0591 07
LMV28 R14-10	M6	3/8	14	10	7	5	1000	1.1	2.4	264	29.5	13.5	10	21	10	1/4	76	8431 0591 09
Angle nutrunners stall type, non reversible model																		
LMV28 N16-10	M6	3/8	16	12	8	6	1000	1.0	2.2	239	29.5	13.5	11	23	10	1/4	76	8431 0590 17
Ratchet wrenches																		
LBR33 S26/114-13	M8	13[a]	22	16	11	8	185	1.4	3.1	290	15	13	9.5	20	10	1/4	90	8431 0345 71
LBR33 S26/118-16	M8-10	16[a]	30	22	15	11	135	1.4	3.1	300	15	18	9.5	20	10	1/4	91	8431 0346 70
LBR33 S26/118-17	M8-10	17[a]	30	22	15	11	135	1.4	3.1	300	15	18	9.5	20	10	1/4	91	8431 0346 62
Worm drive nutrunners																		
LMK22 S004	M8	7/16[a]	19	14	9	7	450	1.0	2.2	240	30	31	6	13	6	1/4	90	8431 0242 26
LMK22 S002	M10	7/16[a]	23	17	11	8	200	1.0	2.2	240	30	31	6	13	6	1/4	90	8431 0242 18
LMK33 S005	M10	7/16[a]	29	21	14	10	480	1.7	3.7	263	39	41	9.5	20	10	1/4	90	8431 0343 24
LMK33 S002	M10-12	7/16[a]	32	24	16	12	235	1.9	4.2	291	39	41	9.5	20	10	1/4	90	8431 0343 16
LMK33 S001	M10-12	7/16[a]	55	41	27	20	130	2.2	4.9	385	39	41	9.5	20	10	1/4	90	8431 0343 08

[a] Female hex drive.

OPTIONAL ACCESSORIES

Socket adapters for LBR

Dimensions	Ordering No. LBR33 S26/114	Ordering No. LBR33 S26/118
1/2" hex 3/8" square drive	4090 0163 00	4090 0163 00
1/2" hex 1/2" square drive	4090 0164 00	4090 0164 00

Female hex sockets for LBR

Dimensions in	Ordering No. LBR33 S26/114	Ordering No. LBR33 S26/118	Dimensions in	Ordering No. LBR33 S26/114	Ordering No. LBR33 S26/118
1/4	4210 0360 05	–	10	4210 0414 10	–
5/16	4210 0360 02	–	12	4210 0414 12	4210 0418 12
3/8	4210 0360 03	4210 0389 02	13	4210 0414 13	4210 0418 13
7/16	4210 0360 04	4210 0389 03	14	4210 0414 14	4210 0418 14
1/2	4210 0360 01	4210 0389 04	15	4210 0414 15	4210 0418 15
9/16	–	4210 0389 06	16	–	4210 0418 16
5/8	–	4210 0389 01	17	–	4210 0418 17
3/4	–	4210 0389 05	18	–	4210 0418 18
			19	–	4210 0389 05

NOTE: That 1/2" female hex sockets must be used together with socket adapters.

ACCESSORIES INCLUDED

Hose fitting

Socket adaptor 3/8" square drive, LMK22 1/2" square drive, LMK33

SELECTED SERVICE KITS

Page 56

ANGLE NUTRUNNERS
Crowfoot type

LTC Crowfoot tools
Bolt capacity M8 – M14

A good solution in many cases of inaccessibility is the crowfoot, which has the smallest height and side to centre dimensions.

The LTC range of nutrunners is based on the LTV range of angle nutrunners and offers the same tightening characteristics. They have the same motor, clutch and gear parts as the LTV range.

The crowfoot is attached to a standard angle nutrunner LTV and can easily be adjusted ± 90° of centre line.

Model	Bolt size mm	Socket size mm	Torque range soft joint Nm	Torque range soft joint ft lb	Free speed r/min	Weight kg	Weight lb	Length mm	Air consumption at free speed l/s	Air consumption at free speed cfm	Rec. hose size mm	Air inlet thread in	Sound level dB(A)	Ordering No.
Reversible														
LTC38 R33-13-A-O-3	M8	13	16- 33	12-24	430	2.6	5.7	508	18	38	10	1/4	80	8431 0611 01
LTC38 R40-17-A-O-3	M10	17	23- 40	17-29	360	3.0	6.6	540	18	38	10	1/4	80	8431 0611 08
LTC48 R56-17-A-O-3	M10-12	17	24- 56	18-41	400	3.9	8.6	600	28	59	12.5	1/2	82	8431 0611 06
LTC48 R96-19-A-O-3	M12	19	40- 96	30-71	220	4.3	9.5	640	28	59	12.5	1/2	82	8431 0611 11
LTC48 R120-19-A-O-3	M12-14	19	48-120	36-89	180	4.3	9.5	640	28	59	12.5	1/2	82	8431 0611 15
Non-reversible														
LTC38 N41-13-A-O-3	M8	13	18- 41	13-30	520	2.4	5.3	479	20	42	10	1/4	80	8431 0611 10

DIMENSIONS

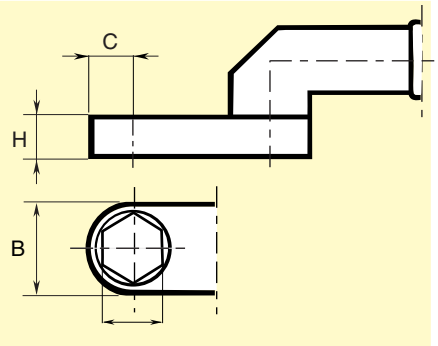

H mm	B mm	C mm
19	32	16
19	39	20
19	39	20
25	39	20
25	39	20
19	32	16
19	39	20
19	39	20
25	39	20
25	39	20
25	39	20

OPTIONAL HEX SOCKETS

For LTC38 R33/N41-13-A-O-3[a]

Width across flats mm	Width across flats in	Ordering No.
	7/16	4210 2625 03
12		4210 2625 04
	1/2	4210 2625 01
13		4210 2625 00
14		4210 2625 02
15		4210 2625 06

[a] 13 mm socket mounted on tool.

For LTC48 R96/R120-19-A-O-3[c]

Width across flats mm	Width across flats in	Ordering No.
13		4210 2624 06
14		4210 2624 05
15		4210 2624 04
16		4210 2624 03
17		4210 2624 02
18		4210 2624 01
19	3/4	4210 2624 00

[c] 19 mm socket mounted on tool.

For LTC38 R40/N48-17-A-O-3[b], LTC48 R56-17-A-O-3[b]

Width across flats mm	Width across flats in	Ordering No.
13		4210 2626 06
14		4210 2626 04
15		4210 2626 03
	1/2	4210 2626 05
	5/8	4210 2626 02
16		4210 2626 00
17		4210 2626 01
18		4210 2626 10
19		4210 2626 08

[b] 17 mm socket mounted on tool.

ANGLE NUTRUNNERS

Open end type – Torque control

8-24 mm hexagon nut capacity

Based on the well-known LTV 8 series of angle nutrunners the LTO torque control open end nutrunners offer tightening of tube nuts in high-pace line production.

Applications are mainly in the assembly of hydraulic and pneumatic brake pipes and other hose and cable connections in the automotive and aircraft industries.

The power from the air motor is transferred to the nut through a gear drive mechanism without impacting or ratcheting.

The one-hand operated two step mechanism simplifies the socket release back to open position.

Model	Socket size mm	Max socket size mm	Torque range soft joint Nm	Torque range soft joint ft lb	Free speed r/min	Weight kg	Weight lb	Length mm	Air consumption at free speed l/s	Air consumption at free speed cfm	Rec. hose size mm	Air inlet thread in	Sound level dB(A)	Ordering No.
LTO28 R12-10-L-I-3	10	10	9 -12	7- 9	430	1.9	4.2	400	10	21	10	1/4	76	8431 0612 44
LTO28 R15-10-L-I-3	10	12	9 -15	7- 11	410	1.9	4.2	400	10	21	10	1/4	76	8431 0612 46
LTO28 R17-13-L-I-3	13	14	11 -17	8- 13	340	2.0	4.4	416	10	21	10	1/4	76	8431 0612 48
LTO38 R26-13-L-I-3	13	19	13 -26	10- 19	520	3.3	7.3	529	16	34	10	1/4	80	8431 0612 50
LTO38 R26-17-L-I-3	17	24	14 -26	10- 19	570	3.4	7.5	540	16	34	10	1/4	80	8431 0612 54

OPTIONAL ACCESSORIES

Sockets

A Socket size mm	B Open end mm	Ordering No.
LTO28 R12-10-L-I-3		
5/16"	7	4210 4288 54
8 mm	7	4210 4288 55
3/8"	7	4210 4288 53
9 mm	7	4210 4288 52
10 mm	7	4210 4288 51
LTO28 R15-10-L-I-3		
8 mm	8	4210 4289 56
9 mm	8	4210 4289 55
3/8"	8	4210 4289 54
10 mm	8	4210 4289 51
11 mm	8	4210 4289 57
7/16"	8	4210 4289 58
12 mm	8	4210 4289 53
LTO28 R17-13-L-I-3		
3/8"	8.5	4210 4290 52
10 mm	8.5	4210 4290 53
11 mm	8.5	4210 4290 59
7/16"	8.5	4210 4290 54
12 mm	8.5	4210 4290 57
1/2"	8.5	4210 4290 55
13 mm	8.5	4210 4290 51
14 mm	8.5	4210 4290 58
9/16"	8.5	4210 4290 56

A Socket size mm	B Open end mm	Ordering No.
LTO38 R26-13-L-I-3		
11 mm	12.5	4210 4291 63
13 mm	12.5	4210 4291 51
14 mm	12.5	4210 4291 58
9/16"	12.5	4210 4291 53
15 mm	12.5	4210 4291 55
5/8"	12.5	4210 4291 54
16 mm	12.5	4210 4291 52
17 mm	12.5	4210 4291 60
11/16"	12.5	4210 4291 56
18 mm	12.5	4210 4291 61
19 mm	12.5	4210 4291 62
3/4"	12.5	4210 4291 57
LTO38 R26-17-L-I-3		
14 mm	14	4210 4292 55
5/8"	14.6	4210 4292 54
17 mm	16	4210 4292 51
18 mm	16	4210 4292 53
19 mm	16	4210 4292 57
3/4"	16	4210 4292 52
20 mm	16	4210 4292 61
13/16"	16	4210 4292 63
21 mm	16	4210 4292 62
22 mm	16	4210 4292 56
7/8"	16	4210 4292 58
15/16"	16	4210 4292 60
24 mm	17.2	4210 4292 59

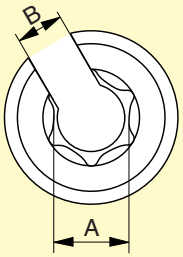

ANGLE NUTRUNNERS

Hold and drive type

Tools for hold and drive bolts
Bolt capacity M8 – M18

What used to be a two-man operation has now become a one-man task. No reaction arms.

The distinguishing feature of a hold and drive bolt is that one part is held and the other is tightened from the same side.

Hold and drive bolts are being used increasingly by, for example, truck manufacturers on the frame assembly line. The LTV HAD is especially suitable for shock absorber assembly.

Atlas Copco has developed special tools for use on hold and drive bolts based on the standard LTV series. The reaction torque is absorbed while the bolt is gripped during assembly.

The HAD sockets are available in three different lengths, special sockets are available upon request.

Also suitable for break away bolts, Hi Lok/Hi Shear.

NOTE: The screw must be strong enough to carry the final torque.

Model	Bolt size mm	Square drive in	Torque range soft joint[a] Nm	Torque range soft joint[a] ft lb	Free speed r/min	Weight kg	Weight lb	Length mm	Angle head height mm	Angle head centre to side mm	Air consumption at free speed l/s	Air consumption at free speed cfm	Rec. hose size mm	Air inlet thread in	Sound level dB(A)	Ordering No.
LTV38 R40 LT HAD[b]	M8-10	–	15- 40	11- 30	210	3.0	6.5	530	52	25	10	16	10	1/4	80	8431 0609 52
LTV38 R42 HAD	M8	–	20- 42	15- 31	430	2.2	4.8	453	41	20	10	16	10	1/4	80	8431 0603 75
LTV38 R50 HAD	M10	–	25- 50	18- 36	360	2.2	4.8	453	41	20	10	16	10	1/4	80	8431 0603 82
LTV38 R85 HAD	M10-12	–	40- 85	30- 67	210	3.0	6.5	530	52	25	10	16	10	1/4	80	8431 0609 58
LTV48 R120 HAD	M12-14	–	70- 120	52- 89	220	3.3	7.3	590	70	25	28	59	12.5	1/2	82	8431 0610 26
LTV48 R150 HAD	M14	–	70- 150	52- 111	180	3.3	7.3	590	70	25	28	59	12.5	1/2	82	8431 0610 30
LTV48 R200 HAD	M14	–	115- 200	85- 150	100	3.3	7.3	610	70	25	28	59	12.5	1/2	82	8431 0610 32
LTV58 R350 HAD	M18	–	160- 350	150- 260	240	6.4	14.1	604	72	34	19	40	10	1/2	82	8431 0529 65

[a] At min 5 bar.
[b] For low torque applications.

NOTE: Sockets and holders have to be ordered separately see page 54.
Other types of Hold and Drive equipped tools are available on special request.

ACCESSORIES INCLUDED
Hose fitting
Clutch adjustment key

OPTIONAL ACCESSORIES
Page 56

SELECTED SERVICE KITS
Page 56

Nut socket – LTV38 R42-HAD/LTV38 R50-HAD (Fig. 1)

Width across flats W mm	Socket Ø D mm	Ordering No. A	Ordering No. B	Ordering No. C
10	22	4220 1769 16	4220 1769 31	4220 1769 51
11	22	4220 1769 15	4220 1769 32	4220 1769 52
12	22	4220 1769 13	4220 1769 33	4220 1769 53
13	22	4220 1769 09	4220 1769 12	4220 1769 54
14	22	4220 1769 05	4220 1769 35	4220 1769 08
15	22	4220 1769 14	4220 1769 36	4220 1769 56
16	25	4220 1888 71	4220 1888 81	4220 1888 91
17	25	4220 1888 72	4220 1888 82	4220 1888 92
18	26	4220 1888 73	4220 1888 83	4220 1888 93
19	27	4220 1888 74	4220 1888 84	4220 1888 94
20	31	4220 1888 75	4220 1888 85	4220 1888 95
21	31	4220 1888 76	4220 1888 86	4220 1888 96

Measurements in mm

Figure 1

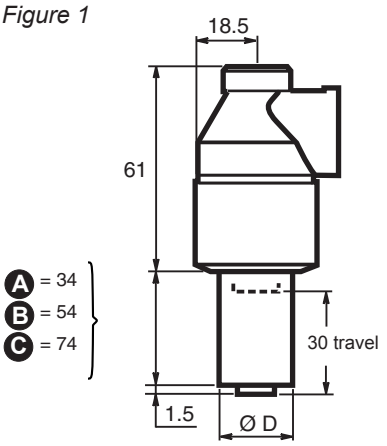

Nut socket – LTV38 R40 LT/R 85 HAD and LTV48 HAD (Fig. 2)

Width across flats W mm	Socket Ø D mm	Ordering No. A	Ordering No. B	Ordering No. C
13	30	4210 3513 13	4210 3513 33	4210 3513 53
14	30	4210 3513 14	4210 3513 34	4210 3513 54
15	30	4210 3513 15	4210 3513 35	4210 3513 55
16	30	4210 3513 16	4210 3513 36	4210 3513 56
17	30	4210 3513 17	4210 3513 37	4210 3513 57
18	31	4210 3513 18	4210 3513 38	4210 3513 58
19	32	4210 3513 19	4210 3513 39	4210 3513 59
21	35	4210 3513 21	4210 3513 41	4210 3513 61
22	35	4210 3513 22	4210 3513 42	4210 3513 62
24	35	4210 3513 24	4210 3513 44	4210 3513 64

Figure 2

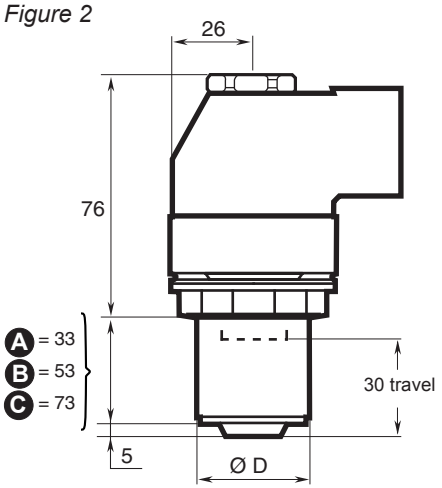

Nut socket – LTV58 R350-HAD (Fig. 3)

Width across flats W mm	Socket Ø D mm	Ordering No. A	Ordering No. B	Ordering No. C
18	41	4220 1778 04	4220 1778 14	4220 1778 24
19	41	4220 1778 05	4220 1778 15	4220 1778 25
20	41	4220 1778 06	4220 1778 16	4220 1778 26
21	41	4220 1778 07	4220 1778 17	4220 1778 27
22	41	4220 1778 08	4220 1778 18	4220 1778 28
23	41	4220 1778 09	4220 1778 19	4220 1778 29
24	41	4220 1778 01	4220 1778 11	4220 1778 21
25	41	4220 1778 02	4220 1778 12	4220 1778 22
25.4=1"	41	4220 1778 10	4220 1778 20	4220 1778 30
26	41	4220 1778 03	4220 1778 13	4220 1778 23
27	46	–	4220 2139 84	4220 2139 94
28	46	–	4220 2139 83	4220 2139 93
29	46	–	4220 2139 82	4220 2139 92
30	46	–	4220 2139 81	4220 2139 91
31	54	–	4220 2297 81	4220 2297 91
32	54	–	4220 2297 82	4220 2297 92
33	54	–	4220 2297 83	4220 2297 93
34	54	–	4220 2297 84	4220 2297 94
35	54	–	4220 2297 85	4220 2297 95
36	54	–	4220 2297 86	4220 2297 96

Figure 3

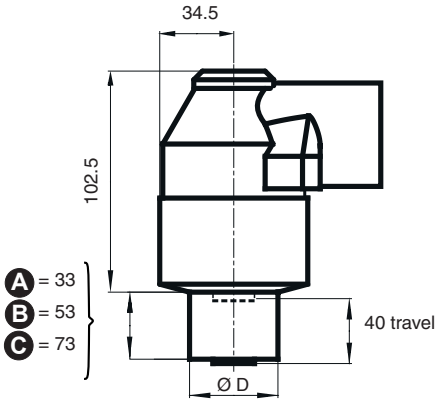

Screw holder – Two flats for LTV38 R42-HAD/LTV38 R50-HAD

Dimension X x Y mm	Suitable socket size mm	Ordering No. A	Ordering No. B	Ordering No. C
6.6 x 5	10-21	4220 1770 19	–	–
7 x 5	10-21	–	4220 1770 17	–
5.1 x 8.2	10-21	4220 1770 01	–	4220 1770 16
8 x 6	10-21	4220 1770 02	–	–

Two flats

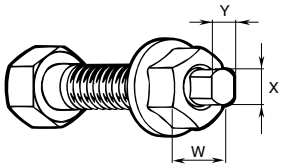

Screw holder – Two flats for LTV38 R40 LT/R85 HAD and LTV48 HAD

Dimension X x Y mm	Suitable socket size mm	Ordering No. A	Ordering No. B	Ordering No. C
8 x 6.3	15-24	4210 2694 17	4210 2694 18	4210 2694 19
8 x 6	15-24	4210 2694 05	4210 2694 10	4210 2694 15
9.55 x 7.6	18-24	4210 2694 01	4210 2694 06	4210 2694 11
11.20 x 8.9	19-24	4210 2694 02	4210 2694 07	4210 2694 12
13 x 9.8	19-24	4210 2694 03	4210 2694 08	4210 2694 13
13.20 x 10.5	19-24	4210 2694 04	4210 2694 09	4210 2694 14

Screw holder – Male hexagon for LTV38 R40 LT/R85 HAD and LTV48 HAD

Male hexagon

Dimension N mm	Suitable socket size mm	Ordering No. A	Ordering No. B	Ordering No. C
7	14-24	4210 2825 41	4210 2825 42	4210 2825 43
8	14-24	4210 2825 01	4210 2825 05	4210 2825 09
9	15-24	4210 2825 02	4210 2825 06	4210 2825 10
10	18-24	4210 2825 03	4210 2825 07	4210 2825 11
11	19-24	4210 2825 04	4210 2825 08	4210 2825 12
12	19-24	4210 2825 13	4210 2825 14	4210 2825 15

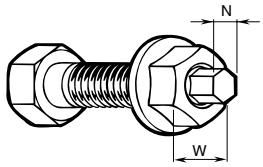

Bit holder – Female hexagon for LTV38 R42-HAD/LTV38 R50-HAD

Bit holder 1/4" A	Bit holder 1/4" B	Bit holder 1/4" C	Width N, mm	Bits
4220 1959 01	4220 1959 04	4220 1959 03	10-21	1/4"

Female hexagon

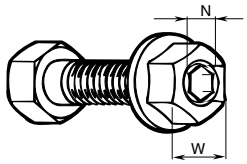

Bit holder – Female hexagon for LTV38 R40 LT/R85 HAD and LTV48 HAD

Bit holder 5/16" A	Bit holder 5/16" B	Bit holder 5/16" C	5/16" Bits Width N, mm	5/16" Bits Ordering No.
4210 2991 91	4210 2991 92	4210 2991 93	5	4023 1215 00
			6	4023 1216 00
			7	4023 1219 00
			8	4023 1217 00
			10	4023 1218 00

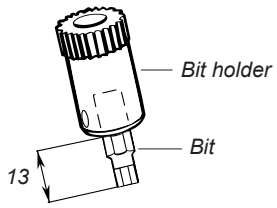

Bit holder – Female hexagon for LTV58 R350-HAD

Bit holder	Socket size mm	Ordering No. A	Ordering No. B	Ordering No. C
7	14-24	4210 2825 41	4210 2825 42	4210 2825 43
5/16"	18-20	4220 1777 88	4220 1777 89	4220 1777 90
5/16"	21-36	4220 1777 82	4220 1777 85	4220 1777 87

NOTE: 8 mm bit is included in the bit holders.

ANGLE NUTRUNNERS
Accessories

Model	Exhaust hose	Suspension yoke Fixed	Suspension yoke Swivelling	Protective cover (see picture below)	Reaction bar kit	Signal connection kit (-RE)
LTV08				4210 4015 00[a]		4210 4022 90
LTV18 R07		4210 1631 81		4210 4014 00[a]		4210 4023 90
LTV18 R15		4210 1631 81		4210 4013 00[a]		4210 4023 90
LTV28 R07	4210 2053 00	4210 1631 82	4210 3931 80	4210 3990 00[a]		4210 4019 90
LTV28, all models except R07	4210 2053 00	4210 1631 82	4210 3931 80	4210 3990 00[a]		4210 4018 90
LTV29/39	4210 2053 00	4210 1631 82	4210 4408 80			4210 4017 90
LTV29/39 R12/R16				4220 2744 05[b]		
LTV29/39 R24/R30				4220 2744 03[b]		
LTV38 R42/R50/R57/N31/N45/N55/N68, LTC38, LTV38 FS	4210 2053 00	4210 1631 82	4210 3931 81	4210 3992 90[a] (not LTC)		4210 4017 90
LTV38 R70/N85	4210 2053 00	4210 1631 82	4210 3931 81	4210 4003 90[a]		4210 4017 90
LTV38 R85/N100, LTV38 HAD	4210 2053 00	4210 1631 82	4210 3931 81	4210 4004 90[a]	4210 4020 80	4210 4017 90
LTV39 R48-10/R50-10				4220 2744 02[b]		
LTV39 R48-13/R50-13/R70				4220 2744 04[b]		
LTV48 R65	4210 4011 00	4210 4061 80	4210 4021 80	4210 4058 90[a]	4210 4020 80	4210 4057 90
LTV48 R120/R150/R200, LTC48, LTV48 FS, LTV48 HAD	4210 4011 00	4210 4061 80	4210 4021 80	4210 4059 90[a]	4210 4020 80	4210 4057 90
LTV58 N/R 180/200	4210 4011 00		4210 3088 80	4210 4059 90[a]	4220 1128 80	
LTV58 R350	4210 4011 00		4210 3088 80		4220 1201 80	
LTV58 R575	4210 4011 00		4210 3088 80		4220 1746 80	

Extensions for LTV

Suitable for tool	Length of extension –"L" mm	in	Ordering No.
LTV28	75	3	4210 3491 93
LTV28	150	6	4210 3491 95
LTV38 (not R70/R85)	75	3	4210 4301 80
LTV38 (not R70/R85)	150	6	4210 4302 80
LTV38R70/R85/LTV48	75	3	4210 4303 80
LTV38R70/R85/LTV48	150	6	4210 4304 80
LTV39R48/56/70-13	75	3	4210 4472 80
LTV39R48/56/70-13	150	6	4210 4473 80
LTV39R85	75	3	4210 4474 80
LTV39R85	150	6	4210 4475 80

DIMENSIONS

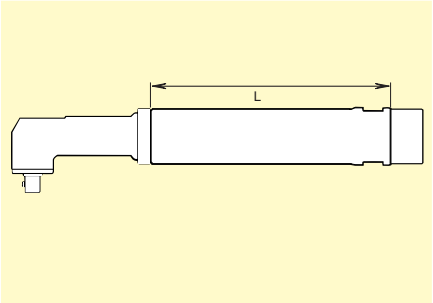

Protective cover (a)

Protective cover (b)

Reaction bar kit

Signal connection kit (RE)

SELECTED SERVICE KITS

The spare parts included in the service kits cover a normal overhaul of your tool. Always have them available for a fast and economical repair.

Main parts included:

- Vane kit
- Motor bearings
- Gaskets
- O-rings
- Circlips
- Pins etc.

Model	Service kit
LTV08 R	4081 0084 90
LTV18 R	4081 0085 90
LTV28 R	4081 0102 90
LTV28 N	4081 0107 90
LTV29	4081 0299 90
LTV38 N	4081 0108 90
LTV38 R	4081 0103 90
LTV39	4081 0298 90

Including the most common wear parts. For complete information, see spare parts list.

STRAIGHT NUTRUNNERS

Hand-held and fixture mounted

The Atlas Copco LTD straight nutrunners are used in hand-held applications and as components in systems for assembly stations, e.g. for:

- **Articulating arms** – Where a fixed support on the work piece for a reaction bar is not available a telescopic or articulated arm mounted LTD nutrunner might be the ideal solution.
- **Second fastener** – By combining two LTD straight nutrunners in a twin spindle unit the screws can be tightened simultaneously.
- **Sequence tightening** – The LTD system offers a flexible, low-cost solution to many advanced tightening requirements.
- **Automatic systems** – The LTD straight nutrunner is the ideal basic tightening unit in automatic and remotely controlled assembly systems.
- **Torque accuracy** – With fixtured tools the operator influence is minimized.

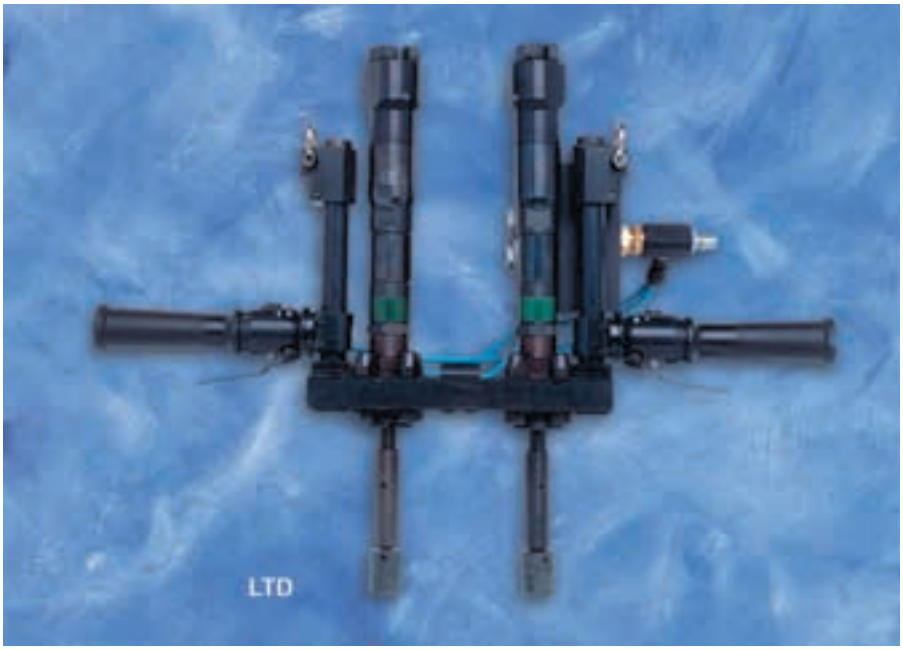

The LTD system

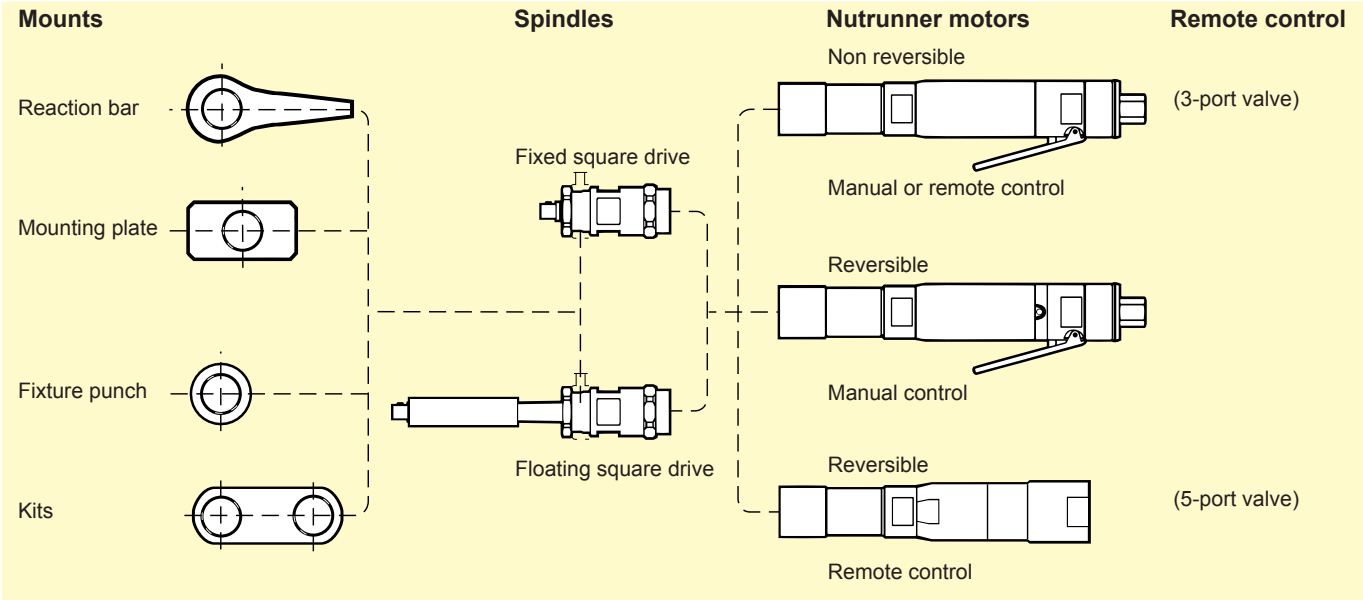

- **Reaction bar blanks** – For single spindle hand-held applications.
- **Mounting plates** – The LTD/LMD straight nutrunners have a splined reaction bar connection which can also be used for fixed assembly of the nutrunner. A number of standard mounting plates are available to order.
- **Floating square drive** – For two or more spindles the units must usually have floating spindles to compensate for run-down variations. Models with floating square drive or telescopic front parts are available.
- **Fixture punches** – For mounting of the nutrunner to locally made base plates a punch for the splines connection is available as optional equipment.
- **TwinSpin Kit** – A kit for building your own twin spindle assembly unit is available as extra equipment. Atlas Copco offers three sizes of twin spindle multiples, intended for 28, 38 and 48/51 sizes. The CC-distance in the TwinSpin is changeable and the largest size has a maximum CC-distance of 364 mm. The smallest size has a minimum CC-distance of 53 mm. The complete set has two throttle handles, one for forward and one for reverse, (if the system is non reversible there is only one throttle handle).
- **Remote control** – Remote control valves are available as optional equipment.
- **Air signal outlets** – All LTD models are equipped with air signal outlets for completed operation.
- **Electronic control** – Integrated torque and angle transducers and electronic instruments offer a wide selection of options for advanced tightening monitoring and control. Tools with angle encoders and torque transducers on request.

STRAIGHT NUTRUNNERS

Shut-off type

Bolt capacity M5 – M24

The LTD28, 38 and 48 straight nutrunners are based on the power package and clutch from the LTV angle nutrunners.

The LTD/LMD51 nutrunners are based on the unique LTP/LMP51range of twin motor pistol grip nutrunners with fast run-down and automatic torque-up at low speed, offering high productivity and unmatched torque accuracy as well as joint independence.

- **Remote control back head** – A remote valve is connected to the back head of the LTD –RR tools allowing a better multiple.
- **Accessibility** – Slim design allows the building of smooth, simple multiples or pare splndle designs. The lack of the clutch makes these tools shorter.
- **Flexibility** – The range of LTD tools provides you with the options for your requirements.
- **Reversibility** – Reversible LTD tools are available.

Model	Bolt size mm	Square drive in	Torque range soft joint Nm	Torque range soft joint ft lb	Free speed r/min	Weight kg	Weight lb	Length mm	CS distance mm	Air consumption at free speed l/s	Air consumption at free speed cfm	Rec. hose size mm	Air inlet thread in	Sound level dB(A)	Ordering No.
Non reversible, lever start															
LTD28 N9-RE	M5-6	3/8	5 - 9	4 - 6	1400	1.1	2.4	339	20	9	19	10	1/4	76	8431 0534 05
LTD28 N18-RE	M6	3/8	8 - 18	6 - 13	780	1.2	2.6	358	20	9	19	10	1/4	76	8431 0534 08
LTD28 N21-RE	M6	3/8	10 - 21	7 - 15	570	1.2	2.6	358	20	9	19	10	1/4	76	8431 0534 13
LTD28 N22-RE	M6	3/8	10 - 22	7 - 16	140	1.2	2.6	358	20	9	19	10	1/4	76	8431 0534 18
Reversible, lever start															
LTD28 R8-RE	M5-6	3/8	3 - 8	2 - 6	1100	1.2	2.6	363	20	8	17	10	1/4	76	8431 0534 61
LTD28 R16-RE	M6	3/8	7 - 16	6 - 12	610	1.3	2.9	383	20	8	17	10	1/4	76	8431 0534 65
LTD28 R20-RE	M6-8	3/8	10 - 20	7 - 15	520	1.3	2.9	383	20	8	17	10	1/4	76	8431 0534 51
LTD28 R22-RE	M6-8	3/8	10 - 22	7 - 16	125	1.3	2.9	383	20	8	17	10	1/4	76	8431 0534 54
Reversible, remote control back head															
LTD13 R05-RR	M3-5	1/4[c]	1.5 - 5	1.1 -3.7	850	0.7	1.6	197	16	7	15	8	1/8	76	8431 0533 05
LTD13 R08-RR	M3-5	1/4[c]	1.5 - 8	1.1 - 6	500	0.8	1.7	197	16	7	15	8	1/8	76	8431 0533 06
LTD25 R13-RR	M2.5-6	1/4[c]	8 - 13	6 10	300	1.1	2.4	224	19	7	15	10	1/4	76	8431 0533 11
LTD28 R8-RR	M5-6	3/8	3 - 8	2 - 6	1100	1.2	2.6	294	20	8	17	10/13	[a]	76[b]	8431 0703 80
LTD28 R16-RR	M6	3/8	7 - 16	6 - 12	610	1.3	2.9	313	20	8	17	10/13	[a]	76[b]	8431 0703 82
LTD28 R20-RR	M6-8	3/8	10 - 20	7 - 15	520	1.3	2.9	313	20	8	17	10/13	[a]	76[b]	8431 0703 83
Non reversible, lever start, telescopic front part, travel 25 mm															
LTD28 N9F-RE	M5-6	3/8	5 - 9	4 - 6	1400	1.5	3.3	447	20	9	19	10	1/4	76	8431 0534 21
LTD28 N18F-RE	M6	3/8	8 - 18	6 - 13	780	1.6	3.5	466	20	9	19	10	1/4	76	8431 0534 27
LTD28 N21F-RE	M6	3/8	10 - 21	7 - 15	570	1.6	3.5	466	20	9	19	10	1/4	76	8431 0534 39
LTD28 N22F-RE	M6	3/8	10 - 22	7 - 16	140	1.6	3.5	466	20	9	19	10	1/4	76	8431 0534 43

[a] Air inlet thread = 2 x 1/4" + 1 x 3/8".

[b] With exhaust manifold.

[c] 1/4" quick change chuck.

Continued...

ACCESSORIES INCLUDED

Hose fitting

Clutch adjustment key

STRAIGHT NUTRUNNERS

Shut-off type

Model	Bolt size mm	Square drive in	Torque range soft joint Nm	Torque range soft joint ft lb	Free speed r/min	Weight kg	Weight lb	Length mm	CS distance mm	Air consumption at free speed l/s	Air consumption at free speed cfm	Rec. hose size mm	Air inlet thread in	Sound level dB(A)	Ordering No.
Reversible, lever start, telescopic front part, travel 25 mm															
LTD28 R8F-RE	M5-6	3/8	3- 8	2- 6	1100	1.6	3.5	471	20	8	17	10	1/4	76	8431 0534 78
LTD28 R16F-RE	M6	3/8	7- 16	6- 12	620	1.7	3.7	491	20	8	17	10	1/4	76	8431 0534 85
LTD28 R20F-RE	M6-8	3/8	10- 20	7- 15	570	1.7	3.7	491	20	8	17	10	1/4	76	8431 0534 37
LTD28 R22F-RE	M6-8	3/8	10- 22	7- 16	125	1.7	3.7	491	20	8	17	10	1/4	76	8431 0534 89
Reversible, remote control back head, telescopic front part, travel 25 mm															
LTD28 R8F-RR	M5-6	3/8	3- 8	2- 6	1100	1.6	3.5	401	20	8	17	10/13	[a]	76[b]	8431 0703 84
LTD28 R16F-RR	M6	3/8	7- 16	6- 12	620	1.7	3.7	421	20	8	17	10/13	[a]	76[b]	8431 0703 86
LTD28 R20F-RR	M6-8	3/8	10- 20	7- 15	570	1.7	3.7	421	20	8	17	10/13	[a]	76[b]	8431 0703 88
Non-reversible, lever start															
LTD38 N30-RE	M8	1/2	14- 30	10- 21	820	2.2	4.8	414	20	16	34	10	1/4	80	8431 0535 04
LTD38 N38-RE	M8	1/2	20- 38	15- 27	680	2.2	4.8	414	20	16	34	10	1/4	80	8431 0535 12
LTD38 N44-RE	M8-10	1/2	18- 44	13- 32	580	2.2	4.8	414	20	20	42	10	1/4	80	8431 0535 17
LTD38 N55-RE	M10	1/2	27- 55	20- 40	470	2.2	4.8	487	20	20	42	10	1/4	80	8431 0535 20
Reversible, lever start															
LTD38 R27-RE	M8	1/2	13- 27	10- 20	670	2.1	4.6	441	20	16	34	10	1/4	80	8431 0534 53
LTD38 R32-RE	M8	1/2	18- 32	13- 24	560	2.1	4.6	441	20	16	34	10	1/4	80	8431 0534 52
LTD38 R38-RE	M8-10	1/2	19- 38	14- 28	480	2.1	4.6	441	20	16	34	10	1/4	80	8431 0535 78
LTD38 R47-RE	M8-10	1/2	22- 47	16- 35	380	2.3	5.1	513	20	20	42	10	1/4	80	8431 0535 83
Reversible, remote control back head															
LTD38 R27-RR	M8	1/2	13- 27	10- 20	670	2.1	4.6	377	21	16	34	10/16	[a]	80[b]	8431 0704 22
LTD38 R32-RR	M8	1/2	18- 32	13- 24	560	2.1	4.6	377	21	16	34	10/16	[a]	80[b]	8431 0704 24
LTD38 R38-RR	M8-10	1/2	19- 38	14- 28	480	2.1	4.6	377	21	16	34	10/16	[a]	80[b]	8431 0704 26
LTD38 R47-RR	M8-10	1/2	22- 47	16- 35	380	2.3	5.1	448	21	16	34	10/16	[a]	80[b]	8431 0704 28
Non-reversible, lever start, telescopic front part, travel 25 mm															
LTD38 N30F-RE	M8	1/2	14- 30	10- 21	820	2.3	5.0	521	20	20	42	10	1/4	80	8431 0535 38
LTD38 N38F-RE	M8	1/2	20- 38	15- 27	680	2.3	5.0	521	20	20	42	10	1/4	80	8431 0535 46
LTD38 N44F-RE	M8-10	1/2	18- 44	13- 32	580	2.3	5.0	521	20	20	42	10	1/4	80	8431 0535 31
LTD38 N55F-RE	M10	1/2	27- 55	20- 40	470	2.5	5.5	599	23	20	42	10	1/4	80	8431 0535 53
Reversible, lever start, telescopic front part, travel 25 mm															
LTD38 R27F-RE	M8	1/2	13- 27	10- 20	670	2.5	5.5	546	20	16	34	10	1/4	80	8431 0535 65
LTD38 R32F-RE	M8	1/2	18- 32	13- 24	560	2.5	5.5	546	20	16	34	10	1/4	80	8431 0535 91
LTD38 R38F-RE	M8-10	1/2	19- 38	14- 28	480	2.5	5.5	546	20	16	34	10	1/4	80	8431 0535 95
LTD38 R47F-RE	M8-10	1/2	22- 47	16- 35	380	2.7	5.9	625	23	16	34	10	1/4	80	8431 0535 99
Reversible, remote control back head, telescopic front part, travel 25 mm															
LTD38 R27F-RR	M8	1/2	13- 27	10- 20	670	2.5	5.5	482	21	16	34	10/16	[a]	80[b]	8431 0704 30
LTD38 R32F-RR	M8	1/2	18- 32	13- 24	560	2.5	5.5	482	21	16	34	10/16	[a]	80[b]	8431 0704 32
LTD38 R38F-RR	M8-10	1/2	19- 38	14- 28	480	2.5	5.5	482	21	16	34	10/16	[a]	80[b]	8431 0704 34
LTD38 R47F-RR	M8-10	1/2	22- 47	16- 35	380	2.7	5.9	566	23	16	34	10/16	[a]	80[b]	8431 0704 36
Reversible, lever start															
LTD48 R65-RE[e]	M10	1/2	27- 65	20- 48	400	3.1	6.8	582	30	28	59	12.5	1/2	82	8431 0637 07
LTD48 R81-RE[e]	M12	1/2	32- 81	24- 60	320	3.1	6.8	582	30	28	59	12.5	1/2	82	8431 0637 12
Reversible, remote control back head															
LTD48 R65-RR	M10	1/2	27- 65	20- 48	400	3.5	7.7	410	28	30	63	12.5/16	[d]	–	8431 0704 46
LTD48 R81-RR	M12	1/2	32- 81	24- 60	330	3.5	7.7	410	28	30	63	12.5/16	[d]	–	8431 0704 48
Reversible, lever start, telescopic front part, travel 25 mm															
LTD48 R65F-RE[e]	M10	1/2	27- 65	20- 48	400	3.5	7.7	700	30	28	59	12.5	1/2	82	8431 0637 17
LTD48 R81F-RE[e]	M12	1/2	32- 81	24- 60	320	3.5	7.7	700	30	28	59	12.5	1/2	82	8431 0637 23

[a] Air inlet thread = 2 x 1/4" + 1 x 3/8".
[b] With exhaust manifold.
[c] 1/4" quick change chuck.
[d] Air inlet thread = 2 x 1/2" + 1 x 3/4".
[e] Optional RE kit LTD48 RE Ordering No. 4210 4057 90.

Continued...

ACCESSORIES INCLUDED

Hose fitting

Clutch adjustment key

STRAIGHT NUTRUNNERS

Non shut-off and shut-off types

Model	Bolt size mm	Square drive in	Torque range soft joint Nm	Torque range soft joint ft lb	Free speed r/min	Weight kg	Weight lb	Length mm	CS distance mm	Air consumption at free speed l/s	Air consumption at free speed cfm	Rec. hose size mm	Air inlet thread in	Sound level dB(A)	Ordering No.
Reversible, remote control back head															
LTD48 R65F-RR	M10	1/2	27 - 65	20 - 48	400	3.7	8.2	522	28	30	63	12.5/16	[d]	-	8431 0704 50
LTD48 R81F-RR	M12	1/2	32 - 81	24 - 60	330	3.7	8.2	522	28	30	63	12.5/16	[d]	-	8431 0704 52
Torque control models with fixed square drive															
LTD51 012-13-RE	M12	1/2	45 - 100	35 - 75	1000	2.6	5.7	223	29	19	40	10	3/8	79[b]	8431 0525 07
LTD51 008-13-RE	M14	1/2	70 - 175	50 - 130	600	2.6	5.7	223	29	19	40	10	3/8	79[b]	8431 0525 15
LTD51 006-19-RE	M16	3/4	85 - 225	60 - 165	450	2.6	5.7	223	29	19	40	10	3/8	79[b]	8431 0525 23
LTD51 006-16-RE	M16	5/8	85 - 225	60 - 165	450	2.6	5.7	223	29	19	40	10	3/8	79[b]	8431 0525 22
LTD51 004-20-RE	M18	3/4	145 - 320	105 - 235	300	3.3	7.3	260	31	19	40	10	3/8	79[b]	8431 0525 31
LTD51 002-20-RE	M20	3/4	220 - 460	165 - 335	200	3.3	7.3	260	31	19	40	10	3/8	79[b]	8431 0525 49
LTD51 001-25-RE	M24	1	300 - 900	220 - 660	52	3.6	7.9	282	32	19	40	10	3/8	79[b]	8431 0525 21
Non shut-off															
Stall type models with fixed square drive															
LMD51 012-13-RE	M12	1/2	60 - 110	45 - 80	1100	2.6	5.7	223	29	19	40	10	3/8	79[b]	8431 0526 05
LMD51 008-13-RE	M14	1/2	95 - 190	70 - 140	680	2.6	5.7	223	29	19	40	10	3/8	79[b]	8431 0526 13
LMD51 006-19-RE	M16	3/4	182 - 250	95 - 185	520	2.6	5.7	223	29	19	40	10	3/8	79[b]	8431 0526 69
LMD51 006-16-RE	M16	5/8	182 - 250	95 - 185	520	2.6	5.7	223	29	19	40	10	3/8	79[b]	8431 0526 22
LMD51 004-20-RE	M18	3/4	195 - 380	140 - 275	305	3.3	7.3	260	31	19	40	10	3/8	79[b]	8431 0526 39
LMD51 002-20-RE	M20	3/4	260 - 550	190 - 400	210	3.3	7.3	260	31	19	40	10	3/8	79[b]	8431 0526 47
LMD51 001-25-RE	M24	1	470 - 950	345 - 695	125	3.7	8.2	282	32	19	40	10	3/8	79[b]	8431 0526 37

[a] Air inlet thread = 2 x 1/4" + 1 x 3/8".
[b] With exhaust manifold.
[c] 1/4" quick change chuck.
[d] Air inlet thread = 2 x 1/2" + 1 x 3/4".
[e] Optional RE kit LTD48 RE Ordering No. 4210 4057 90.

LTD51/LMD51: Change over torque is around 7% of maximum torque on a given air pressure.

TELESCOPIC FRONT PART LMD/LTD51

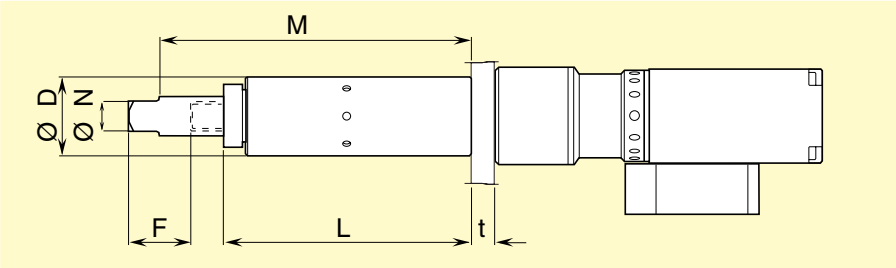

Model	Dimensions N in	D mm	F mm	L mm	M mm	t mm	Ordering No.
LMD/LTD51 008/012	1/2	34	25	101	127	12	4210 3864 80
LMD/LTD51 006-16-RE	3/4	41	25	117	148	12	4210 3789 80
LMD/LTD51 002/004	3/4	50	40	160	201	15	4210 3781 81
LMD/LTD51 001	1	67	50	226	278	15	4210 3788 80

ACCESSORIES INCLUDED

Hose fitting

Clutch adjustment key

STRAIGHT NUTRUNNERS
Accessories

Reaction bar

	Dimensions mm	LTD28	LTD38	LTD38 N55/R47 LTD46/48 LMD/LTD51	LMD/LTD51 3/4" square models	LMD/LTD51 1" square models
	L					
Bar blank (steel)	250	4210 1798 00	4210 2134 00			
	200			4210 2219 02		
	500				4210 2726 80	4210 2183 80
Bar blank (aluminium)	400			4210 2219 01		

Mounting plate

	Dimensions mm	LTD28	LTD38	LTD38 N55/R47 LTD46/48 LMD/LTD51 006/008/012	LMD/LTD51 002/004	LMD/LTD51 001
Side mount 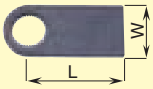	**L x W**					
	90 x 40	4210 1798 01	4210 2134 01			
	120 x 70				4210 2809 80	4210 2808 80
Centre mount 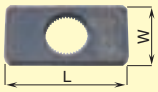	**L x W**					
	70 x 40	4210 1798 02	4210 2134 02			
	100 x 50			4210 2219 03		
	125 x 65				4210 2183 01	4210 2726 01
Flange mount	D 55			4210 2219 10		

TwinSpin kit. Includes; 2 x support handle, 2 x mounting plate (with corresponding splines), 2 x handle attachment, 1 x suspension wire, 1 x reaction arm, 2 x beam, 1 x assembly tool, 1 x mounting plate for reaction bar, 2 x post, 2 x bracket.

TwinSpin kit	Max CC-distance[a]	Min CC-distance[a]	Ordering No.
LTD28 RE/RR	383	53	4210 4159 80
LTD38 N30/N38/N44/R27/R32/R38-RE/RR	376	60	4210 4160 80
LTD38 N55/R47-RE/RR	364	72	4210 4161 80
LTD48 RE/RR	364	72	4210 4161 80
LMD/LTD51 006, 008, 012	364	72	4210 4161 82
LMD/LTD51 002/004	362	87	4210 4161 81

[a] CC-distance = distance between center of spindles.

Valve kits. Includes; main valve, throttle handle valve/valves, bracket, hose nipples and hose clamps.

Intended for tool type	Valve type	Ordering No.
LTD28/38 RE	3-gate for non reversible	4210 4162 80
LTD28 RR	5-gate for reversible	4210 4163 80
LTD48 RE	3-gate for non reversible	4210 4166 80
LTD38/48 RR	5-gate for reversible	4210 4167 80
LMD/LTD51 006, 008, 012	3-gate for non reversible	4210 4166 80

Exhaust manifolds. Includes; Block, silencer with gasket and nipples.

Intended for tool type	Ordering No.
LTD28 RR	4210 4168 80
LTD38 RR	4210 4168 81
LTD48 RR	4210 4168 81

PISTOL GRIP NUTRUNNERS

The pistol grip nutrunners from Atlas Copco are a unique combination of torque, speed and weight.

With the Atlas Copco LMP/LTP51 and LTP61 range you get the highest possible rate of torque and speed in relation to the weight of the tool.

- **Extremely fast** – Due to the twin motor concept of LTP/LMP51 and LTP61.
- **Good torque accuracy** – Even on soft joints.
- **No reaction forces** due to the reaction bar.
- **Low sound level** – Exhaust through handle.
- **Single handed operation** – The low weight and the perfectly balanced pistol grip design make the single hand operated LMP24/51 and LTP51/61 nutrunners safer and more comfortable to use.
- **Reversible for maximum flexibility** – Being able to loosen fasteners without changing tools improves productivity and is a major operator benefit in terms of time and effort.

Electronic monitoring and control

In order to obtain the highest possible production quality all tools can be equipped for electronic monitoring of torque.

- **Torque transducer** – The LMP24 and LMP/LTP51 and LTP61 can be used together with the accurate and easy-to-use PRT add on transducers, for torque monitoring.

PISTOL GRIP NUTRUNNERS

Stall type

LMP24/LMP51 H.

Bolt capacity M6 – M42

Patented standard twin motors give faster production and an increased accuracy with a minimum of air consumption.

- Very high torque accuracy.
- The swivelling function facilitates tool positioning.
- Fast rundown motor for time saving.
- Extremely good weight to torque output ratio compared to single motor pistol grip nutrunners.
- Available as both reversible and non-reversible models.

LMP51 PH. Bolt capacity M12 – M27
For prevailing applications

The LMP51 PH and LTP51 PH are specially designed to handle prevailing applications, such as locking nuts. A special gear gives a higher change over torque. This allows the fast rundown motor to handle most of the rundown before the slower but stronger tightening motor is used.

Model	Bolt size mm	Square drive in	Torque soft joint at 6.3 bar / at 3 bar Nm	ft lb	Nm	ft lb	Free speed r/min	Weight[a] kg	lb	Length mm	CS distance mm	Air consumption at free speed l/s	cfm	Rec. hose size mm	Air inlet thread in	Spline type	Ordering No.
Non-reversible																	
LMP24 H011-10	M6	3/8	13	10	6	4	1550	1.0	2.2	210	18	11	23	10	1/4	1	8431 0245 56
LMP24 H005-10	M8	3/8	30	22	14	10	500	1.0	2.2	210	18	11	23	10	1/4	1	8431 0245 49*
LMP24 H003-13	M8	1/2	40	30	14	10	330	1.2	2.6	210	18	11	23	10	1/4	1	8431 0245 64
LMP24 H002-13	M10	1/2	58	43	27	20	240	1.3	2.9	230	21	11	23	10	1/4	2	8431 0245 31*
LMP51 H012-13	M12	1/2	110	80	60	45	1100	2.6	5.7	223	29	19	40	10	3/8	3	8431 0510 05
LMP51 H008-13	M14	1/2	190	140	95	70	680	2.6	5.7	223	29	19	40	10	3/8	3	8431 0510 13*
LMP51 H006-19	M16	3/4	250	185	130	96	520	2.6	5.7	223	29	19	40	10	3/8	3	8431 0513 69
LMP51 H004-20	M18	3/4	380	275	195	140	305	3.3	7.3	260	31	19	40	10	3/8	4	8431 0510 39*
LMP51 H002-20	M20	3/4	550	400	260	190	210	3.3	7.3	260	31	19	40	10	3/8	4	8431 0510 47*
LMP51 H001-25	M24	1	950	695	470	345	125	3.7	8.2	282	32	19	40	10	3/8	5	8431 0512 37*
LMP51 H0007-25	M30	1	1500	1105	750	550	75	6.5	14.3	323	42	19	40	10	3/8	9	8431 0510 57
LMP51 H0005-38	M30	1 1/2	2100	1512	1100	792	52	13.8	30.4	380	68	19	40	10	3/8	8	8431 0510 59
LMP51 H0004-38	M36	1 1/2	3000	2160	1600	1152	36	13.8	30.4	380	68	19	40	10	3/8	8	8431 0510 64
LMP51 H0003-38	M42	1 1/2	4100	2952	2100	1512	26	13.8	30.4	380	68	19	40	10	3/8	8	8431 0510 68
Reversible																	
LMP24 HR011-10	M6	3/8	10	7	5	4	860	1.0	2.2	210	18	11	23	10	1/4	1	8431 0245 85
LMP24 HR005-10	M8	3/8	22	16	10	7	380	1.0	2.2	210	18	11	23	10	1/4	1	8431 0245 77
LMP24 HR003-13	M8	1/2	30	22	14	10	250	1.2	2.6	210	18	11	23	10	1/4	1	8431 0245 91
LMP24 HR002-13	M10	1/2	40	33	20	15	180	1.3	2.9	230	21	11	23	10	1/4	2	8431 0245 70
LMP51 HR008-13	M14	1/2	190	140	95	70	680	2.6	6.6	238	30	19	40	10	3/8	3	8431 0528 13
LMP51 HR004-20	M18	3/4	380	275	195	140	305	3.9	8.6	275	34	19	40	10	3/8	4	8431 0528 39
LMP51 HR002-20	M20	3/4	550	400	260	190	210	3.9	8.6	275	34	19	40	10	3/8	4	8431 0528 47
LMP51 HR001-25	M24	1	950	695	470	345	125	4.3	9.5	305	34	19	40	10	3/8	5	8431 0528 37
LMP51 HR0007-25	M30	1	1500	1105	750	550	75	6.6	14.6	345	42	19	40	10	3/8	9	8431 0528 57
LMP51 HR0005-38	M30	1 1/2	2100	1512	1100	792	52	13.8	30.0	380	68	19	40	10	3/8	8	8431 0528 62
LMP51 HR0004-38	M36	1 1/2	3000	2160	1600	1152	36	13.8	30.0	380	68	19	40	10	3/8	8	8431 0528 65
LMP51 HR0003-38	M42	1 1/2	4100	2952	2100	1512	26	13.8	30.0	380	68	19	40	10	3/8	8	8431 0528 72
For prevaling applications. Non-reversible																	
LMP51 PH005-13	M12	1/2	125	90	65	45	470	2.6	5.7	223	29	19	40	10	3/8	3	8431 0510 96
LMP51 PH004-13	M12	1/2	200	145	105	75	300	2.6	5.7	223	29	19	40	10	3/8	3	8431 0510 88
LMP51 PH003-19	M16	3/4	280	205	140	100	220	2.6	5.7	223	29	19	40	10	3/8	3	8431 0513 85
LMP51 PH002-20	M18	3/4	420	305	210	155	135	3.3	7.3	260	31	19	40	10	3/8	4	8431 0510 62
LMP51 PH001-20	M20	3/4	590	430	290	215	90	3.3	7.3	260	31	19	40	10	3/8	4	8431 0510 54
LMP51 PH0005-25	M27	1	950	695	470	345	55	3.7	8.2	282	32	19	40	10	3/8	5	8431 0512 45
For prevaling applications. Reversible																	
LMP51 PHR0005-25	M27	1	950	695	470	345	55	4.3	9.5	305	34	19	40	10	3/8	5	8431 0528 45

[a] Without reaction bar.

Sound level: LMP24/51 79 dB(A)

LMP51 H: Change over torque is around 7% of maximum torque on a given air pressure.

LMP51 PH: Change over torque is around 15% of maximum torque on a given air pressure.

* Basic tools of the range, cover most needs.

ACCESSORIES INCLUDED

LMP24: Suspension yoke, reaction bar
LMP51: Swivel type reaction bar

OPTIONAL ACCESSORIES

Page 67

SELECTED SERVICE KITS

Page 67

PISTOL GRIP NUTRUNNERS

Torque control type

LTP51 H. Bolt capacity M12 – M42
Torque control type

Patented standard twin motors give faster production and an increased accuracy with a minimum of air consumption.

- The LTP51 has all the features of the LMP51 plus an easy to use shut-off valve.
- Automatic shut-off at preset level.
- Gives fast and reliable tightening.
- Very high torque accuracy.
- The swivelling function facilitates tool positioning.
- Fast rundown motor for time saving.
- Extremely good weight to torque output ratio compared to single motor pistol grip nutrunners.
- Available as both reversible and non-reversible models.
- Multi Torque device available making it posssible to use the same tool at four different settings.

LTP51 PH
For prevailing applications

The LMP51 PH and LTP51 PH are specially designed to handle prevailing applications, such as locking nuts. A special gear gives a higher change over torque. This allows the fast rundown motor to handle most of the rundown before the slower but stronger tightening motor is used.

Model	Bolt size mm	Square drive in	Torque range at 5 bar Nm	Torque range at 5 bar ft lb	Min torque at 3 bar Nm	Min torque at 3 bar ft lb	Max torque at 6.3 bar Nm	Max torque at 6.3 bar ft lb	Free speed r/min	Weight[a] kg	Weight[a] lb	Length mm	CS distance mm	Air consumption at free speed l/s	Air consumption at free speed cfm	Air inlet thread in	Spline type	Ordering No.
Non-reversible																		
LTP51 H012-13	M12	1/2	60 - 85	45 - 65	45	35	100	75	900	2.6	5.7	223	29	19	40	3/8	3	8431 0500 07*
LTP51 H008-13	M14	1/2	85 - 150	60 - 110	70	50	175	130	550	2.6	5.7	223	29	19	40	3/8	3	8431 0500 15*
LTP51 H006-19	M16	3/4	120 - 185	85 - 135	85	60	225	165	400	2.6	5.7	223	29	19	40	3/8	3	8431 0513 77*
LTP51 H004-20	M18	3/4	200 - 270	145 - 200	145	105	320	235	255	3.3	7.3	260	31	19	40	3/8	4	8431 0500 31*
LTP51 H002-20	M20	3/4	265 - 380	195 - 280	220	160	460	335	175	3.3	7.3	260	31	19	40	3/8	4	8431 0500 49*
LTP51 H0014-25	M22	1	380 - 530	280 - 390	280	207	680	503	135	4.3	9.5	305	34	19	40	3/8	5	8431 0500 75
LTP51 H001-25	M24	1	450 - 700	330 - 510	300	220	900	660	100	3.6	7.9	282	32	19	40	3/8	5	8431 0502 21*
LTP51 H0007-25	M30	1	740 -1100	545 - 810	700	516	1500	1106	55	6.5	14.3	323	42	19	40	3/8	9	8431 0500 53
LTP51 H0005-38	M30	1 1/2	1000 -1700	720 - 1512	800	576	2100	1440	52	13.8	30	380	68	19	40	3/8	8	8431 0500 58
LTP51 H0004-38	M36	1 1/2	1500 -3000	1080 - 2160	1200	864	3000	2160	36	13.8	30	380	68	19	40	3/8	8	8431 0500 60
LTP51 H0003-38	M42	1 1/2	2000 -3300	1440 - 2952	1600	1152	4100	2880	26	13.8	30	380	68	19	40	3/8	8	8431 0500 63
Reversible																		
LTP51 HR012-13	M12	1/2	60 - 85	45 - 65	45	35	100	75	900	2.6	5.7	235	30	19	40	3/8	3	8431 0527 07
LTP51 HR008-13	M14	1/2	85 - 150	60 - 110	70	50	175	130	550	3.0	6.6	238	30	19	40	3/8	3	8431 0527 15
LTP51 HR004-20	M18	3/4	200 - 270	145 - 200	145	105	320	235	255	3.9	8.6	275	34	19	40	3/8	4	8431 0527 31
LTP51 HR002-20	M20	3/4	265 - 380	195 - 280	220	160	460	235	175	3.9	8.6	275	34	19	40	3/8	4	8431 0527 49
LTP51 HR0014-25	M22	1	380 - 530	280 - 390	280	207	680	503	135	4.3	9.5	320	34	19	40	3/8	5	8431 0527 25
LTP51 HR001-25	M24	1	450 - 700	330 - 510	300	220	900	660	100	4.3	9.5	305	34	19	40	3/8	5	8431 0527 21
LTP51 HR0007-25	M30	1	740 -1100	545 - 810	700	516	1500	1106	55	6.6	14.6	345	42	19	40	3/8	9	8431 0527 53
LTP51 HR0005-38	M30	1 1/2	1000 -1500	720 - 1080	800	576	2000	1440	52	13.8	30.0	380	68	19	40	3/8	8	8431 0527 55
LTP51 HR0004-38	M36	1 1/2	1500 -2200	1080 - 1584	1200	864	3000	2160	36	13.8	30.0	380	68	19	40	3/8	8	8431 0527 58
LTP51 HR0003-38	M42	1 1/2	2000 -3000	1440 - 2160	1600	1152	4000	2880	26	13.8	30.0	380	68	19	40	3/8	8	8431 0527 60
For prevaling applications. Non-reversible																		
LTP51 PH005-13	M12	1/2	65 - 90	45 - 65	50	35	110	80	425	2.6	5.7	223	29	19	40	3/8	3	8431 0500 98
LTP51 PH004-13	M14	1/2	100 - 155	75 - 115	80	60	190	140	255	2.6	5.7	223	29	19	40	3/8	3	8431 0500 80
LTP51 PH003-19	M16	3/4	150 - 205	110 - 150	95	70	260	190	190	2.6	5.7	223	29	19	40	3/8	3	8431 0513 93
LTP51 PH002-20	M18	3/4	220 - 300	160 - 220	160	115	380	280	130	3.3	7.3	260	31	19	40	3/8	4	8431 0500 64
LTP51 PH001-20	M20	3/4	305 - 415	220 - 305	220	160	520	380	85	3.3	7.3	260	31	19	40	3/8	4	8431 0500 56
LTP51 PH0005-25	M27	1	595 - 805	435 - 590	450	330	950	695	50	3.7	8.2	282	32	19	40	3/8	5	8431 0502 39
For prevaling applications. Reversible																		
LTP51 PHR0005-25	M27	1	595 - 805	435 - 590	450	330	950	695	50	4.3	9.5	305	34	19	40	3/8	5	8431 0527 39

[a] Without reaction bar.
Recommended hose size: 13 mm
Sound level: 79 dB(A)

LTP51 H/HR: Change over torque is around 7% of maximum torque on a given air pressure.
LTP51 PH: Change over torque is around 15% of maximum torque on a given air pressure.

* Basic tools of the range, cover most needs.

ACCESSORIES INCLUDED
LTP51: Swivel type reaction bar

OPTIONAL ACCESSORIES
Page 67

SELECTED SERVICE KITS
Page 67

PISTOL GRIP NUTRUNNERS

Torque control type

LTP61 H/HR
Bolt capacity M12 – M42

The LTP61 features the same twin motor concept as the LTP51 range. The main difference is the speed – the rundown is twice as fast as the LTP51.

All other features, such as high torque accuracy and extremely high torque output to weight ratio, are the same.

In addition you get a reversible tool that has fixed positions for both forward and reverse.

Model	Bolt size mm	Square drive in	Torque range at 6.3 bar Nm	Torque range at 6.3 bar ft lb	Min torque at 3 bar Nm	Min torque at 3 bar ft lb	Free speed r/min	Weight[a] kg	Weight[a] lb	Length mm	CS distance mm	Air consumption at free speed l/s	Air consumption at free speed cfm	Air inlet thread in	Spline type	Ordering No.
Non reversible																
LTP61 H100-13	M12	1/2	55 - 100	40 - 75	45	35	1800	3.0	6.6	223	29	20	42	3/8	3	8431 0800 07
LTP61 H170-13	M14	1/2	95 - 170	70 - 125	70	50	1100	3.0	6.6	223	29	20	42	3/8	3	8431 0800 14
LTP61 H230-19	M16	3/4	125 - 230	90 - 170	85	60	820	3.0	6.6	223	29	20	42	3/8	3	8431 0800 21
LTP61 H350-20	M18	3/4	190 - 350	140 - 255	145	105	520	3.9	8.6	260	31	20	42	3/8	4	8431 0800 28
LTP61 H500-20	M20	3/4	275 - 500	200 - 370	220	160	360	3.9	8.6	260	31	20	42	3/8	4	8431 0800 35
LTP61 H700-25	M22	1	360 - 650	265 - 480	280	207	280	4.5	9.9	305	34	20	42	3/8	5	8431 0800 42
LTP61 H900-25	M24	1	480 - 870	350 - 640	300	220	210	4.5	9.9	282	32	20	42	3/8	5	8431 0800 49
LTP61 H1500-25	M30	1	850 - 1500	625 - 1100	700	516	115	6.8	14.5	323	42	20	42	3/8	9	8431 0800 56
LTP61 H1900-38	M30	1 1/2	1050 - 1900	770 - 1400	800	576	90	14.1	31.0	380	68	20	42	3/8	8	8431 0800 63
LTP61 H2800-38	M36	1 1/2	1550 - 2800	1140 - 2060	1200	864	65	14.1	31.0	380	68	20	42	3/8	8	8431 0800 70
LTP61 H3800-38	M42	1 1/2	2100 - 3800	1540 - 2790	1600	1152	50	14.1	31.0	380	68	20	42	3/8	8	8431 0800 77
Reversible																
LTP61 HR100-13	M12	1/2	55 - 100	40 - 75	45	35	1800	3.0	6.6	235	30	20	42	3/8	3	8431 0801 08
LTP61 HR170-13	M14	1/2	95 - 170	70 - 125	70	50	1100	3.0	6.6	238	30	20	42	3/8	3	8431 0801 15
LTP61 HR230-19	M16	3/4	125 - 230	90 - 170	85	60	820	3.0	6.6	275	34	20	42	3/8	3	8431 0801 22
LTP61 HR350-20	M18	3/4	190 - 350	140 - 255	145	105	520	3.9	8.6	275	34	20	42	3/8	4	8431 0801 29
LTP61 HR500-20	M20	3/4	275 - 500	200 - 370	220	160	360	3.9	8.6	275	34	20	42	3/8	4	8431 0801 36
LTP61 HR700-25	M22	1	360 - 650	265 - 480	280	207	280	4.5	9.9	305	34	20	42	3/8	5	8431 0801 43
LTP61 HR900-25	M24	1	480 - 870	350 - 640	300	220	210	4.5	9.9	305	34	20	42	3/8	5	8431 0801 50
LTP61 HR1500-25	M30	1	850 - 1500	625 - 1100	700	516	115	6.8	14.5	345	42	20	42	3/8	9	8431 0801 57
LTP61 HR1900-38	M30	1 1/2	1050 - 1900	770 - 1400	800	576	90	14.1	31.0	380	68	20	42	3/8	8	8431 0801 64
LTP61 HR2800-38	M36	1 1/2	1550 - 2800	1140 - 2060	1200	864	65	14.1	31.0	380	68	20	42	3/8	8	8431 0801 71
LTP61 HR3800-38	M42	1 1/2	2100 - 3800	1540 - 2790	1600	1152	50	14.1	31.0	380	68	20	42	3/8	8	8431 0801 78

[a] Without reaction bar.
Recommended hose size: 13 mm
Sound level: 79 dB(A)

LTP61 H/HR: Change over torque is around 7% of maximum torque on a given air pressure.

ACCESSORIES INCLUDED
LTP61: Swivel type reaction bar

OPTIONAL ACCESSORIES
Page 67

SELECTED SERVICE KITS
Page 67

PISTOL GRIP NUTRUNNERS

Torque control with integrated Multi Torque Selector

LTP51 Multi Torque
Bolt capacity M14 – M42

- The Multi Torque Selector makes it possible to preset up to four different shut off levels.
- The Rotary dial mounted on the tool allows the operator to select different torque levels without changing the tool.
- Ideal for situations where:
  - Several different assembly operations take place.
  - Multi-stage tightening operations are required.
  - Several different torque settings are needed.

LTP61 Multi Torque
Bolt capacity M12 – M42

Like the LTP51, the LTP61 is also available in a Multi Torque version.

All features of the LTP51 also apply to the LTP61.

In addition you get a tool that has twice the rundown speed.

Another feature is the reverse function that has fixed positions for both forward and reverse.

Model	Bolt size mm	Square drive in	Torque range at 5 bar Nm	Torque range at 5 bar ft lb	Min torque at 3 bar Nm	Min torque at 3 bar ft lb	Max torque at 6.3 bar Nm	Max torque at 6.3 bar ft lb	Free speed r/min	Weight[a] kg	Weight[a] lb	Length mm	CS distance mm	Air consumption at free speed l/s	Air consumption at free speed cfm	Air inlet thread in	Spline type	Ordering No.
LTP51 HR008-13-MT	M14	1/2	85 - 150	60 - 110	70	50	175	130	550	3.0	6.6	238	30	19	40	3/8	3	8431 0518 15
LTP51 HR004-20-MT	M18	3/4	200 - 270	145 - 200	145	105	320	235	255	3.9	8.6	275	34	19	40	3/8	4	8431 0518 31
LTP51 HR002-20-MT	M20	3/4	265 - 380	195 - 280	220	160	460	235	175	3.9	8.6	275	34	19	40	3/8	4	8431 0518 49
LTP51 HR001-25-MT	M24	1	450 - 700	330 - 510	300	220	900	660	100	4.3	9.5	305	34	19	40	3/8	5	8431 0518 21
LTP51 HR001-25-MT-FR	M24	1	450 - 700	330 - 510	300	220	900	660	100	4.3	9.5	305	34	19	40	3/8	5	8431 0518 22
LTP51 PHR0005-25-MT	M27	1	595 - 805	435 - 590	450	330	950	695	50	4.3	9.5	305	34	19	40	3/8	5	8431 0518 39
LTP51 HR0007-25-MT	M30	1	740 - 1100	545 - 810	700	516	1500	1106	55	6.6	14.6	345	42	19	40	3/8	9	8431 0518 53
LTP51 HR0005-38-MT	M30	1 1/2	1000 - 1500	720 - 1080	800	590	2000	1500	52	13.8	30	380	68	19	40	3/8	8	8431 0518 55
LTP51 HR0004-38-MT	M36	1 1/2	1500 - 2200	1080 - 1584	1200	890	3000	2200	36	13.8	30	380	68	19	40	3/8	8	8431 0518 58
LTP51 HR0003-38-MT	M42	1 1/2	2000 - 3000	1440 - 2160	1600	1200	4100	3000	26	13.8	30	380	68	19	40	3/8	8	8431 0518 60

FR – Fixed reverse

Model	Bolt size mm	Square drive in	Torque range at 6.3 bar Nm	Torque range at 6.3 bar ft lb	Min torque at 3 bar Nm	Min torque at 3 bar ft lb	Free speed r/min	Weight[a] kg	Weight[a] lb	Length mm	CS distance mm	Air consumption at free speed l/s	Air consumption at free speed cfm	Air inlet thread in	Spline type	Ordering No.
LTP61 HR100-13-MT	M12	1/2	55 - 100	40 - 75	45	35	1800	3.3	7.3	288	30	20	42	3/8	3	8431 0806 02
LTP61 HR170-13-MT	M14	1/2	95 - 170	70 - 125	70	50	1100	3.3	7.3	288	30	20	42	3/8	3	8431 0806 09
LTP61 HR230-19-MT	M16	3/4	125 - 230	90 - 170	85	60	820	3.3	7.3	288	34	20	42	3/8	4	8431 0806 16
LTP61 HR350-20-MT	M18	3/4	190 - 350	140 - 255	145	105	520	4.2	9.2	325	34	20	42	3/8	4	8431 0806 23
LTP61 HR500-20-MT	M20	3/4	275 - 500	200 - 370	220	160	360	4.2	9.2	325	34	20	42	3/8	4	8431 0806 30
LTP61 HR700-25-MT	M22	1	360 - 650	265 - 480	280	207	280	4.8	10.6	355	34	20	42	3/8	5	8431 0806 33
LTP61 HR900-25-MT	M24	1	480 - 870	350 - 640	300	220	210	4.8	10.6	355	34	20	42	3/8	5	8431 0806 37
LTP61 HR1500-25-MT	M30	1	850 - 1500	625 - 1100	700	516	115	7.1	15.6	395	42	20	42	3/8	9	8431 0806 44
LTP61 HR1900-38-MT	M30	1 1/2	1050 - 1900	770 - 1400	800	576	90	14.4	31.7	430	68	20	42	3/8	8	8431 0806 51
LTP61 HR2800-38-MT	M36	1 1/2	1550 - 2800	1140 - 2060	1200	864	65	14.4	31.7	430	68	20	42	3/8	8	8431 0806 58
LTP61 HR3800-38-MT	M42	1 1/2	2100 - 3800	1540 - 2790	1600	1152	50	14.4	31.7	430	68	20	42	3/8	8	8431 0806 65

[a] Without reaction bar.

ACCESSORIES INCLUDED
LTP51/61: Swivel type reaction bar

OPTIONAL ACCESSORIES
Page 67

SELECTED SERVICE KITS
Page 67

OPTIONAL ACCESSORIES

Model	Ordering No.	Model	Ordering No.
For LMP24		**For LTP51/61 / LMP51**	
Hose nipple	9000 0247 00	Hose nipple	9000 0242 00
Swivel attachment	4210 2249 80	Exhaust hose	4210 2201 00
Exhaust hose	4210 2053 00	Protective cover	
Support handle (for H/HR002 only)	4110 1355 82	Standard, LTP51/LMP51	4210 3044 00
Spindle extension		Standard, LTP61	4210 4672 00
115 mm x 1/2" (for H/HR002 only)	4210 2154 80	MT, LTP51	4210 3044 03
50 mm x 3/8" (for H/HR0011/005 only)	4210 2158 80	MT, LTP61	4210 4672 03
1/4" hex bit holder (for H/HR0011/005 only)	4021 0443 00	Multi torque selector, LTP51	4210 2269 95
1/2" square adapter (for H/HR0011/005 only)	4210 2157 80	Multi torque selector, LTP61	4210 4636 95
		Prevailing modification kit	
		for H/HR008, LTP/LMP51	4210 2592 80
		except H/HR008, LTP/LMP51	4210 2593 80
		Quick change retainer	
		– 1/2" square models	4250 1190 00
		– 3/4" square models	4210 3476 80
		– 1" square models	4210 3524 80
		Shut-off override for LTP51/61	4210 3545 80

Suspension yoke

Multi torque selector LTP51

Multi torque selector LTP61

Protective cover

Reaction bar blanks

Reaction bar, S type

Reaction bar, Sliding Drive type

Swivelling suspension yoke for LTP51/61 / LMP51

Model	Ordering No.	Model	Ordering No.
Mounting dia Ø 54 mm		**Ø 67 mm**	
LTP/LMP51 H 001-25	4210 3088 80	LTP/LMP51 HR 001-25	4210 3088 82
LTP/LMP51 H 002-20		LTP/LMP51 HR 002-20	
LTP/LMP51 H 004-20		LTP/LMP51 HR 004-20	
LTP/LMP51 H 006-19		LTP/LMP51 HR 0003-38	
LTP/LMP51 H 008-13		LTP/LMP51 HR 0004-38	
LTP/LMP51 H 012-13		LTP/LMP51 HR 0005-38	
LTP/LMP51 PH 001-20		LTP/LMP51 PHR 001-20	
LTP/LMP51 PH 003-19		LTP/LMP51 PHR 0005-25	
LTP/LMP51 PH 004-13		**Ø 63.5 mm**	
LTP/LMP51 PH 004-20		LTP/LMP51 H 0003-38	4210 3088 83
LTP/LMP51 PH 005-13		LTP/LMP51 H 0004-38	
LTP/LMP51 PH 0005-25		LTP/LMP51 H 0005-38	
Ø 83.5 mm		**Ø 60 mm**	
LTP/LMP51 H0007-25	4210 3088 81	LTP/LMP51 HR 006-19	4210 3088 84
LTP/LMP51 HR0007-25		LTP/LMP51 HR 008-13	
LTP/LMP51 PH 0003-25		LTP/LMP51 HR 012-13	
LTP/LMP51 PHR 0003-25		LTP/LMP51 PHR 003-19	
		LTP/LMP51 PHR 004-13	
		LTP/LMP51 PHR 005-13	

Reaction bars

Model	Square drive size	CC distance	Ordering No.
Aluminium			
LMP/LTP51 H012/H008)	–	–	4210 2219 01
Brackets			
Square models	1/2	–	4210 2219 03
Square models	3/4	–	4210 2183 01
Square models (0005-25)	1	–	4210 2726 01
Square models (0007-25)	1	–	4210 3899 00
S type			
Spline type 3	–	–	4210 4480 03
Spline type 4	–	–	4210 4480 04
Spline type 5	–	–	4210 4480 05
Spline type 6	–	–	4210 4480 06
Spline type 9	–	–	4210 4480 09
Sliding Drive			
Spline type 3	1/2	70-120	4210 4481 83
Spline type 4	3/4	76-126	4210 4481 84
Spline type 5	1	80-125	4210 4481 85
Spline type 9	1	80-130	4210 4481 89
Spline type 3	3/4	70-120	4210 4481 63

SELECTED SERVICE KITS

Model	Trigger kit	Valve kit	General service kit
LMP24	4210 1934 92	4110 1338 90	4081 0105 90
LMP51/LTP51/LTP61	4210 2190 90		4081 0106 90
LMD51/LTD51			4081 0106 90

TORQUE TRANSDUCERS AND CABLES

Electronic accessories

PRT torque transducers

The PRT torque transducers are intended for the reaction bar supported pistol and straight nutrunners type LMP, LTP and LTD.

PRT -C model has a 1.5 m pigtail connector cable.

PRT torque transducers

Model	Tool	Calibration torque 0.59 mV/V Nm	Calibration torque 0.8 mV/V ft lb	Ordering No.
PRT200C	LMP/LTP51/61-13, -19, LTD38 S003, LTD46	200	148	8092 1121 00
PRT500C	LMP/LTP51/61-20, LTD46	500	369	8092 1122 00
PRT1000C	LMP/LTP51/61-25	1000	738	8092 1123 00
PRT1500C	LMP/LTP51H/61H/HR0007-25	1500	1106	8092 1124 00

Cables

Atlas Copco has developed a special Kevlar reinforced cable to meet the demands for flexibility and wearing properties in portable tool applications. This cable design is standard in all factory mounted pigtail signal cables for torque, angle, lights and the built-in solenoid valve as well as in all the connection cables for the FOCUS 2000 instrument. The cables intended for continuous or semi-continuous monitoring of torque with the ACTA 3000 instrument are of conventional heavy-duty design, whereas the cable for spot checking with the ACTA 3000, the IRTT in-line torque transducer cables and control cable for the solenoid valve are standard laboratory quality.

Signal cable type	For Instrument	Length m	Number of pins Tool – Instrument	Ordering No.
Tool cables for continuous monitoring/control				
Torque only	FOCUS 2000	5	6-19	4145 0953 05
		10	6-19	4145 0953 10
		15	6-19	4145 0953 15
Torque/Angle/Signal light/ Solenoid combinations	FOCUS 2000	5	19-19	4145 0952 05
		10	19-19	4145 0952 10
		15	19-19	4145 0952 15
All 19 pin tool cables – extension	FOCUS 2000/ ACTA 3000	10	19-19	4145 0951 10
IRTT/ MRTT transducer cables				
	FOCUS 2000/ ACTA 3000	3	19-19	4145 0949 03
		10	19-19	4145 0949 10
Curled cable	ACTA 3000	3	19-19	4145 0971 03
Solenoid valve cable				
Control cable	FOCUS 2000	10	4	4210 3083 80

NOTE: Check number of connector pins on both instrument end and tool end to make sure the correct cable is ordered.

Electric assembly tools and systems

Right the first time...

The Atlas Copco range of electric and battery assembly tools, control systems and associated software packages define the global benchmark in smart, cost-efficient and error-proof assembly management.

Contents **Page**

Tool key 70
Industrial battery nutrunners/screwdrivers..... 74
Electric screwdriver Eliza..... 79
Electric screwdriver EBL..... 80
Electric screwdriver MicroTorque™..... 82
Electric screwdriver Tensor DL 85
Electric screwdriver Tensor SL 86
Electric nutrunners Tensor DS..... 87
Electric nutrunners Tensor S 93
Electric nutrunners Tensor ST 100
Tensor DS/DL controller 106
Power Focus..... 107
Power Focus / ETX..... 126
Power MACS 4000 129
Power MACS / QMX 140
Bits and power sockets..... 145
Torque arms..... 152

ELECTRIC ASSEMBLY TOOLS
Tool key

The tool key below explains the significance of the letters/numbers forming the name of the tool model.

Battery screwdriver – ETB

ETB — Battery screwdriver, pistol grip

6i — Torque (Nm)
i = torch lights
L = low speed

Battery screwdriver – BTV

B — B = Battery powered

T — T = Shut-off

V — V = Right angle

28 — Torque (Nm)

10

06 = 1/4", square drive
10 = 3/8", square drive
B10 = 3/8", square drive, ball retainer
42 = 1/4", hex. bit drive
Q = 1/4", hex. quick chuck
FS10 = flush socket hex. 10 mm A/F
FS13 = flush socket hex. 13 mm A/F
FS5/16 = flush socket hex 5/16" hex
HAD = Hold and Drive

Electric screwdriver – EBL

EBL — Electric brushless screwdriver,

03 — Torque

SS — SS = Soft-stop models
RE = Reporting models

Electric screwdriver – MicroTorque™

ETF — ETF = Fixtured
ETD = Hand-held

MT — M = "Digitork"
MT = Transducerized

100 — Torque (Ncm)

Electric screwdriver – Tensor DL

ETD — Electric shut-off
ETD = In line
ETV = Right angle
ETP = Pistol

DL — Technology
D = DigiTork control
L = Low voltage

2 — Motor size

1 — 1 = Generation

07 — Torque (Nm)

I — I = Female hex

06 — Square drive size
06 = 1/4"
10 = 3/8"

QC — Option
QC = Quick change chuck
PS = Push-to-start

Electric nutrunner – Tensor DS

E T D DS 7 1 30 B 10 S T

- E: Electric
- T: Shut-off
- D: V = Right angle; D = In-line; P = Pistol; F = Fixture; O = Open End; C = Crowfoot
- DS: Technology; DS = Digitork Non-transducer
- 7: 7 = Motor size
- 1: 1 = Generation
- 30: Torque (Nm)
- B: B = Ball retainer; I = Female hex; E = Extension between gear train & front part
- 10: Square drive size; 06 = 1/4", 10 = 3/8", 13 = 1/2", 20 = 3/4", 25 = 1", 38 = 1 1/2"
- S: S = Signal light (Always included)
- T: Option
  - E = Extended spindle
  - F = Fan
  - T = Telescopic
  - FS = Flush socket
  - HAD = Hold and Drive
  - TM = Torque multiplier
  - SH = Small head
  - M = Mounting extension for fixtures between gear train & front part
  - LO3 = Off-set with 3 gear wheels
  - LI3 = In-line with 3 gear wheels
  - SSW = Swivelling front part

Electric nutrunner – Tensor S

E T D S 7 1 30 B 10 T

- E: Electric
- T: Shut-off
- D: V = Right angle; D = In-line; P = Pistol; F = Fixture; O = Open End; C = Crowfoot
- S: Technology; S = Syncronized motor Transducer
- 7: 7 = Motor size
- 1: 1 = Generation
- 30: Torque (Nm)
- B: B = Ball retainer; I = Female hex; E = Extension between gear train & front part
- 10: Square drive size; 06 = 1/4", 10 = 3/8", 13 = 1/2", 20 = 3/4", 25 = 1", 38 = 1 1/2"
- T: CTADS
  - C = Controlled torque
  - T = Transducer
  - A = Angle encoder
  - D = Direct drive
  - S = Signal light (Always included)
- Option
  - E = Extended spindle
  - F = Fan
  - T = Telescopic
  - FS = Flush socket
  - HAD = Hold and Drive
  - TM = Torque multiplier
  - SH = Small head
  - M = Mounting extension for fixtures between gear train & front part
  - LO3 = Off-set with 3 gear wheels
  - LI3 = In-line with 3 gear wheels

Electric nutrunner – Tensor ST/SL

E T D ST 6 1 30 B 10 T

- E: Electric
- T: Shut-off
- D:
  - V = Right angle
  - D = In-line
  - P = Pistol
  - F = Fixture
  - O = Open End
  - C = Crowfoot
- ST:
  - Technology
  - ST = Syncronized motor
    Digital communication
    Transducer
  - SL = Syncronized motor
    Digital communication
    Transducer
    Low voltage
- 6: 6 = Motor size
- 1: 1 = Generation
- 30: Torque (Nm)
- B:
  - B = Ball retainer
  - I = Female hex
- 10: Square drive size
  - 06 = 1/4", 10 = 3/8"
  - 13 = 1/2", 20 = 3/4"
  - 25 = 1", 38 = 1 1/2"
- T: Option
  - E = Extended spindle
  - F = Fan
  - T = Telescopic
  - FS = Flush socket
  - HAD = Hold and Drive
  - TM = Torque multiplier
  - SH = Small head
  - L = Extension between gear train & front part
  - M = Mounting extension for fixtures between gear train & front part
  - LO3 = Off-set with 3 gear wheels
  - LI3 = In-line with 3 gear wheels
  - QC = Quick change chuck
  - PS = Push-to-start

Power Focus

PF 4 00 0 C DN

- PF: PF = Power Focus
- 4: Generation
- 00: Version
- 0: Motor size
- C:
  - C = Compact
  - G = Graph
- DN:
  - DN = DeviceNet
  - PB = Profi bus
  - IB = Interbus
  - MB = Modbus plus
  - EIP = Ethernet IP
    Modbus TCP
  - FLN = FL-Net
  - PN = Profinet

Fixtured nutrunner – QST

QST

Spindle Technology
Q = Fixtured spindle Transducer
ST = Syncronized motor Digital communication

50

Motor size
34 = Min CC 34 mm
42 = Min CC 43 mm
50 = Min CC 51 mm
62 = Min CC 63 mm
80 = Min CC 81 mm
90 = Min CC 91 mm
Offset spindle min CC is stated in specification

-150

Max torque (Nm)

COATT

C = Communication
U = U-nutrunner
O = Offset
A = Angle encode
T = Transducer
TT = Double transducer
V = Angle head
HAD = Hold & Drive gear train & front part
FS = Flush socket sion for fixtures between gear train & front part
CF = Crowfoot

Power MACS 4000

TC = Tightening controller

Version

S = Secondary
P = Primary

ES = Ethernet switch

TC 4 000 P DN ES

Generation

DN = DeviceNet
PB = Profi bus
IB = Interbus
EIP = Ethernet IP
MTCP = Modbus TCP

INDUSTRIAL BATTERY ASSEMBLY TOOLS

Shut-off control

Screw size **M3 – M8**
Torque range **0.9 – 28 Nm**

For productivity reasons air tools have generally been preferred in industrial applications due to the favourable power-to-weight ratio of the air motor. On industrial assembly lines today, however, the mode of operation has changed and many screws are best tightened with a battery tool that allows freedom to move along a running production line.

To meet the demands from industrial operation Atlas Copco has developed its own range of industrial battery tools, utilising know-how from building accurate and reliable industrial screwdrivers and combining this with new innovative technique in battery motor control.

BTV – battery angle nutrunners

The BTV battery angle nutrunner utilises the best of available techniques to allow a lightweight and handy battery tool, an extensive number of tightenings before recharging the battery, a service life that matches any other power tool and accuracy with electronic precision. Where portability is essential on your assembly line the BTV is the ideal match offering:

- **Torque accuracy** – Excellent torque repeatability, low mean shift and low reaction force.
- **Movability** – Freedom to move without air hose or electric cord to provide for the power. Freedom to work inside closed compartments, e.g. inside a vehicle.
- **Work protection** – Car body finish free from scratches from hoses and cords.
- **Work place arrangement** – High flexibility and rapid set-up.
- **A safe work place** – Free from interference of air hoses and risk of jammed electric cords.
- **Ergonomics** – Low sound level, clean for the operator and his working environment.

The BTV tools are equipped with a built in LED lamp for illuminating the screw head and simplify positioning.

ACD control – reliability, low wear and easy service

The ACD, Acoustic Clutch Detection, in the BTV battery tool uses a sophisticated electronic identification of the specific sound signature of the click when the clutch releases to short-circuit the electric motor and brake the rotation when tightening is finished. The lack of wearing mechanical switches, magnets and sensitive electronic components and the elimination of wiring between the mechanical clutch and the electronic control card means a considerable improvement in reliability, wearing properties and serviceability.

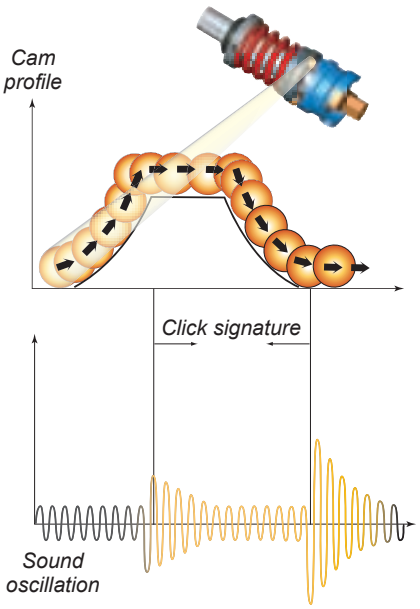

INDUSTRIAL BATTERY SCREWDRIVERS

Shut-off control

ETBi cordless pistol screwdrivers

The well-proven pistol screwdrivers ETBi use components of same high quality as in our pneumatic tools and electronic motor control adapted to industrial requirements. Common features are:

- **Certified accuracy** – Fast shut-off ensures tightening to the most demanding accuracy requirements.
- **High durability** – Industrial quality means reliability in operation and long service life.
- **Operator comfort** – Ergonomics and operation feedback with light signals contribute to outstanding performance.
- **Low mean-shift** – Clutch design ensures same torque on hard and soft joints throughout the full torque range.
- **Theft protection option** – Models offering electronic theft protection lock the tool on battery charging unless reactivated by a coder.

Green light = proper tightening!
A green light and the "click" sound tells the operator that the clutch has released and the tightening is OK.

Red light = time to recharge!
A flashing red light gives an early warning when it is time for recharging. All tools have protection to prevent start when there is not enough battery charge. This means that there is no risk for drop in applied torque due to low battery.

Innovative lights

Torch light now standard – The ETB tools are now also equipped with a built-in LED lamp for illuminating the screw head and simplify positioning when working in confined spaces. The led lamps are placed in an optimal way to avoid disturbing shadows.

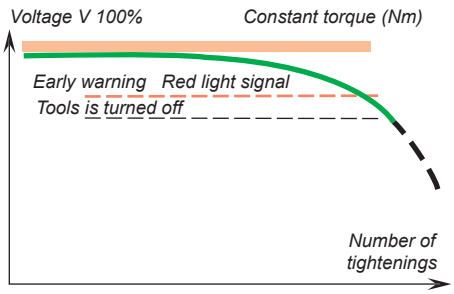

Protection against tightening torque drop due to low battery voltage.

INDUSTRIAL BATTERY SCREWDRIVERS

Shut-off control

Battery tools – BTV and ETB

- **High durability** – Industrial quality means reliability in operation and long service life.
- **Ergonomics** – A good balance and grip gives the best operator comfort which enhance productivity.
- **Torque accuracy** – Excellent torque repeatability, low mean shift and low reaction force.

Model	Screw size mm	Recommended torque range Nm	Recommended torque range in lb	Free speed 9.6 V r/min	Free speed 12 V r/min	Free speed 14.4 V r/min	Weight excl. batttery kg	Weight excl. batttery lb	Tool only Ordering No.	PROT version tool only Ordering No.
BTV – shut-off										
BTV7i-6	M3-M5	2 - 7	18 - 62	350	450	–	1.4	3.0	8431 0261 40	8431 0261 52
BTV7i-42	M3-M5	2 - 7	18 - 62	350	450	–	1.4	3.0	8431 0261 44	8431 0261 53
BTV7i-Q	M3-M5	2 - 7	18 - 62	350	450	–	1.4	3.0	8431 0261 49	8431 0261 54
BTV11i-6	M4-M6	4 - 11	36 - 97	300	380	–	1.4	3.0	8431 0261 55	8431 0261 59
BTV11i-42	M4-M6	4 - 11	36 - 97	300	380	–	1.4	3.0	8431 0261 56	8431 0261 60
BTV11i-Q	M4-M6	4 - 11	36 - 97	300	380	–	1.4	3.0	8431 0261 57	8431 0261 61
BTV11i-10	M4-M6	4 - 11	36 - 97	300	380	–	1.4	3.0	8431 0261 58	8431 0261 64
BTV15i-6	M6	8 - 15	70 - 132	–	340	410	1.7	3.7	8431 0261 65	8431 0261 69
BTV15i-42	M6	8 - 15	70 - 132	–	340	410	1.7	3.7	8431 0261 72	8431 0261 76
BTV15i-Q	M6	8 - 15	70 - 132	–	340	410	1.7	3.7	8431 0261 73	8431 0261 77
BTV15i-10	M6	8 - 15	70 - 132	–	340	410	1.7	3.7	8431 0261 68	8431 0261 78
BTV28i-42	M8	15 - 28	132 - 248	–	210	260	1.8	4.0	8431 0261 79	8431 0262 10
BTV28i-10	M8	15 - 28	132 - 248	–	210	260	1.8	4.0	8431 0261 80	8431 0262 11
BTV28i-B10	M8	15 - 28	132 - 248	–	210	260	1.8	4.0	8431 0261 83	8431 0262 12
BTV28i-Q	M8	15 - 28	132 - 248	–	210	260	1.8	4.0	8431 0261 86	8431 0262 14
BTV28i-FS10	M8	15 - 28	132 - 248	–	210	260	1.8	4.0	8431 0261 89	–
BTV28i-FS13	M8	15 - 28	132 - 248	–	210	260	1.8	4.0	8431 0261 92	–
BTV28i-FS15/16	M8	15 - 28	132 - 248	–	210	260	1.8	4.0	8431 0261 95	–
BTV28i-HAD	M8	15 - 28	132 - 248	–	210	260	1.8	4.0	8431 0261 98	–
ETB – screwdrivers with shut-off. Pistol grip models										
ETB4i	M3-M5	0.9 - 4.5	8 - 40	800	970	–	1.2	2.6	8431 0272 46	8431 0272 47
ETB6i	M3-M5	1.9 - 7	16 - 62	520	620	–	1.2	2.6	8431 0272 41	8431 0272 44
ETB6Li	M3-M5	1.9 - 7	16 - 62	290	360	–	1.2	2.6	8431 0272 48	–
ETB10i	M4-M6	3 - 10	26 - 90	360	480	–	1.2	2.6	8431 0272 42	8431 0272 43

(ETB6/10: For low torque 1-3.5 Nm use optional clutch spring 4210 3690 90. **NOTE**: The torque marking system is adapted to standard spring)

All pistol grip models have 1/4" female hexagon drive for bits with quick change chuck.

INDUSTRIAL BATTERY SCREWDRIVERS
Accessories

Modular battery system

Battery standard – Basic battery standard is 9.6 V for the screwdriver sizes ETB and BTV7 and 11. The tools can also be powered with a 12 V battery to increase speed by approximately 25%. The angle nutrunner models BTV15 and BTV28 are designed for 14.4 V battery.

Charger standard – Chargers are of pulse types that ensures long battery life.

Multiple charger system – By assembly of standard chargers on a common bracket a multiple charger system can be built up. A mounting bracket for up to five chargers or four chargers and a theft decoder is available to order.

	Voltage	Capacity	Weight gram	Ordering No.
Battery	9.6 V	2.0 Ah	570	4210 3680 02
	12 V Flat pack	1.4 Ah	500	4210 3680 03
	12 V	2.0 Ah	730	4210 3680 05
	14.4 V	2.0 Ah	800	4210 3680 06

12 V Flat pack / 1.4 Ah

12 V / 2.0 Ah

14.4 V / 2.0 Ah

9.6 V / 2.0 Ah

Batteries

Pulse chargers		
15/23 min (1.4/2.0 Ah)	230/240 V	4210 3676 10
25/36 min (1.4/2.0 Ah)	110/120 V	4210 3676 20
1/1.3 hour (1.4/2.0 Ah)	230/240 V	4210 3676 00
Mounting bracket for multiple charger		
Euro-contact	230/240 V	4210 3677 00
US-contact	110/120 V	4210 3677 01
NOTE: Chargers are bought separately.		
Decoder kit		
Decoder kit	230/240 V	4210 3679 90
Decoder kit	110/120 V	4210 3679 91
Protective cover ETB		4210 3810 00
Suspension yoke		
ETB		4211 5000 80
BTV (swivelling)		4211 5080 80

Pulse charger

Decoder

Angle head for ETB (gear ratio 1:1.56)
NOTE: Torque will increase 50% when angle head is used.

1/4" female hexagon drive for bits	4210 1875 88
3/8" square drive for sockets	4210 1875 89
1/4" square drive for sockets max 7 Nm	4110 1404 76
30° angle head for ETB (up to 7 Nm) Quick change chuck for female bits	4110 1436 84

Colour torque system

The Atlas Copco colour torque system gives you an easily visible torque marking system for all your ETB tools. Select a unique colour combination for each torque level used on your assembly line.

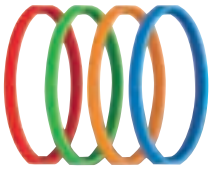

Colour torque marking rings

Red	4210 3795 02
Green	4210 3795 04
Blue	4210 3795 06
Orange	4210 3795 08

Protective cover

ELECTRIC SCREWDRIVERS

Low voltage electric screwdrivers and nutrunners

Atlas Copco offers a complete range of electrically powered assembly tools, including battery screwdrivers and nutrunners, and small transformer powered screwdrivers.

Low-voltage electric motors have their obvious place as the power source for battery screwdrivers and nutrunners. Low-voltage electric screwdrivers – powered from the mains via a transformer and rectifier – are often preferred for tightening small screws in industrial applications where a clean, low-noise environment is the primary demand.

Shut-off electric screwdrivers

The low-voltage screwdriver is characterized by its reliable operation. The basic design has remained the same for many years but upgrades have been made on premium values such as ESD certification as standard, new soft-stop models and soft-touch grip – features that improve product quality and increase operator comfort. The selection of a low-voltage system also ensures the highest level of safety against electric shock in operation and maintenance.

ESD certified screwdrivers

Atlas Copco offers ESD certified tools in the standard range of screwdriver models most frequently used in the electronics industries. ESD certification means a guarantee against damage of electronic components by an uncontrolled electrostatic discharge (ESD) from the tools.

Conformity to the requirements of IEC 61340-5-1 standard proposal is approved by SP, the Swedish National Testing and Research Institute. In practice it certifies that at no point will the material of the equipment hold an electrostatic potential above 100 V for more than 2 seconds.

ELECTRIC SCREWDRIVERS

Eliza – Clutch type

Screw size **M1 – M4**
Torque range **0.03 – 3.4 Nm**

The Eliza electric screwdrivers are the ideal choice in the electronic industry, among small components manufacturers, the appliance industry and other industries where cleanliness in operation, ease of installation, low noise level and limited total investment are essential.

- **Ergonomic** – Soft touch grip, low weight, small dimensions, perfect balance, a minimum of vibration and reaction force.
- **Accurate** – Combined mechanical clutch and electric shut-off provides for excellent torque repeatability.
- **High productivity** – Careful balance between speed and torque, electrically and mechanically dimensioned for continuous production, meet the highest demands for production rate and service life.
- **ESD certified** – Dissipative plastic casing and electric connection of the tool body to ground potential prevent static electricity from being built up in or on the face of the tool and discharge to sensitive electronic components.
- **Safe** – Via a transformer the tools are powered by a mere 30 VDC, which means that there is no risk for dangerous electric chock in operation or during service and maintenance.

- **Soft stop options** – This model features a modified clutch and gear package for those applications where shock sensitive electronic devices might be harmed by the vibrations from the clutch action. The smooth shut-off also reduces the jerk to the hand of the operator.

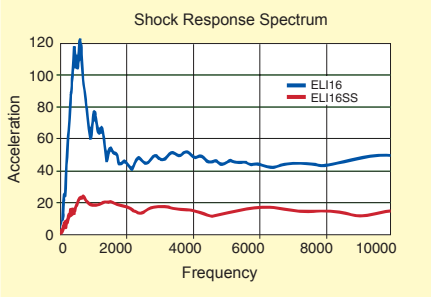

Model	Screw capacity	Torque range Soft joint Nm	Torque range Soft joint in lb	Free speed r/min	Weight kg	Weight lb	Length mm	Bit drive	Ordering No.
Trigger start screwdrivers (excl. control box)									
ELI006	M1.0-2.0	0.03 - 0.2	0.3 -1.7	1000	0.35	0.8	183	Ø 4 mm	8431 0156 06
ELI06	M1.2-2.5	0.05 - 0.5	0.4 -4.4	1000	0.38	0.8	197	1/4 hex	8431 0156 00
ELI16	M2-3	0.15 - 1.6	1.3 - 14	825	0.6	1.4	235	1/4 hex	8431 0156 18
ELI26	M2.5-4	0.3 - 2.5	2.6 - 22	700	0.7	1.5	255	1/4 hex	8431 0156 26
ELI36	M2.5-4	0.4 - 3.4	3.5 - 30	700	0.6	1.4	235	1/4 hex	8431 0156 34
Push start screwdrivers (excl. control box)									
ELI16-P	M2-3	0.15 - 1.6	1.3 - 14	825	0.6	1.4	235	1/4 hex	8431 0156 42
ELI26-P	M2.5-4	0.3 - 2.5	2.6 - 22	700	0.7	1.5	255	1/4 hex	8431 0156 59
ELI36-P	M2.5-4	0.5 - 1.8	4.3 - 16	1500	0.6	1.4	235	1/4 hex	8431 0156 63
Soft-stop screwdrivers with trigger start (excl. control box)									
ELI06-SS	M1.4-2.5	0.1 - 0.44	0.9 -3.9	1000	0.4	0.9	197	1/4 hex	8431 0156 67
ELI16-SS	M2-3	0.25 - 1.3	2.2 - 11	825	0.6	1.4	235	1/4 hex	8431 0156 75
ELI26-SS	M2.5-3	0.5 - 1.7	4.4 - 15	700	0.7	1.5	255	1/4 hex	8431 0156 83
Control boxes ESD certified									
CBE50	Controller for single ELI006, 06, 16 or 26 models								8431 0164 09
CBE65	Controller for single ELI36 models								8431 0164 17
CBE50-S	Slow start controller for single ELI006, 06, 16 or 26 models								8431 0164 25
Transformers									
PFS60-ESD	For single ELI006, 06, 16 or 26 models – 230/22 V. ESD certified								8431 0160 11
PFS60-ESD-115	For single ELI006, 06, 16 or 26 models – 115/22 V. ESD certified								8431 0160 13
PFS151	For ELI36 models and power network – 230/22 V. **Not ESD certified**[ab]								8431 0160 15
PFS151-115	For ELI36 models and power network – 115/22 V. **Not ESD certified**[ab]								8431 0161 15
HT150	"High Tension" transformer – 230/24 V. **Not ESD certified**[abc]								8431 0161 24
Power packages ESD certified									
CTB50	Transformer and controller for single ELI006, 06, 16 or 26 models								8431 0162 01
CTB65	Transformer and controller for single ELI36 models								8431 0162 19
CTB100	Transformer and controller for two ELI006, 06, 16 or 26 models								8431 0162 27

[a] In EPA (Electrostatic Protected Area) use power package CTB65 for ELI36 or distantly placed HT150.
[b] PFS151 has double socket connection.
[c] Use HT150 to compensate for voltage drop due to long distance between transformer and controller.

ELECTRIC SCREWDRIVERS

EBL – Brushless clutch type

The new leader for low-torque assembly operations

Cutting-edge ergonomics and the latest technology: Atlas Copco's EBL screwdriver is setting new standards for electric low-torque screwdrivers. The brushless motor will still be performing long after its traditionally powered competitors have literally burnt out. The unique patented ergonomics provide unrivalled operator comfort. The combination of the two ensures increased productivity, making the EBL the smart choice for demanding low-torque operations.

Superior life-span

The brushless motor provides two key benefits: longer unit life and pollution-free operation.

Reporting tool models

The batch count feature ensures that all screws have been tightened.

Soft-stop models

The soft-stop feature prevents damage to sensitive electronics and plastic assembly components.

Comfortable grip

Low tool weight and lower noise level due to the brushless motor. Operators will appreciate these ergonomic benefits.

Model	Screw capacity	Torque range Soft joint Nm	Torque range Soft joint in lb	Free speed r/min	Weight kg	Weight lb	Length mm	Bit drive	Ordering No.
Standard models									
EBL03	M1-2	0.05 - 0.3	0.4 - 2.7	870	0.3	0.7	185	Ø 4 mm	8431 0170 02
EBL03-Q	M1-2	0.05 - 0.3	0.4 - 2.7	870	0.3	0.7	185	1/4 hex	8431 0170 04
EBL12	M2-3	0.2 - 1.2	1.8 - 10.6	910	0.5	1.1	215	1/4 hex	8431 0170 11
EBL12-1500	M2-3	0.2 - 1.2	1.8 - 10.6	1500	0.5	1.1	215	1/4 hex	8431 0170 41
EBL20	M2-3	0.5 - 2.0	4.5 - 18	750	0.5	1.1	215	1/4 hex	8431 0170 16
EBL25	M2.5-4	1.0 - 2.5	8.8 - 22.1	930	0.8	1.8	235	1/4 hex	8431 0170 23
EBL35	M2.5-4	1.0 - 3.5	8.8 - 31	700	0.8	1.8	235	1/4 hex	8431 0170 33
Reporting tool models									
EBL03-RE	M1-2	0.05 - 0.3	0.4 - 2.7	870	0.3	0.7	185	Ø 4 mm	8431 0170 55
EBL12-RE	M2-3	0.2 - 1.2	1.8 - 10.6	910	0.5	1.1	215	1/4 hex	8431 0170 13
EBL25-RE	M2.5-4	1.0 - 2.5	8.8 - 22.1	930	0.8	1.8	235	1/4 hex	8431 0170 26
EBL35-RE	M2.5-4	1.0 - 3.5	8.8 - 31	700	0.8	1.8	235	1/4 hex	8431 0170 36
Soft-stop models									
EBL03-SS	M1-2	0.05 - 0.3	0.4 - 2.7	870	0.3	0.7	185	Ø 4 mm	8431 0170 07
EBL12-SS	M2-3	0.2 - 1.2	1.8 - 10.6	910	0.5	1.1	215	1/4 hex	8431 0170 15
EBL25-SS	M2.5-4	1.0 - 2.5	8.8 - 22.1	930	0.8	1.8	235	1/4 hex	8431 0170 28
EBL35-SS	M2.5-4	1.0 - 3.5	8.8 - 31	700	0.8	1.8	235	1/4 hex	8431 0170 38
Soft-stop Reporting models									
EBL03-SS-RE	M1-2	0.05 - 0.3	0.4 - 2.7	870	0.3	0.7	185	Ø 4 mm	8431 0170 08
EBL12-SS-RE	M2-3	0.2 - 1.2	1.8 - 10.6	910	0.5	1.1	215	1/4 hex	8431 0170 17
EBL25-SS-RE	M2.5-4	1.0 - 2.5	8.8 - 22.1	930	0.8	1.18	235	1/4 hex	8431 0170 29
EBL35-SS-RE	M2.5-4	1.0 - 3.5	8.8 - 31	700	0.8	1.18	235	1/4 hex	8431 0170 39

All tools models, drives and cables are ESD and UL certified.
Tool box include cable for drive connection (standard models with 5 pins cable and reporting models with 6 pins cable)
All the models are push-to-start or lever start configurable.

Drives

Model		Ordering No.
EBL Drive	For standard models and soft-stop models	8431 0170 70
EBL RE-Drive	For reporting models and soft-stop + reporting models	8431 0170 75

EBL -RE Drive

EBL Drive

ELECTRIC SCREWDRIVERS
Accessories

Screw pick-up system
Picking and positioning of screws are many times crucial for productivity in small screw assembly. The optional equipment offers a vacuum pick-up system to simplify pre-tightening preparations. The system consists of a vacuum pump, adapters for the screwdriver a shaker tray and grids for different screw dimensions.

Vacuum pick-up adapters
Screwdrivers can be equipped with vacuum pick-up adapters ready to connect to a vacuum pump. The adapters are delivered without nozzles.

Nozzle blanks
They must be machined to fit the specific screw to be picked up.

Shaker tray and grid plate

Vacuum pick-up accessories (not ESD approved)	Ordering No.
Vacuum pump - 220V	4220 0062 00
Vacuum pick-up adapter for ELI06	4220 0052 00
Vacuum pick-up adapter for ELI16/26/36	4220 0053 00
Nozzle blank Ø 8 mm for ELI06, EBL03	4220 0067 03
Nozzle blank Ø 8 mm for ELI16/26/36, EBL 12, 25, 35	4220 0070 03
Nozzle blank Ø 14 mm for ELI16/26/36, EBL 12, 25, 35	4220 0072 03
Vacuum pick-up adapter for EBL 03	4220 0080 30
Vacuum pick-up adapter for EBL 12	4220 0080 31
Vacuum pick-up adapter for EBL 25/35	4220 0080 33

Shaker tray
Consists of a rubber box. A variety of interchangeable rubber grid plates should be ordered separately. (see table below)

Ordering No. 4220 0054 00

Grid plate

Screw size mm	Ordering No.	Screw size mm	Ordering No.
1.2/1.4	4220 0055 00	2.6	4220 0059 00
1.7	4220 0056 00	3.0	4220 0060 00
2.0	4220 0057 00	4.0	4220 0061 00
2.3	4220 0058 00		

Connectors ISO standard
To build your own 22 V AC network. With these components and an ordinary two core cable, min 1.5 mm^2, you can quickly arrange the electric supply for a series of screwdrivers.

Designation	Ordering No.
Male plug	4220 0095 00
2-way female socket For wall mounting (Not ESD approved)	4220 0096 00

Angle head for EBL

Model	Ordering No.
Square drive 1/4" (06)	4210 4033 80
Hex bit drive 1/4" (42)	4210 4033 81
Hex quick change 1/4" (Q)	4210 4033 82
Adapter[a] (ESD approved)	4210 4609 80

[a] Need to be ordered separately.

Cables

	Ordering No.
Cable (not ESD approved)	
Spiral cable, 1.3 m (5 pin)	4220 0347 00
Spiral cable, 1.3 m (6 pin)	4216 0131 00
Heavy duty, cable 2.0 m (5 pin)	4216 0132 00
Heavy duty, cable 2.0 m (6 pin)	4216 0133 00
Cable (ESD approved)	
Extension cable[b] 3.0 m (5 pin)	4220 0138 01
Extension cable[b] 3.0 m (6 pin)	4216 0115 00

[b] Maximum total length 8 m.

Pistol grip
Pistol grip handle is available for models

Model	Ordering No.
ELI16, 26 and 36	4220 0051 00
EBL 12	4220 0051 04
EBL 25, 35	4220 0051 05
(ESD approved)	

Angle head for Eliza
Eliza screwdriver models ELI16, 26 and 36 can be equipped with a 90° angle head for access in cramped quarters.

Ordering No. 4220 0425 80

Push start ELI06
The push start function is also available for the ELI06 size by mounting a sliding grip sleeve replacing the standard trigger start.

(Not ESD approved)

Ordering No. 4220 0106 00

SERVICE KITS

Model	Small parts kit	Brush kit
ELI06	4220 0030 90	4220 0022 90
ELI16/26/36	4220 0049 90	4220 0041 90
ELI16P/26P	4220 0049 90	4220 0041 90
EBL	4216 0049 90	–

ELECTRIC SCREWDRIVERS

MicroTorque™

Secure your small screw joints, from 0.5 Ncm

Ultra low-torque applications, starting at 0.5 Ncm, don´t need to be demanding. Electric screwdrivers in the MicroTorque range from Atlas Copco are designed to perform consistently and precisely, time after time. Whether you are manufacturing high-value consumer goods or sensitive electronics, the specifications of the MicroTorque range have been carefully selected to match your commercial needs, making micro torque more of a science and less of an art.

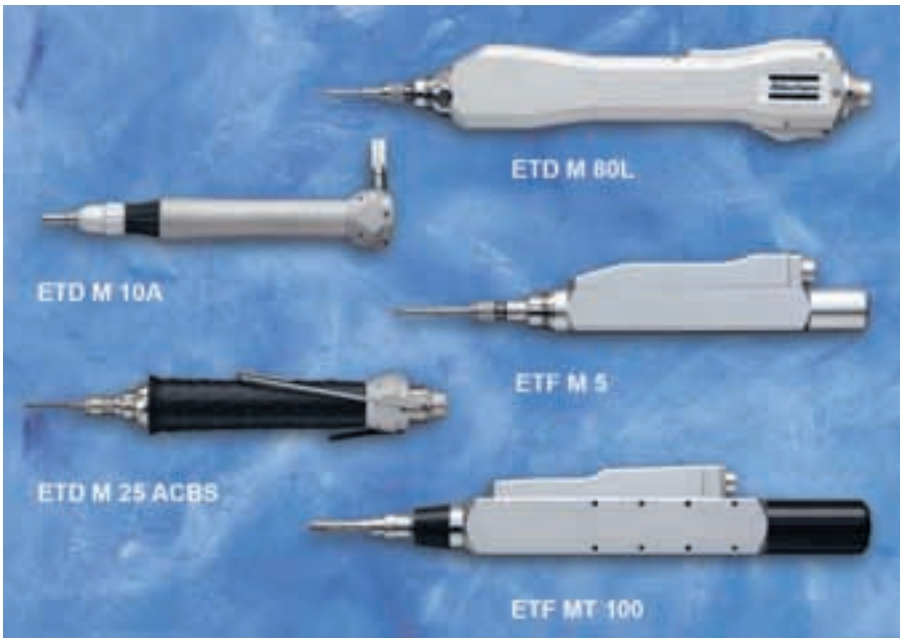

MicroTorque™ controller

Compact controller

- Tightening strategy with programming in one to eight independent steps.
- 16 different P-sets.
- Torque, angle and speed control.
- Additional external torque/angle transducer control.
- Configurable display.
- Operator feedback on the process.
- Supports PC/ToolsTalk MT.
- Communication via USB or RS232.
- "Digitork" / transducerized compatible.
- Fixed 12 inputs / 8 output digital signals.

Model	Torque range Ncm	Torque range in lb	Speed range min^{-1}	Length mm	Overall width mm	Weight kg	Weight lb	Bit drive	Ordering No.
Fixtured transducerized									
ETF MT 5	0.5 - 5	0.04 - 0.4	600	184	20	0.4	0.90	HM 4 mm	8432 0800 10
ETF MT 10	1 - 10	0.09 - 0.9	600	184	20	0.4	0.90	HM 4 mm	8432 0800 11
ETF MT 20	2 - 20	0.18 - 1.8	800	184	20	0.4	0.90	HM 4 mm	8432 0800 12
ETF MT 50	5 - 50	0.44 - 4.4	1000	255	30	0.76	1.67	HM 4 mm	8432 0800 13
ETF MT 80	8 - 80	0.71 - 7.1	1200	274	30	1.18	2.60	HM 4 mm	8432 0800 14
ETF MT 100	10 - 100	0.88 - 8.8	1000	274	30	1.18	2.60	1/4" HEX	8432 0800 15
ETF MT 200	20 - 200	1.77 - 17.7	800	274	30	1.18	2.60	1/4" HEX	8432 0800 16
ETF MT 500	50 - 500	4.42 - 44.2	500	260	40	1.84	4.05	1/4" HEX	8432 0800 17
Hand-held "Digitork"									
ETD M 03 A	0.5 - 2.5	0.04 - 0.2	1000	132	16	0.1	0.22	Ø 2 mm	8432 0810 05
ETD M 05 A	1.5 - 5	0.13 - 0.4	750	132	16	0.1	0.22	Ø 2 mm	8432 0810 06
ETD M 10 A	3 - 10	0.27 - 0.9	750	132	16	0.1	0.22	Ø 2 mm	8432 0810 08
ETD M 25 AVB[a]	7.5 - 25	0.66 - 2.2	750	174	22	0.25	0.55	HM 4 mm	8432 0810 09
ETD M 25 ACBL[a]	7.5 - 25	0.66 - 2.2	750	174	22	0.25	0.55	HM 4 mm	8432 0810 26
ETD M 25 ACBS[a]	7.5 - 25	0.66 - 2.2	750	174	22	0.25	0.55	HM 4 mm	8432 0810 27
ETD M 25 AVL[a]	7.5 - 25	0.66 - 2.2	750	174	22	0.25	0.55	HM 4 mm	8432 0810 28
ETD M 25 AVS[a]	7.5 - 25	0.66 - 2.2	750	174	22	0.25	0.55	HM 4 mm	8432 0810 29
Hand-held "Digitork", push-start configurable									
ETD M 40 L	10 - 40	0.71 - 3.6	850	240	27	0.65	1.43	HM 4 mm	8432 0810 25
ETD M 50 L	15 - 50	1.33 - 4.4	850	220	27	0.65	1.43	HM 4 mm	8432 0810 10
ETD M 80 L	16 - 80	1.42 - 7.1	850	240	27	0.65	1.43	HM 4 mm	8432 0810 11
ETD M 100 L	25 - 100	2.21 - 8.8	700	240	27	0.65	1.43	1/4" HEX	8432 0810 12
ETD M 200 L	50 - 200	4.42 - 17.7	700	240	27	0.65	1.43	1/4" HEX	8432 0810 13
ETD M 250 L	75 - 250	6.62 - 23.5	600	240	27	0.65	1.43	1/4" HEX	8432 0810 24
Fixtured "Digitork"									
ETF M 05	1.5 - 5	0.13 - 0.4	800	184	20	0.4	0.90	HM 4 mm	8432 0810 15
ETF M 10	3 - 10	0.27 - 0.9	500	184	20	0.4	0.90	HM 4 mm	8432 0810 16
ETF M 20	5 - 20	0.44 - 1.8	650	184	20	0.4	0.90	HM 4 mm	8432 0810 17
ETF M 50	15 - 50	1.33 - 4.4	850	230	25	0.8	1.76	HM 4 mm	8432 0810 18
ETF M 80	16 - 80	1.42 - 7.1	850	272	30	1.2	2.64	HM 4 mm	8432 0810 19
ETF M 100	25 - 100	2.21 - 8.8	700	272	30	1.2	2.64	1/4" HEX	8432 0810 20
ETF M 200	50 - 200	4.42 - 17.7	600	272	30	1.2	2.64	1/4" HEX	8432 0810 21
ETF M 400	150 - 400	13.27 - 35.4	320	260	40	1.8	3.96	1/4" HEX	8432 0810 22
ETF M 800	300 - 800	26.55 - 70.8	300	322	45	2.6	5.73	1/4" HEX	8432 0810 23

[a] ETD M 25 AXXX line: C - tool cable, V-integrated vacuum hose, L- long lever, S- short lever.

NOTE: "Complete system" (single ordering number) includes: Controller, screwdriver, tool cable, Tools Talk MT, USB communication cable and power supply.

Controller accessories

Model	Ordering No.
Combi (Remote control + program selector)	8432 0830 88
Remote control	8432 0830 08
Digital program selector	8432 0830 34
Vacuum pump, VPX 3	8432 0830 05
Vacuum pump, VPX 6	8432 0830 06
Controller fixture table	8432 0830 84
Controller fixture wall	8432 0830 32
Footswitch	8432 0830 07
Desktop socket (with screwdriver presence sensor)	8432 0831 89

For our vacuum adapter please consult your local Atlas Copco representative.

For torque arm program see page 159.

Tool cable

Model	Ordering No.
M-L Tool - 2 m	8432 0830 37
MT/M/M-A Tool - 2 m	8432 0830 36
M-L Tool - 3.5 m	8432 0831 02
MT/M/M-A Tool - 3.5 m	8432 0831 01

Cable accessories

Model	Ordering No.
Cable, RS232	8432 0830 38
Cable, USB	8432 0830 39
Transducer cable	8432 0830 35

Software

Model	Ordering No.
Tools Talk MT (for programming)	8432 0830 30
Tools Talk MT Analysis (for graph analysis)	8432 0830 31
Tools Talk MT Analysis/Net (for graph analysis and data collection)	8432 0830 45

Shaker tray

Type	Slot mm	Ordering No.
SGQ Large[a] (110x110x35 mm)		
SGQ 15	1.5	8432 0830 09
SGQ 20	2	8432 0830 10
SGQ 25	2.5	8432 0830 11
SGQ 30	3	8432 0830 12
SGQ 35	3.5	8432 0830 13
SGQ 40	4	8432 0830 14
SGQ 45	4.5	8432 0830 15
SGQ 50	5	8432 0830 16
SGQ 55	5.5	8432 0830 17
SGQ 60	6	8432 0830 18
MSG Small[b] (70x70x15 mm)		
MSG 05	0.5	8432 0830 19
MSG 06	0.6	8432 0830 20
MSG 07	0.7	8432 0830 21
MSG 08	0.8	8432 0830 22
MSG 09	0.9	8432 0830 23
MSG 10	1.0	8432 0830 24
MSG 11	1.1	8432 0830 25
MSG 12	1.2	8432 0830 26
MSG 13	1.3	8432 0830 27
MSG 14	1.4	8432 0830 28
MSG 15	1.5	8432 0830 29

[a] SGQ type (big version): For screws up to 30 mm lenght. From Ø 1.5 up to Ø 6 mm.

[b] MSG type (small version): For screws up to 10 mm lenght. From Ø 1.5 up to Ø 6 mm.

Digital program selector

VPX 6 vacuum pump

Remote control

VPX 3, vacuum pump

Tool cable

Controller fixture wall

Controller fixture table

Footswitch

Shaker tray box

Desktop socket

TENSOR

Electrically controlled screwdrivers and nutrunners

Tensor – there is a tool for every application

The Tensor electrical tool range covers all assembly line requirements for safety- and quality-critical fasteners. All industries with assembly operations have one thing in common – demanding customers who insist on quality and value for money. The Tensor range has been developed to give you the benefits of controlled tightening and advanced electric systems.

- **Productivity gains** – The Tensor means faster spindle speeds, lower cycle times and higher cycle rates.
- **Green light for quality** – No more forgotten screws and faulty fasteners. The green light from the Tensor will make sure that you don't jeopardize your assembly quality.
- **Exceptional ergonomics** – The balance, grip and low weight makes them a favorite on the assembly line.
- **Cut costs with Tensor** – Less maintenance, lower operating costs and reduction of down time, makes the Tensor the lowest life cycle cost tool in the industry.

With available torques ranging from 0.3 to 4000 Nm, the Tensor range of multi-torque electrical tools can be used to equip an entire facility.

Five tool ranges cover all application demands:

Tensor DL: quality-critical

The Tensor DL range is used for quality-critical screws. Optimized for small screw assembly, the DL is the electrical choice in the low torque segment.

Tensor SL: safety-critical low torque

The Tensor SL range is optimized for safety-critical small screw assembly. It offers compact screwdriver ergonomy combined with traceability and error proofing capabilities.

Tensor DS: quality-critical

Tensor DS is used for quality-critical fasteners not requiring a traceable measured torque value. DS offers major productivity and quality gains compared with conventional tooling.

Tensor S: safety-critical/traceable feedback

The Tensor S is designed for safety-critical applications where there is a requirement for traceable torque value, which can be recorded to confirm that the fastener was fastened to the specific torque.

Tensor ST: top of the line

Also used for safety-critical applications demanding a traceable torque value, the Tensor ST range complements the S range, ensuring extremely high level of productivity, ergonomic benefits and error proofing functionality.

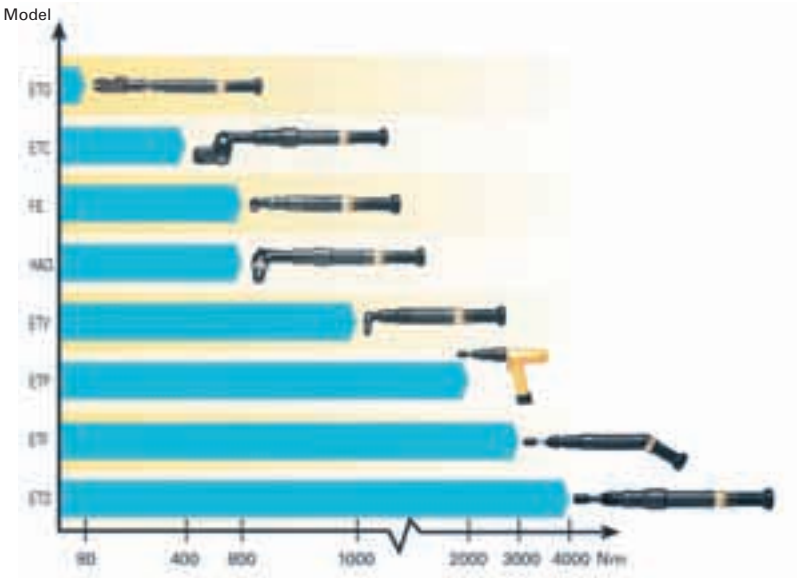

TENSOR DL

Electric screwdrivers

Tensor DL screwdrivers exist in four different tool configurations:

ETD – Straight screwdrivers with configurable function button. Available as lever and push to start.

ETV – Right angle screwdrivers with lever start and configurable function button.

ETP – Pistol grip handle screwdriver with configurable function button. Available as lever and push to start.

ETF – Straight screwdrivers for fixtured applications. Configurable lever or remote start.

- The DL screwdriver range has been optimized for small screw assembly.
- Torque range up to 12 Nm.
- All tools have ESD certification.
- Ergonomic design promotes operator safety.
- Brushless motor gives long service intervals and low maintenance costs.
- Signal lights ensure detection of incorrectly tightened fasteners.

Model	Torque Nm	Torque in lb	Speed r/min	Weight kg	Weight lb	Length mm	CS distance[a] mm	Ordering No.
Straight tools (lever start)								
ETD DL21-04-I06	1 - 4	8.8 - 35.4	1600	0.6	1.3	235	18 / 19.5	8433 4014 25
ETD DL21-07-I06	2.2 - 7.5	19.5 - 66	970	0.6	1.3	235	18 / 19.5	8433 4017 31
ETD DL21-10-I06	3 - 10	26.6 - 88.5	720	0.6	1.3	235	18 / 19.5	8433 4019 10
Straight tools (push-to-start and front lights)								
ETD DL21-01-I06-PS	0.3 - 1.2	2.6 - 10	2200	0.6	1.3	243	18 / 19.5	8433 4010 89
ETD DL21-04-I06-PS	1 - 4	8.8 - 35.4	1600	0.6	1.3	243	18 / 19.5	8433 4014 91
ETD DL21-07-I06-PS	2.2 - 7.5	19.5 - 66	970	0.6	1.3	243	18 / 19.5	8433 4017 69
ETD DL21-10-I06-PS	3 - 10	26.6 - 88.5	720	0.6	1.3	243	18 / 19.5	8433 4019 25
Right angle tools (lever start)								
ETV DL21-04-I06	1 - 4	8.8 - 35.4	1600	0.7	1.5	268	9	8433 4004 47
ETV DL21-04-I06-QC	1 - 4	8.8 - 35.4	1600	0.7	1.5	268	9	8433 4004 73
ETV DL21-04-06	1 - 4	8.8 - 35.4	1600	0.7	1.5	268	9	8433 4004 91
ETV DL21-07-I06	2.2 - 7.5	19.5 - 66	970	0.7	1.5	268	9	8433 4007 66
ETV DL21-07-I06-QC	2.2 - 7.5	19.5 - 66	970	0.7	1.5	268	9	8433 4007 79
ETV DL21-07-06	2.2 - 7.5	19.5 - 66	970	0.7	1.5	268	9	8433 4007 94
ETV DL21-10-I06	3 - 12	26.6 - 106.4	610	0.7	1.5	282	11	8433 4009 34
ETV DL21-10-I06-QC	3 - 12	26.6 - 106.4	610	0.7	1.5	282	11	8433 4009 61
ETV DL21-10-06	3 - 12	26.6 - 106.4	610	0.7	1.5	282	11	8433 4009 77
Pistol grip (lever start)								
ETP DL21-04-I06	1 - 4	8.8 - 35.4	1600	0.6	1.3	235	20	8433 4024 19
ETP DL21-07-I06	2.2 - 7.5	19.5 - 66	970	0.6	1.3	235	20	8433 4027 26
ETP DL21-10-I06	3 - 10	26.6 - 88.5	720	0.6	1.3	235	20	8433 4029 13
Pistol grip (push-to-start and front lights)								
ETP DL21-01-I06-PS-H	0.3 - 1.2	2.6 - 10	2200	0.6	1.3	243	20	8433 4020 77
ETP DL21-04-I06-PS-H	1 - 4	8.8 - 35.4	1600	0.6	1.3	243	20	8433 4024 66
ETP DL21-07-I06-PS-H	2.2 - 7.5	19.5 - 66	970	0.6	1.3	243	20	8433 4027 53
ETP DL21-10-I06-PS-H	3 - 10	26.6 - 88.5	720	0.6	1.3	243	20	8433 4029 28
Fixtured tools (lever start or remote start)								
ETF DL21-01-I06-T25	0.3 - 1.2	2.6 - 10	2200	0.7	1.5	328	18 / 19.5	8433 4040 04
ETF DL21-04-I06-T25	1 - 4	8.8 - 35.4	1600	0.7	1.5	328	18 / 19.5	8433 4042 13
ETF DL21-07-I06-T25	2.2 - 7.5	19.5 - 66	970	0.7	1.5	328	18 / 19.5	8433 4043 22
ETF DL21-10-I06-T25	3 - 10	26.6 - 88.5	720	0.7	1.5	328	18 / 19.5	8433 4044 11

[a] For ETV, CS distance over angle head.

TENSOR SL

Electric screwdrivers

ETD SL

- ETD SL is a very compact screwdriver with excellent power to weight ratio.
- Torque range from 0.3 to 10 Nm.
- Push-to-start function and front lights.
- Small center-to-side distance.
- Ergonomic design.
- Buzzer and additional blue LED for better operator support.

ETV SL

- ETV SL is the most compact transducerised angle screwdriver in the Tensor range.
- Torque range from 0.8 to 20 Nm.
- High durability with spiral angle gears.
- Ergonomic design.
- Buzzer and additional blue LED for better operator support.

ETP SL

- ETP SL is our first push-to-start pistol tool.
- Torque range from 0.3 to 10 Nm.
- Ergonomic, balanced pistol tool.
- Front lights for dark applications.
- Blue light and buzzer.

ETF SL

- ETF SL is the smallest and lightest fixtured tool.
- Torque range from 0.3 to 10 Nm.
- Stroke with 25 mm suspension.
- Small center-to-side distance.

Model	Torque Nm	Torque in lb	Speed r/min	Weight kg	Weight lb	Length mm	CS distance[a] mm	Stroke mm	Ordering No.
Straight tools (push-to-start and front lights)									
ETD SL21-01-I06-PS	0.3 - 1.2	2.7 - 10	2950	0.7	1.6	246	18/19.5	–	8433 2102 92
ETD SL21-04-I06-PS	0.8 - 4	7 - 35	1600	0.7	1.6	246	18/19.5	–	8433 2104 91
ETD SL21-07-I06-PS	1.5 - 7.5	13 - 66	970	0.7	1.6	246	18/19.5	–	8433 2107 69
ETD SL21-10-I06-PS	2.0 - 10	18 - 89	720	0.7	1.6	246	18/19.5	–	8433 2108 25
Right angle tools (lever start)									
ETV SL21-04-I06	0.8 - 4	7 - 35	1600	0.75	1.7	279	9	–	8433 2004 47
ETV SL21-04-I06-QC	0.8 - 4	8 - 35	1600	0.75	1.7	279	9	–	8433 2004 73
ETV SL21-04-06	0.8 - 4	9 - 35	1600	0.75	1.7	279	9	–	8433 2004 91
ETV SL21-07-I06	1.5 - 7.5	13 - 66	970	0.75	1.7	279	9	–	8433 2007 66
ETV SL21-07-I06-QC	1.5 - 7.5	14 - 66	970	0.75	1.7	279	9	–	8433 2007 79
ETV SL21-07-06	1.5 - 7.5	15 - 66	970	0.75	1.7	279	9	–	8433 2007 94
ETV SL21-12-I06	2.5 - 12	22 - 106	610	0.8	1.8	282	11	–	8433 2008 34
ETV SL21-12-I06-QC	2.5 - 12	23 - 106	610	0.8	1.8	282	11	–	8433 2008 61
ETV SL21-12-06	2.5 - 12	24 - 106	610	0.8	1.8	282	11	–	8433 2008 77
ETV SL21-20-10	4 - 20	36 - 180	465	0.95	2.1	285	14	–	8433 2009 55
ETV SL21-20-B10	4 - 20	36 - 180	465	0.95	2.1	285	14	–	8433 2009 60
Pistol grip (push-to-start)									
ETP SL21-01-I06-PS	0.3 - 1.2	2.7 - 10	3000	0.85	1.9	246	20.5	–	8433 2201 16
ETP SL21-04-PS	0.8 - 4	7 - 35	1600	0.85	1.9	246	20.5	–	8433 2204 66
ETP SL21-07-PS	1.5 - 7.5	13 - 66	970	0.85	1.9	246	20.5	–	8433 2207 53
ETP SL21-10-PS	2 - 10	18 - 89	720	0.85	1.9	246	20.5	–	8433 2208 28
Fixtured tools (lever start or remote start)									
ETF SL21-01-I06-T25	0.3 - 1.2	2.7 - 10	3000	0.95	2.1	322	18	25	8433 2404 13
ETF SL21-04-I06-T25	0.8 - 4	7 - 35	1600	0.95	2.1	322	18	25	8433 2404 19
ETF SL21-07-I06-T25	1.5 - 7.5	13 - 66	970	0.95	2.1	322	18	25	8433 2407 26
ETF SL21-10-I06-T25	2 - 10	18 - 89	720	0.95	2.1	322	18	25	8433 2408 13

[a] For ETV, CS distance over angle head.

TENSOR DS

Angle electric nutrunners

ETV DS

The new Tensor DS angle tool series is equipped with spiral gears in the angle heads to improve contact ratio between the gears: This allows for smoother tightening and improved accuracy throughout service life of the tool. The new molded ergonomic motor sleeve improves grip and comfort for the operator.

- ETV DS right angle tools are ideal for hand-held operations.
- Torque range from 2 to 4000 Nm.
- Complete range of Flush Socket and Hold & Drive tools.
- Ball retainers for fast and easy socket changes.

Model	Square drive in	Torque Nm	Torque ft lb	Speed r/min	Weight kg	Weight lb	Length mm	CS distance mm	Ordering No.
ETV DS42									
ETV DS42-05-06	1/4	1.8 - 6	1.4 - 4.4	1488	1.2	2.6	381	11	8433 1705 31
ETV DS42-08-06	1/4	2.4 - 8	1.8 - 5.9	1105	1.2	2.6	381	11	8433 1706 10
ETV DS42-10-06	1/4	3.6 - 12	2.7 - 8.8	762	1.3	2.9	381	11	8433 1706 14
ETV DS42-20-10	3/8	6 - 20	4.4 - 14	401	1.3	2.9	381	13.5	8433 1706 49
ETV DS42 Ball retainer									
ETV DS42-10-B10	3/8	4.5 - 12	3.4 - 8.8	762	1.3	2.9	381	13.5	8433 1706 31
ETV DS42-20-B10	3/8	6 - 20	4.5 - 14	401	1.3	2.9	381	13.5	8433 1706 51
ETV DS72									
ETV DS72-15-10	3/8	5 - 17	3.7 - 12	1525	1.4	3.1	412	13.5	8433 1720 10
ETV DS72-28-10	3/8	8.4 - 28	6.3 - 20	1171	1.4	3.1	412	13.5	8433 1720 28
ETV DS72-30-10	3/8	10 - 35	7.4 - 25	800	1.4	3.1	412	13.5	8433 1721 42
ETV DS72-40-10	3/8	12 - 40	8.9 - 29	800	1.6	3.5	434	18	8433 1721 94
ETV DS72-50-10	3/8	17 - 55	13 - 40	480	1.6	3.5	434	18	8433 1722 58
ETV DS72-70-13	1/2	24 - 80	18 - 59	348	2.1	4.6	461	20	8433 1723 16
ETV DS72-100-13	1/2	33 - 110	25 - 81	229	2.3	5.1	482	20	8433 1723 70
ETV DS72-160-13	1/2	48 - 160	36 - 118	152	2.8	6.2	525	25.5	8433 1723 98
ETV DS72-180-13	1/2	60 - 180	45 - 133	123	2.8	6.2	525	25.5	8433 1724 15
ETV DS72-200-20	3/4	63 - 210	47 - 155	123	3.0	6.6	525	27	8433 1724 40
ETV DS72 Flush Socket									
ETV DS72-30-FS	-	10 - 35	7.4 - 25	800	1.4	3.1	412	13.5	8433 1721 65
ETV DS72-50-FS	-	17 - 55	13 - 40	480	1.6	3.5	434	18	8433 1722 75
ETV DS72-70-FS	-	24 - 80	18 - 59	345	2.1	4.6	461	20	8433 1723 26
ETV DS72 Hold & Drive									
ETV DS72-50-HAD	-	17 - 55	13 - 40	480	3.0	6.6	504	26	8433 1722 60
ETV DS72-70-HAD	-	24 - 80	18 - 59	348	3.1	6.8	479	26	8433 1723 30
ETV DS72-100-HAD	-	33 - 110	25 - 81	229	3.2	7.1	525	26	8433 1723 73
ETV DS72-160-HAD	-	45 - 160	34 - 118	152	3.3	7.3	525	26	8433 1724 02
ETV DS72-200-HAD	-	60 - 200	45 - 148	123	3.5	7.7	525	26	8433 1724 45
ETV DS72 Ball retainer									
ETV DS72-15-B10	3/8	5 - 17	3.7 - 12	1525	1.4	3.1	412	13.5	8433 1720 20
ETV DS72-30-B10	3/8	10 - 35	7.4 - 25	800	1.4	3.1	412	13.5	8433 1721 54
ETV DS72-40-B10	3/8	12 - 40	8.9 - 29	800	1.6	3.5	434	18	8433 1721 99
ETV DS72-50-B10	3/8	17 - 55	13 - 40	480	1.6	3.5	434	18	8433 1722 63
ETV DS72-70-B13	1/2	24 - 80	18 - 59	348	2.1	4.6	461	20	8433 1723 21
ETV DS72-100-B13	1/2	33 - 110	25 - 81	240	2.3	5.1	482	20	8433 1723 68
ETV DS72-160-B13	1/2	48 - 160	36 - 118	152	2.8	6.2	525	25.5	8433 1724 12
ETV DS72-180-B13	1/2	60 - 180	45 - 133	123	2.8	6.2	525	25.5	8433 1724 20
ETV DS92									
ETV DS92-100-13	1/2	40 - 100	29.6 - 74	642	3.3	7.3	534	20	8433 1750 21
ETV DS92-120-13	1/2	36 - 120	26.7 - 88	480	3.5	7.7	560	23	8433 1750 32
ETV DS92-180-13	1/2	72 - 180	53.3 - 113	395	3.8	8.4	578	25.5	8433 1750 68
ETV DS92-270-20	3/4	108 - 270	80 - 199	240	7.0	15.4	661	33.5	8433 1751 38
ETV DS92-370-20	3/4	115 - 370	85.1 - 273	152	7.1	15.7	661	33.5	8433 1751 86
ETV DS92-450-20	3/4	115 - 450	85.1 - 333	131	11.6	25.6	702	54	8433 1752 04
ETV DS92-600-25	1	150 - 600	111 - 444	112	11.6	25.6	702	54	8433 1752 63
ETV DS92-600-20TM	3/4	150 - 600	111 - 444	97	9.7	21.4	603	26.3	8433 1752 40
ETV DS92-1000-25TM	1 1/2	250 - 1000	185 - 740	60	12.0	26.5	666	32	8433 1752 90
ETV DS92-2000-38TM	1 1/2	500 - 2000	370 - 1480	30	17.0	37.5	706	63.5	8433 1752 96
ETV DS92-4000-38TM	1 1/2	1000 - 4000	740 - 2960	14	21.0	46.3	615	71	8433 1753 25
ETV DS92 Flush Socket									
ETV DS92-180-FS	-	72 - 180	53.3 - 133	385	4.1	9.0	577	26	8433 1750 73
ETV DS92-270-FS	-	108 - 270	80 - 199	235	7.0	15.4	661	34	8433 1751 46

TENSOR DS

Straight electric nutrunners

ETD DS

- ETD DS inline tools. The low torque series is ideal for hand-held bench assembly. The high torque tools are well suited for fixtured applications.
- Torque range from 1 to 4000 Nm.
- Telescopic spindles for fixtured applications.
- Female hex drives for bits.
- Swivelling front parts for low reaction force.

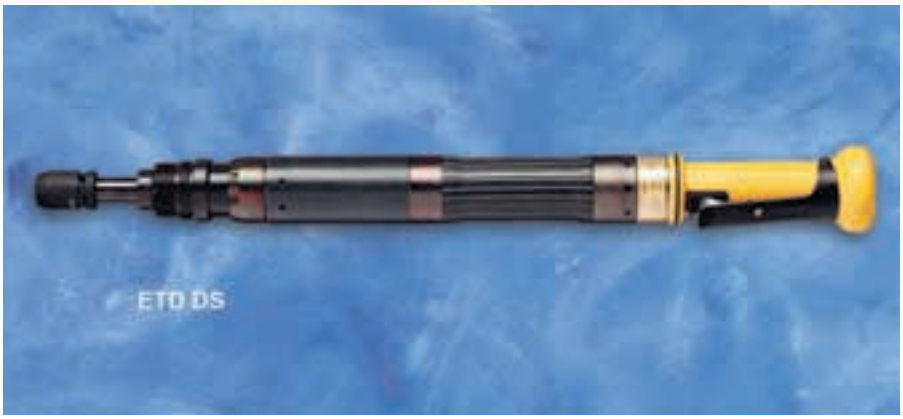

Model	Square drive in	Torque Nm	Torque ft lb	Speed r/min	Weight kg	Weight lb	Length mm	CS distance mm	Spline/ Mounting	Ordering No.
ETD DS4										
ETD DS4-05-10S	3/8	2 - 5	1.5 - 3.6	1315	1.1	2.5	380	28	– / 1	8433 0710 29
ETD DS4-10-10S	3/8	4 - 14	3 - 10	620	1.1	2.5	380	28	– / 1	8433 0710 52
ETD DS4 Telescopic										
ETD DS4-05-10ST	3/8	2 - 5	1.5 - 3.6	1315	1.3	2.9	418	28	2 / 2	8433 0710 37
ETD DS4-10-10ST	3/8	4 - 14	3 - 10	620	1.3	2.9	418	28	2 / 2	8433 0710 73
ETD DS4 Female Hex										
ETD DS4-02-I06S	1/4	1.0 - 2.5	0.7 - 1.8	2942	1.1	2.5	371	21.5	– / 1	8433 0710 22
ETD DS4-05-I06S	1/4	2 - 5	1.5 - 3.6	1310	1.1	2.5	371	28	– / 1	8433 0710 26
ETD DS7										
ETD DS7-20-10S	3/8	6 - 20	4.4 - 14.5	1240	1.4	3.1	411	28	– / 1	8433 0730 23
ETD DS7-30-10S	3/8	10 - 35	7.3 - 25	745	1.4	3.1	411	28	– / 1	8433 0730 88
ETD DS7-50-13S	1/2	17 - 55	12 - 40	540	1.9	4.2	456	28	2 / 2	8433 0731 12
ETD DS7-70-13S	1/2	21 - 70	15 - 51	370	2.2	4.9	477	28	2 / 2	8433 0731 31
ETD DS7-90-13S	1/2	28 - 95	21 - 69	275	2.2	4.9	477	28	2 / 2	8433 0731 45
ETD DS7-120-13S	1/2	38 - 125	28 - 91	225	2.2	4.9	477	28	2 / 2	8433 0731 84
ETD DS7 Telescopic										
ETD DS7-20-10ST	3/8	6 - 20	4.4 - 14.5	1240	1.5	3.3	449	28	2 / 2	8433 0730 44
ETD DS7-30-10ST	3/8	10 - 35	7.3 - 25	745	1.5	3.3	449	28	2 / 2	8433 0731 05
ETD DS7-50-13ST	1/2	17 - 55	12 - 40	540	2.1	4.7	483	28	3 / 5	8433 0731 24
ETD DS7-70-13ST	1/2	21 - 70	15 - 51	370	2.4	5.4	504	28	3 / 5	8433 0731 40
ETD DS7-90-13ST	1/2	28 - 95	21 - 69	275	2.4	5.4	504	28	3 / 5	8433 0731 52
ETD DS7-120-13ST	1/2	38 - 125	28 - 91	225	2.4	5.4	504	28	3 / 5	8433 0731 96
ETD DS9										
ETD DS9-100-13S	1/2	40 - 100	29 - 73	715	3.0	6.7	529	32	2 / 2	8433 0756 42
ETD DS9-150-13S	1/2	60 - 150	44 - 110	455	3.2	7.1	544	32	2 / 2	8433 0757 54
ETD DS9-200-13S	1/2	80 - 200	58 - 146	340	3.2	7.1	544	32	2 / 2	8433 0758 71
ETD DS9-450-20S	3/4	115 - 450	85 - 328	125	7.4	16.3	639	40.5	6 / 8	8433 0760 71
ETD DS9-1000-25S	1	250 - 1000	184 - 730	68	12.3	27.1	769	47	7 / 11	8433 0763 60
ETD DS9-1200-25S	1	300 - 1200	220 - 880	55	12.3	27.1	769	47	7 / 11	8433 0763 80
ETD DS9-1500-38S	1 1/2	375 - 1500	280 - 1100	42	16.8	37	725	68	8 / 12	8433 0763 91
ETD DS9-2000-38S	1 1/2	600 - 2000	440 - 1475	34	20.5	45.2	725	68	8 / 12	8433 0764 05
ETD DS9-3000-38S	1 1/2	750 - 3000	550 - 2200	21	21.7	47.8	809	68	8 / 12	8433 0764 23
ETD DS9-4000-38S	1 1/2	1000 - 4000	730 - 2950	17	21.7	47.8	809	68	8 / 12	8433 0764 37
ETD DS9 Telescopic										
ETD DS9-100-13ST	1/2	40 - 100	29 - 73	715	3.2	7.1	557	32	3 / 5	8433 0756 92
ETD DS9-150-13ST	1/2	60 - 150	44 - 110	455	3.4	7.6	572	32	3 / 5	8433 0758 03
ETD DS9-200-13ST	1/2	80 - 200	58 - 146	340	3.4	7.6	572	32	3 / 5	8433 0759 11
ETD DS9-270-20ST	3/4	108 - 270	79 - 197	225	6.0	13.4	653	36	6 / 8	8433 0760 55
ETD DS9-450-20ST	3/4	115 - 450	85 - 328	125	7.6	17	689	40.5	6 / 8	8433 0760 88
ETD DS9-600-20ST	3/4	150 - 600	110 - 438	110	7.6	17	689	40.5	6 / 8	8433 0761 35
ETD DS9-1000-25ST	1	250 - 1000	184 - 730	68	12.5	27.6	824	47	7 / 11	8433 0763 63
ETD DS9-1200-25ST	1	300 - 1200	220 - 880	55	12.5	27.6	824	47	7 / 11	8433 0763 83
ETD DS9-1500-38ST	1 1/2	375 - 1500	280 - 1100	42	17	37.5	824	68	8 / 12	8433 0763 93
ETD DS9-2000-38ST	1 1/2	600 - 2000	440 - 1475	34	21	46.3	824	68	8 / 12	8433 0764 20
ETD DS9-3000-38ST	1 1/2	750 - 3000	550 - 2200	21	21.9	48.3	904	68	8 / 12	8433 0764 25
ETD DS9-4000-38ST	1 1/2	1000 - 4000	730 - 2950	17	21.9	48.3	904	68	8 / 12	8433 0764 40
ETD DS9 Swivelling										
ETD DS9-450-20SSW	3/4	180 - 450	79 - 197	125	7.8	17.4	639	40.5	6 / 8	8433 0760 94
ETD DS9-600-20SSW	3/4	240 - 600	175 - 438	110	7.8	17.4	639	40.5	6 / 8	8433 0761 59

TENSOR DS

Pistol grip electric nutrunners

ETP DS

- ETP DS pistol grip tool for both hand-held and fixtured applications.
- Torque range from 2 to 4000 Nm.
- Telescopic spindles for fixtured applications.
- Swivelling front parts for low reaction force.
- Female hex drives for bits.
- Swivelling tools are equipped with non-reversible start button, for operator safety.
- New models of compact and light swivelling pistols for high torque tightening. Weigth reductions with up to 50% for a true hand-held tool.

Model	Square drive in	Torque Nm	Torque ft lb	Speed r/min	Weight kg	Weight lb	Length mm	CS distance mm	Spline/ Mounting	Ordering No.
ETP DS4										
ETP DS4-05-06S	1/4	2 - 5	1.5 - 3.6	1310	1.1	2.5	193	21.5	– / –	8433 0708 76
ETP DS4-10-06S	1/4	3.5 - 12	2.5 - 8.8	660	1.1	2.5	193	21.5	– / –	8433 0708 92
ETP DS4-10-10S	3/8	3.5 - 12	2.5 - 8.8	660	1.1	2.5	193	21.5	– / –	8433 0709 06
ETP DS4 Female Hex										
ETP DS4-02-I06S	1/4	1.0 - 2.5	0.7 - 1.8	2942	1.1	2.5	201	21.5	– / –	8433 0708 57
ETP DS42-02-I06	1/4	1.0 - 2.5	0.7 - 1.8	2950	0.9	2.0	188	21.3	– / –	8433 0708 40
ETP DS4-05-I06S	1/4	2 - 5	1.5 - 3.6	1310	1.1	2.5	201	21.5	– / –	8433 0708 61
ETP DS42-05-I06	1/4	2 - 5	1.5 - 3.6	1770	0.9	2.0	188	21.3	– / –	8433 0708 69
ETP DS4-07-I06S	1/4	2.1 - 7	1.5 - 5.1	905	1.1	2.5	201	21.5	– / –	8433 0708 80
ETP DS4-10-I06S	1/4	3.5 - 12	2.5 - 8.8	660	1.1	2.5	201	21.5	– / –	8433 0708 83
ETP DS42-10-I06	1/4	3.5 - 12	2.5 - 8.8	905	1.0	2.2	188	21.3	– / –	8433 0708 87
ETP DS7										
ETP DS7-20-10S	3/8	6 - 20	4.4 - 14.5	1240	1.6	3.6	273	22	– / 1	8433 0726 36
ETP DS7-30-10S	3/8	10 - 35	7.3 - 25	750	1.6	3.6	273	22	– / 1	8433 0726 53
ETP DS7-50-13S	1/2	17 - 55	12 - 40	540	1.9	4.2	318	21.5	2 / 2	8433 0726 87
ETP DS7-70-13S	1/2	21 - 70	15 - 51	370	2.1	4.7	340	21.5	2 / 2	8433 0727 01
ETP DS7-90-13S	1/2	28 - 95	21 - 69	275	2.1	4.7	340	21.5	2 / 2	8433 0727 19
ETP DS7-120-13S	1/2	38 - 125	28 - 91	220	2.1	4.7	340	21.5	2 / 2	8433 0727 47
ETP DS7 Telescopic										
ETP DS7-70-13ST	1/2	21 - 70	15 - 51	370	2.2	4.9	367	22.5	3 / 5	8433 0727 05
ETP DS7 Swivelling[a]										
ETP DS7-70-13SSW	1/2	21 - 70	15 - 51	370	2.2	4.9	339	29.5	2 / 4	8433 0727 09
ETP DS7-90-13SSW	1/2	28 - 95	21 - 69	275	2.2	4.9	339	29.5	2 / 4	8433 0727 28
ETP DS7-120-13SSW	1/2	38 - 125	28 - 91	220	2.2	4.9	339	29.5	2 / 4	8433 0727 84
ETP DS9										
ETP DS9-100-13S	1/2	40 - 100	29 - 73	790	3.8	8.5	378	32	2 / 2	8433 0765 39
ETP DS9-150-13S	1/2	60 - 150	44 - 110	510	3.8	8.5	392	32	2 / 2	8433 0765 58
ETP DS9-200-13S	1/2	80 - 200	58 - 146	375	3.8	8.5	392	32	2 / 2	8433 0766 05
ETP DS9-270-20S	3/4	108 - 270	79 - 197	250	5.8	12.9	451	36	6 / 8	8433 0766 49
ETP DS9-450-20S	3/4	115 - 450	85 - 328	140	7.4	16.5	487	40.5	6 / 8	8433 0767 52
ETP DS9-600-20S	3/4	150 - 600	110 - 438	120	7.4	16.5	487	40.5	6 / 8	8433 0768 08
ETP DS9-1000-25S	1	250 - 1000	184 - 730	68	12.1	26.7	620	47	7 / 11	8433 0768 66
ETP DS9-1200-25S	1	300 - 1200	220 - 880	55	12.1	26.7	620	47	7 / 11	8433 0768 83
ETP DS9-1500-38S	1 1/2	375 - 1500	280 - 1100	42	16.8	37	574	68	8 / 12	8433 0768 94
ETP DS9-2000-38S	1 1/2	500 - 2000	440 - 1475	34	16.8	37	574	68	8 / 12	8433 0769 10
ETP DS9-3000-38S	1 1/2	750 - 3000	550 - 2200	21	21.7	47.8	654	68	8 / 12	8433 0769 30
ETP DS9-4000-38S	1 1/2	1000 - 4000	730 - 2950	17	21.7	47.8	654	68	8 / 12	8433 0769 50
ETP DS9 Telescopic										
ETP DS9-1000-25ST	1	250 - 1000	184 - 730	68	12.3	27.1	672	47	7 / 11	8433 0768 79
ETP DS9-1200-25ST	1	300 - 1200	220 - 880	55	12.3	27.1	672	47	7 / 11	8433 0768 92
ETP DS9-1500-38ST	1 1/2	375 - 1500	280 - 1100	42	17	37.5	672	68	8 / 12	8433 0768 98
ETP DS9-2000-38ST	1 1/2	500 - 2000	440 - 1475	34	17	37.5	672	68	8 / 12	8433 0769 20
ETP DS9-3000-38ST	1 1/2	750 - 3000	550 - 2200	21	21.9	48.3	753	68	8 / 12	8433 0769 33
ETP DS9-4000-38ST	1 1/2	1000 - 4000	730 - 2950	17	21.9	48.3	753	68	8 / 12	8433 0769 60

[a] Non-reversible.

Continued....

TENSOR DS

Pistol grip electric nutrunners

Model	Square drive in	Torque Nm	Torque ft lb	Speed r/min	Weight kg	Weight lb	Length mm	CS distance mm	Spline/ Mounting	Ordering No.
ETP DS9 Swivelling[a]										
ETP DS9-100-13SSW	1/2	40 - 100	29 - 73	790	3.9	8.7	394	32	2 / 4	8433 0765 41
ETP DS9-150-13SSW	1/2	60 - 150	44 - 110	510	3.9	8.7	394	32	2 / 4	8433 0765 69
ETP DS9-200-13SSW	1/2	80 - 200	58 - 146	375	3.9	8.7	394	32	2 / 4	8433 0766 12
ETP DS9-270-20SSW	3/4	108 - 270	79 - 197	250	5.9	13.1	451	36	6 / 8	8433 0766 54
ETP DS9-350-20SSW[b]	3/4	100 - 370	75 - 270	180	5.2	11.5	387	35	4	8433 0766 56
ETP DS9-450-20SSW	3/4	115 - 450	85 - 332	140	7.5	16.7	487	40.5	6 / 8	8433 0767 61
ETP DS9-500-20SSW[b]	3/4	140 - 530	105 - 390	125	5,2	11,5	387	35	4	8433 0767 71
ETP DS9-600-20SSW	3/4	150 - 600	110 - 442	120	7.5	16.7	487	40.5	6 / 8	8433 0768 20
ETP DS9-750-25SSW[b]	1	220 - 750	162 - 553	84	5.5	12.1	428	47	5	8433 0768 24
ETP DS9-1000-25SSW	1	250 - 1000	184 - 730	68	12.1	26.7	620	47	7 / 11	8433 0768 76
ETP DS9-1200-25SSW	1	300 - 1200	220 - 880	55	12.1	26.7	620	47	7 / 11	8433 0768 85
ETP DS9-1500-25SSW[b]	1	375 - 1500	280 - 1100	45	8,5	18.8	450	46	9	8433 9768 99
ETP DS9-1500-38SSW	1 1/2	375 - 1500	280 - 1100	42	16.8	37	574	68	8 / 12	8433 0768 96
ETP DS9-2000-38SSW	1 1/2	500 - 2000	440 - 1475	34	16.8	37	574	68	8 / 12	8433 0769 15

[a] Non-reversible.
[b] For reaction bars for this tool see page 67.

TENSOR DS

Crowfoot electric nutrunners

In-Line crowfoot tools

DIMENSIONS

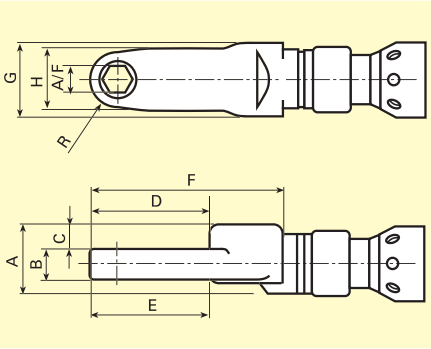

Model	Torque Nm	Torque ft lb	Speed r/min	Weight kg	Weight lb	Length mm	A/F mm	A mm	B mm	C mm	D mm	E mm	F mm	G mm	H mm	R mm	Ordering No.
ETC DS7																	
ETC DS7-25-13-LI3	6 - 28	4.4 - 20.7	622	1.9	4.2	507	13	34	15	13	59	71	94	35	30	13	8433 0701 90

Offset crowfoot tools

DIMENSIONS

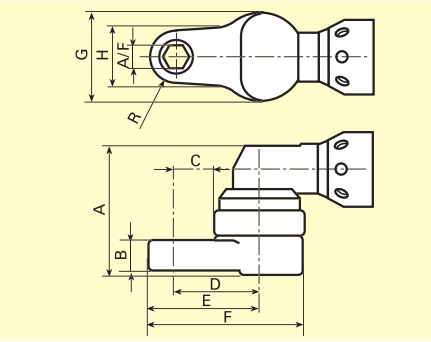

Model	Torque Nm	Torque ft lb	Speed r/min	Weight kg	Weight lb	Length mm	A/F mm	A mm	B mm	C mm	D mm	E mm	F mm	G mm	H mm	R mm	Ordering No.
ETC DS7																	
ETC DS7-15-10-LO5	3.5 - 18	2.6 - 13.3	1164	1.7	3.7	474	10	60	15	48	66	76	91	37	22	10	8433 1701 12
ETC DS7-25-13-LO5	5.6 - 28	4.2 - 20.7	796	2.0	4.4	514	13	68	15	62	84	97	118	44	30	13	8433 1701 29
ETC DS7-40-13-LO3	8.8 - 44	6.5 - 32.5	478	2.2	4.8	478	13	68	18	25	47	62	82	44	31	14.5	8433 1701 34
ETC DS7-40-13-LO5	8.8 - 44	6.5 - 32.5	478	2.2	4.8	425	13	69	18	72	94	108	129	44	31	14.5	8433 1701 38
ETC DS7-60-17-LO3	13 - 65	9.6 - 48.1	346	2.7	5.9	507	17	77	24	29	51	66	89	48	30	15	8433 1701 46
ETC DS7-80-21-LO3	18 - 90	13.3 - 66.6	236	3.3	7.3	585	21	90	20	35	66	86	112	63	40	20	8433 1701 60
ETC DS7-80-21-LO5	18 - 90	13.3 - 66.6	236	4.1	9.0	651	21	92	20	101	132	152	178	63	40	20	8433 1701 65
ETC DS7 Extra heavy duty																	
ETC DS7-40-13-AO3	8 - 40	6 - 29	480	2.3	5.0	486	13	60.3	19	33	53	69	86	40	17	16	8433 1702 15
ETC DS7-70-17-AO3	14 - 70	11 - 51	345	2.9	6.4	528	17	66.5	19	45	68	87	107	45	21	19.5	8433 1702 32
ETC DS9																	
ETC DS9-200-21-LO3	43 - 215	31.8 - 159.1	174	10.0	22.0	718	21	146	40	33	70	91	125	77	42	21	8433 1701 80

TENSOR DS

Tube nut electric nutrunners

In-Line tube nut tools

DIMENSIONS

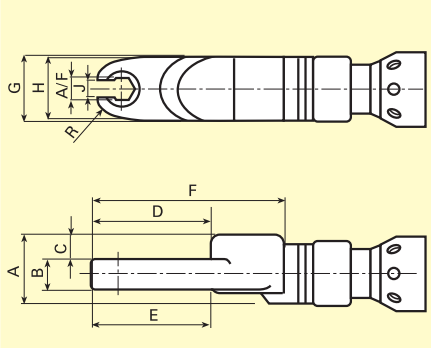

Model	Torque Nm	Torque ft lb	Speed r/min	Weight kg	Weight lb	Length mm	A/F mm	A mm	B mm	C mm	D mm	E mm	F mm	G mm	H mm	J mm	R mm	Ordering No.
ETO DS7																		
ETO DS7-15-10-LI3	3 - 15	2.2 - 11.1	1046	1.7	3.7	483	10	32	12	11	39	26	68	34	32	8	14	8433 0703 10
ETO DS7-18-13-LI3	3.6 - 18	2.7 - 13.3	743	1.7	3.7	499	13	34	11	15	49	32	84	35	38	8.5	16	8433 0703 15
ETO DS7-30-13-LI3	6.6 - 33	4.7 - 24.3	453	2.4	5.2	525	13	43	18	14	47	31	83	38	40	10.4	25	8433 0703 21
ETO DS7-35-13-LI3	7 - 35	5.2 - 25.9	438	2.6	5.7	569	13	46	11	21	70	48	113	45	55	12.5	32	8433 0703 25
ETO DS7-50-17-LI3	11 - 55	8.2 - 40.7	290	3.0	6.6	628	17	46	12	20	81	39	124	45	59	16	32	8433 0703 35
ETO DS7-80-19-LI3	16 - 80	11.9 - 59.2	226	3.5	7.7	629	19	46	18	17	74	52	137	64	59	17	32	8433 0703 40

Offset tube nut tools

DIMENSIONS

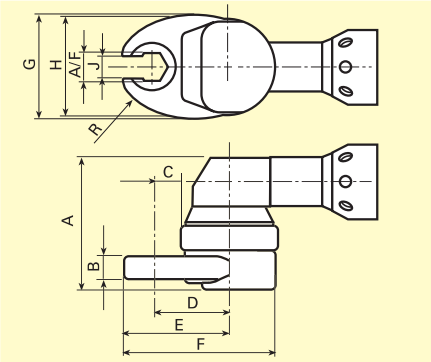

Model	Torque Nm	Torque ft lb	Speed r/min	Weight kg	Weight lb	Length mm	A/F mm	A mm	B mm	C mm	D mm	E mm	F mm	G mm	H mm	J mm	R mm	Ordering No.
ETO DS4																		
ETO DS4-08-8-LO3	1.7 - 8.5	1.3 - 6.3	584	1.5	3.3	397	8	59	11	4	22	30	45	37	29	6	10	8433 1703 50
ETO DS7																		
ETO DS7-10-10-LO3	2.4 - 12	1.8 - 8.9	1164	1.6	3.5	434	10	59	10	7	25	35	50	37	31	7	11.5	8433 1703 60
ETO DS7-18-13-LO3	3.6 - 18	2.7 - 13.3	796	1.8	3.9	441	13	61	11	8	30	42	63	44	38	8	15	8433 1703 68
ETO DS7-25-13-LO3	5.6 - 28	4.2 - 20.7	796	1.9	4.2	469	13	65	11	13	37	52	75	48	50	11	31	8433 1703 75
ETO DS7-50-17-LO3	11 - 55	8.2 - 40.7	346	2.8	6.2	510	17	76	12	18	49	69	97	63	59	16	32	8433 1703 80
ETO DS7-80-19-LO3	16 - 80	11.9 - 59.2	236	3.7	8.1	568	19	91	18	18	49	63	97	63	59	17	32	8433 1703 85
ETO DS7-100-24-LO3	22 - 110	16.3 - 81.4	198	4.3	9.5	584	24	92	20	23	60	85	119	74	77	21	33	8433 1703 90

TENSOR S

Angle electric nutrunners

ETV S

Our new Tensor S 42/72/92 angle tool series is now equipped with spiral gears in the angle heads which have already been used successfully in other Atlas Copco tools. The new spiral gears improve the contact ratio between the gears, making the gears run more smoothly. The new molded ergonomic motor sleeve improves grip and comfort for the operator.

- ETV S right angle tools are ideal for hand-held operations.
- Torque range from 1 to 2000 Nm (higher torque models available on request).
- Complete range of Flush Socket and Hold & Drive tools.

- Ball retainers for fast and easy socket changes.
- Female hex drive and quick chucks for bits.

Model	Square drive in	Torque Nm	Torque ft lb	Speed r/min	Weight kg	Weight lb	Length mm	CS distance mm	Ordering No.
ETV S42									
ETV S42-05-06	1/4	1 - 6	0.7 - 3.6	1232	1.5	3.3	381	11	8433 1236 12
ETV S42-05-10	3/8	1 - 6	0.7 - 3.6	1232	1.5	3.3	381	13.5	8433 1236 26
ETV S42-10-06	1/4	3 - 15	2.2 - 11	798	1.5	3.3	381	11	8433 1236 35
ETV S42-10-10	3/8	3 - 15	2.2 - 11	798	1.5	3.3	381	13.5	8433 1236 51
ETV S42-20-10	3/8	4 - 25	2.9 - 18.3	447	1.5	3.3	382	13.5	8433 1236 91
ETV S42-30-10	3/8	6 - 35	4.4 - 27.7	268	1.6	3.5	384	15.5	8433 1237 04
ETV S42 Ball Retainer									
ETV S42-10-B10	3/8	3 - 15	2.2 - 11	798	1.5	3.3	381	11	8433 1236 62
ETV S42-20-B10	3/8	4 - 25	2.9 - 18.3	447	1.5	3.3	382	13.5	8433 1236 95
ETV S72									
ETV S72-28-10	3/8	5 - 29	4 - 21	1305	1.6	3.5	413	13.5	8433 1245 20
ETV S72-30-10	3/8	6 - 35	5 - 25	893	1.6	3.5	415	15.5	8433 1247 33
ETV S72-40-10	3/8	8 - 40	6 - 29	887	1.7	3.7	435	18	8433 1250 00
ETV S72-50-10	3/8	10 - 55	7 - 40	533	1.9	4.2	435	18	8433 1252 87
ETV S72-70-13	1/2	14 - 80	10 - 58	384	2.2	4.8	461	20	8433 1273 09
ETV S72-100-13	1/2	20 - 100	15 - 80	307	2.5	5.5	489	22.5	8433 1280 00
ETV S72-150-13	1/2	30 - 160	22 -117.3	190	2.9	6.4	525	25.5	8433 1288 67
ETV S72-180-13	1/2	40 - 180	29 - 132	142	3.0	6.6	525	25.5	8433 1291 17
ETV S72-200-20	3/4	40 - 210	29 - 154	142	3.2	10.4	527	27	8433 1291 35
ETV S72 Ball Retainer									
ETV S72-28-B10	3/8	5 - 29	4 - 21	1300	1.6	3.5	413	13.5	8433 1245 23
ETV S72-30-B10	3/8	6 - 35	5 - 25	893	1.6	3.5	415	15.5	8433 1247 35
ETV S72-40-B10	3/8	8 - 40	6 - 29	887	1.7	3.7	435	18	8433 1250 42
ETV S72-50-B10	3/8	10 - 55	7 - 40	533	1.9	4.2	435	18	8433 1252 62
ETV S72-70-B13	1/2	14 - 80	10 - 58	384	2.2	4.8	461	20	8433 1273 44
ETV S72-100-B13	1/2	20 - 110	15 - 80	307	2.5	5.5	489	22.5	8433 1280 31
ETV S72-150-B13	1/2	30 - 160	22 -117.3	190	2.9	6.4	525	25.5	8433 1288 46
ETV S72-180-B13	1/2	40 - 180	29 - 132	142	3.0	6.6	525	25.5	8433 1291 44
ETV S7 Flush Socket									
ETV S7-25-CTADS-FS13	-	6 - 25	5 - 18	910	1.6	3.5	413	13.5	8433 0244 12
ETV S7-28-FS5/16	-	5 - 29	4 - 21	1300	1.6	3.5	413	13.5	8433 0244 21
ETV S7-30-CTADS-FS13	-	6 - 35	5 - 25	910	1.6	3.5	413	13.5	8433 0247 96
ETV S7-40-CTADS-FS13	-	8 - 40	6 - 29	910	1.8	4.0	435	18	8433 0251 51
ETV S7-50-CTADS-FS13	-	10 - 55	7 - 40	545	1.8	4.0	435	18	8433 0254 14
ETV S7-70-CTADS-FS	-	14 - 80	10 - 58	390	2.6	5.7	461	20.3	8433 0275 15
ETV S7-100-CTADS-FS	-	20 - 110	15 - 80	300	3.0	6.7	482	20.3	8433 0282 49
ETV S7-150-CTADS-FS	-	30 - 150	22 - 110	185	3.3	7.3	525	26	8433 0289 04
ETV S7-200-CTADS-FS	-	40 - 200	29 - 146	130	3.3	7.3	525	26	8433 0291 79

Continued....

TENSOR S

Angle electric nutrunners

Model	Square drive in	Torque Nm	Torque ft lb	Speed r/min	Weight kg	Weight lb	Length mm	CS distance mm	Ordering No.
ETV S7 Hold & Drive									
ETV S7-28-HAD-SH	-	5 - 29	4 - 21	1300	2.1	4.7	436	18.3	8433 0245 74
ETV S7-30-HAD-SH	-	6 - 35	5 - 25	910	2.1	4.7	436	18.3	8433 0247 90
ETV S7-40-HAD-SH	-	8 - 40	6 - 29	910	2.1	4.7	436	18.3	8433 0251 64
ETV S7-50-HAD-SH	-	10 - 55	7 - 40	545	2.1	4.7	436	18.3	8433 0253 74
ETV S7-70-CTADS-HAD	-	14 - 80	10 - 58	320	3.3	7.3	504	26	8433 0274 15
ETV S7-100-CTADS-HAD	-	20 - 110	15 - 80	225	3.7	8.2	525	26	8433 0280 97
ETV S7-150-CTADS-HAD	-	30 - 150	22 - 110	185	3.5	7.7	525	26	8433 0288 93
ETV S7-200-CTADS-HAD	-	40 - 200	29 - 146	130	3.5	8.4	525	26	8433 0292 27
ETV S92									
ETV S92-50-13	1/2	15 - 55	10.8 - 36	1147	4.2	9.2	552	20	8433 1349 47
ETV S92-70-13	1/2	30 - 80	22 - 58	966	4.3	9.4	552	20	8433 1350 03
ETV S92-100-13	1/2	40 - 110	30 - 73	746	4.4	9.7	561	22.5	8433 1350 22
ETV S92-180-13	1/2	45 - 180	33 - 132	455	4.5	9.9	595	25.5	8433 1350 85
ETV S92-200-20	3/4	40 - 210	29 - 154	455	4.7	7.1	597	27	8433 1351 31
ETV S92-270-20	3/4	65 - 270	47 - 198	267	7.4	16.3	661	33	8433 1352 39
ETV S92-370-20	3/4	90 - 370	66 - 270	170	7.5	16.5	661	33	8433 1352 74
ETV S92-450-20	3/4	135 - 450	97 - 324	146	10.0	22	702	54	8433 1353 15
ETV S92-600-25	1	150 - 600	110 - 432	124	10.1	22.2	702	54	8433 1353 81
ETV S9 Flush Socket									
ETV S9-80-CTADS-FS	-	30 - 80	22 - 58	950	4.7	10.3	552	20.3	8433 0350 09
ETV S9-180-CTADS-FS	-	45 - 180	33 - 132	450	4.7	10.3	595	26	8433 0350 91
ETV S9-270-CTADS-FS	-	65 - 270	47 - 198	250	7.4	16.3	661	34.2	8433 0352 45
ETV S9-370-CTADS-FS	-	90 - 370	66 - 270	160	7.5	16.5	661	34.2	8433 0352 78
ETV S9-600-FS	-	150 - 600	110 - 432	130	15.6	34.3	701	53	8433 0353 92
ETV S9 Hold & Drive									
ETV S9-100-CTADS-HAD	-	40 - 100	30 - 73	800	4.9	10.8	595	26	8433 0350 28
ETV S9-180-CTADS-HAD	-	45 - 180	33 - 132	450	5.0	11.0	595	26	8433 0351 01
ETV S9-270-HAD	-	65 - 270	47 - 198	250	8.2	18	661	34.3	8433 0352 46
ETV S9-370-HAD	-	90 - 370	66 - 270	160	8.3	18.3	661	34.3	8433 0352 85
ETV S9 Torque Multiplier									
ETV S9-600-20CTADS-TM	3/4	150 - 600	110 - 440	94	9.7	21.4	603	26.3	8433 0353 32
ETV S9-1000-25CTADS-TM	1	250 - 1000	184 - 730	54	12	26.5	666	32	8433 0354 00
ETV S9-2000-38CTADS-TM	1 1/2	500 - 2000	370 - 1475	38	17	37.5	706	80	8433 0354 24

TENSOR S

Straight electric nutrunners

ETD S

- ETD S inline tools. The low torque series is ideal for hand-held bench assembly. The high torque tools are excellent for fixtured applications.
- Torque range from 1 to 4000 Nm.
- Telescopic spindles for fixtured applications.
- Female hex drives for bits.

Model	Square drive in	Torque Nm	Torque ft lb	Speed r/min	Weight kg	Weight lb	Length mm	CS distance mm	Spline/ Mounting	Ordering No.
ETD S4										
ETD S4-04-10CTADS	3/8	1 - 5	0.7 - 3.6	1465	1.4	3.1	381	28	– / 1	8433 0237 81
ETD S4-10-10CTADS	3/8	3 - 14	2.2 - 10.3	690	1.4	3.1	381	28	– / 1	8433 0238 18
ETD S4-20-10CTADS	3/8	5 - 20	3.6 - 15	415	1.4	3.1	381	28	– / 1	8433 0239 72
ETD S4 Telescopic										
ETD S4-04-10CTADST	3/8	1 - 5	0.7 - 3.6	1465	1.5	3.3	419	28	2 / 2	8433 0237 94
ETD S4-10-10CTADST	3/8	3 - 14	2.2 - 10.3	690	1.5	3.3	419	28	2 / 2	8433 0238 79
ETD S4-20-10CTADST	3/8	5 - 20	3.6 - 15	415	1.5	3.3	419	28	2 / 2	8433 0239 84
ETD S4 Female Hex										
ETD S4-02-I06CTADS	1/4	0.5 - 2.5	0.35 - 1.8	2930	1.4	3.1	372	28	– / 1	8433 0237 43
ETD S4-04-I06CTADS	1/4	1 - 5	0.7 - 3.6	1465	1.4	3.1	372	28	– / 1	8433 0237 47
ETD S4-10-I06CTADS	1/4	3 - 14	2.2 - 10.3	690	1.5	3.3	372	28	– / 1	8433 0238 06
ETD S7										
ETD S7-20-10CTADS	3/8	5 - 20	3.6 - 15	1380	1.6	3.6	411	28	– / 1	8433 0294 42
ETD S7-30-10CTADS	3/8	6 - 35	4.4 - 25	830	1.6	3.6	411	28	– / 1	8433 0295 07
ETD S7-50-13CTADS	1/2	10 - 55	7.3 - 40	595	2.1	4.7	456	28	2 / 2	8433 0297 37
ETD S7-70-13CTADS	1/2	14 - 80	11 - 58	410	2.4	4.7	477	29.5	2 / 2	8433 0298 04
ETD S7-90-13CTADS	1/2	20 - 95	15 - 69	335	2.8	6.2	477	29.5	2 / 2	8433 0299 11
ETD S7-120-13CTADS	1/2	25 - 125	18 - 91	280	2.9	6.5	477	29.5	2 / 2	8433 0299 72
ETD S7 Telescopic										
ETD S7-20-10CTADST	3/8	5 - 20	3.6 - 15	1380	1.7	3.8	450	28	2 / 2	8433 0294 81
ETD S7-20-10CTADS-T50	3/8	5 - 20	3.6 - 15	1380	1.8	4.0	500	28	2 / 2	8433 0294 85
ETD S7-30-10CTADST	3/8	6 - 35	4.4 - 25	830	1.7	3.8	450	28	2 / 2	8433 0295 21
ETD S7-30-10CTADS-T50	3/8	6 - 35	4.4 - 25	830	1.8	4.0	500	28	2 / 2	8433 0295 84
ETD S7-50-13CTADST	1/2	10 - 55	7.3 - 40	595	2.2	4.9	483	28	3 / 5	8433 0297 83
ETD S7-50-13CTADS-T50	1/2	10 - 55	7.3 - 40	595	2.3	5.1	540	28	3 / 5	8433 0297 94
ETD S7-70-13CTADST	1/2	14 - 80	11 - 58	410	2.5	5.6	504	29.5	3 / 5	8433 0298 34
ETD S7-70-13CTADS-T50	1/2	14 - 80	11 - 58	410	2.6	5.7	562	29.5	3 / 5	8433 0298 63
ETD S7-90-13CTADST	1/2	20 - 95	15 - 69	335	2.9	6.5	504	29.5	3 / 5	8433 0299 41
ETD S7-90-13CTADS-T50	1/2	20 - 95	15 - 69	335	3.0	6.6	562	29.5	3 / 5	8433 0299 43
ETD S7-120-13CTADST	1/2	25 - 125	18 - 91	280	3.0	6.7	504	29.5	3 / 5	8433 0299 85
ETD S7-120-13CTADS-T50	1/2	25 - 125	18 - 91	280	3.1	6.8	562	29.5	3 / 5	8433 0299 93
ETD S7-140-13CTADST	1/2	35 - 140	26 - 103	280	3.0	6.7	504	29.5	3 / 5	8433 0299 98
ETD S7 Ball Retainer										
ETD S7-30-B10CTADS	3/8	6 - 35	3.6 - 15	830	1.6	3.6	411	28	– / 1	8433 0295 09
ETD S7-50-B13CTADS	1/2	10 - 55	7.3 - 40	595	2.1	4.7	456	28	2 / 2	8433 0297 56
ETD S7-70-B13CTADS	1/2	14 - 80	11 - 58	410	2.4	4.7	477	29.5	2 / 2	8433 0298 07
ETD S7 Female Hex										
ETD S7-20-I06CTADS	1/4	5 - 20	3.6 - 15	1380	1.6	3.6	402	28	– / 1	8433 0294 47

Continued....

TENSOR S

Straight electric nutrunners

Model	Square drive in	Torque Nm	Torque ft lb	Speed r/min	Weight kg	Weight lb	Length mm	CS distance mm	Spline/ Mounting	Ordering No.
ETD S9										
ETD S9-100-13CTADS	1/2	25 - 100	19 - 73	795	4.0	8.9	547	31.8	2 / 2	8433 0361 52
ETD S9-200-13CTADS	1/2	50 - 200	36 - 146	370	4.1	9.1	547	31.8	2 / 2	8433 0362 38
ETD S9-270-20CTADS	3/4	65 - 270	47 - 198	250	6.5	14.5	603	36	6 / 8	8433 0363 83
ETD S9-450-20CTADS	3/4	110 - 450	80 - 330	140	7.9	17.6	639	40.3	6 / 8	8433 0364 52
ETD S9-600-20CTADS	3/4	150 - 600	110 - 440	120	7.9	17.6	639	40.3	6 / 8	8433 0364 82
ETD S9-1000-25CTADS	1	250 - 1000	180 - 730	76	12	26.5	770	47	7 / 11	8433 0365 32
ETD S9-1200-25CTADS	1	300 - 1200	220 - 880	62	12	26.5	770	47	7 / 11	8433 0365 80
ETD S9-1500-38CTADS	1 1/2	375 - 1500	280 - 1100	47	16.8	37.0	727	68	8 / 12	8433 0365 97
ETD S9-2000-38CTADS	1 1/2	500 - 2000	370 - 1475	35	16.8	37.0	727	68	8 / 12	8433 0366 15
ETD S9-3000-38CTADS	1 1/2	750 - 3000	550 - 2200	24	21.7	47.8	808	68	8 / 12	8433 0366 35
ETD S9-4000-38CTADS	1 1/2	1000 - 4000	730 - 2950	18	21.7	47.8	808	68	8 / 12	8433 0366 44
ETD S9 Telescopic										
ETD S9-100-13CTADST	1/2	25 - 100	19 - 73	795	4.1	9.1	574	31.8	3 / 5	8433 0362 08
ETD S9-150-13CTADST	1/2	40 - 150	30 - 110	510	4.2	9.4	574	31.8	3 / 5	8433 0362 24
ETD S9-200-13CTADST	1/2	50 - 200	36 - 146	370	4.2	9.4	574	31.8	3 / 5	8433 0362 55
ETD S9-270-20CTADST	3/4	65 - 270	47 - 198	250	6.7	14.9	653	36	6 / 8	8433 0364 12
ETD S9-450-20CTADST	3/4	110 - 450	80 - 330	140	8.0	17.8	689	40.3	6 / 8	8433 0364 61
ETD S9-600-20CTADST	3/4	150 - 600	110 - 440	120	8.0	17.8	689	40.3	6 / 8	8433 0364 96
ETD S9-1000-25CTADST	1	250 - 1000	180 - 730	76	12.2	26.9	824	47	7 / 11	8433 0365 14
ETD S9-1200-25CTADST	1	300 - 1200	220 - 880	62	12.2	26.9	824	47	7 / 11	8433 0365 65
ETD S9-1500-38CTADST	1 1/2	375 - 1500	280 - 1100	47	17	37.5	820	68	8 / 12	8433 0365 95
ETD S9-2000-38CTADST	1 1/2	500 - 2000	370 - 1475	35	17	37.5	820	68	8 / 12	8433 0366 20
ETD S9-3000-38CTADST	1 1/2	750 - 3000	550 - 2200	24	21.9	48.3	903	68	8 / 12	8433 0366 30
ETD S9-4000-38CTADST	1 1/2	1000 - 4000	730 - 2920	18	21.9	48.3	903	68	8 / 12	8433 0366 40

TENSOR S

Pistol grip electric nutrunners

ETP S

- ETP S pistol grip tool for both hand-held and fixtured applications.
- Torque range from 1 to 4000 Nm.
- Telescopic spindles for fixtured applications.
- Female hex quick change drives for bits.

Model	Square drive in	Torque Nm	Torque ft lb	Speed r/min	Weight kg	Weight lb	Length mm	CS distance mm	Spline/ Mounting	Ordering No.
ETP S4										
ETP S4-10-06CTADS	1/4	3 - 12	2.2 - 8.8	735	1.2	2.7	192	21.3	– / –	8433 0235 11
ETP S4-10-10CTADS	3/8	3 - 12	2.2 - 8.8	735	1.2	2.7	194	21.3	– / –	8433 0235 39
ETP S4-20-10CTADS	3/8	5 - 20	3.6 - 15	415	1.7	3.7	243	21.3	– / –	8433 0235 64
ETP S4 Female Hex										
ETP S4-02-I06CTADS	1/4	0.5 - 2.5	0.35 - 1.8	2930	1.2	2.7	200	21.3	– / –	8433 0233 50
ETP S4-04-I06CTADS	1/4	1 - 5	0.7 - 3.6	1465	1.2	2.7	200	21.3	– / –	8433 0234 75
ETP S4-10-I06CTADS	1/4	3 - 12	2.2 - 8.8	735	1.2	2.7	200	21.3	– / –	8433 0235 01
ETP S4 Ball Retainer										
ETP S4-10-B10CTADS	3/8	3 - 12	2.2 - 8.8	735	1.2	2.7	194	21.3	– / –	8433 0235 53
ETP S7										
ETP S7-20-10CTADS	3/8	5 - 20	3.6 - 15	1380	1.9	4.2	274	21.5	– / 1	8433 0313 84
ETP S7-30-10CTADS	3/8	6 - 35	4.4 - 25	830	1.9	4.2	274	21.5	– / 1	8433 0314 03
ETP S7-50-13CTADS	1/2	10 - 55	7.3 - 40	595	2.2	4.9	318	26.8	2 / 2	8433 0314 91
ETP S7-70-13CTADS	1/2	14 - 80	11 - 58	410	2.4	5.4	340	29.5	2 / 2	8433 0315 02
ETP S7-90-13CTADS	1/2	20 - 95	15 - 69	533	2.5	5.6	340	29.5	2 / 2	8433 0315 27
ETP S7-120-13CTADS	1/2	25 - 125	18 - 91	280	2.7	6.0	340	29.5	2 / 2	8433 0315 43
ETP S7 Telescopic										
ETP S7-30-10CTADST	3/8	6 - 35	4.4 - 25	830	2.0	4.4	313	21.5	2 / 2	8433 0314 15
ETP S7-120-13CTADST	1/2	25 - 125	18 - 91	280	2.9	6.4	367	29.5	3 / 5	8433 0315 59
ETP S7 Female Hex										
ETP S7-20-I06CTADS	1/4	5 - 20	3.6 - 15	1380	1.9	4.2	265	21.5	– / 1	8433 0313 61
ETP S7-30-I06CTADS	1/4	6 - 35	4.4 - 25	830	1.9	4.2	265	21.5	– / 1	8433 0314 28
ETP S7 Ball Retainer										
ETP S7-30-B10CTADS	3/8	6 - 35	4.4 - 25	830	1.9	4.2	274	21.5	– / 1	8433 0314 18
ETP S9										
ETP S9-70-13CTADS	1/2	25 - 70	18 - 49	1180	3.7	8.3	395	31.8	2 / 2	8433 0367 19
ETP S9-100-13CTADS	1/2	40 - 100	29 - 73	795	3.9	8.7	395	31.8	2 / 2	8433 0367 45
ETP S9-200-13CTADS	1/2	50 - 200	36 - 146	370	3.9	8.7	395	31.8	2 / 2	8433 0367 86
ETP S9-270-20CTADS	3/4	65 - 270	47 - 198	250	6.5	14.5	451	36	6 / 8	8433 0368 52
ETP S9-450-20CTADS	3/4	110 - 450	80 - 330	140	7.9	17.6	487	40.5	6 / 8	8433 0368 99
ETP S9-600-20CTADS	3/4	150 - 600	110 - 440	120	7.9	17.8	487	40.5	6 / 8	8433 0369 38
ETP S9-1000-25CTADS	1	250 - 1000	180 - 730	76	12	26.5	620	47	7 / 11	8433 0370 11
ETP S9-1200-25CTADS	1	300 - 1200	220 - 880	62	12	26.5	620	47	7 / 11	8433 0370 50
ETP S9-1500-38CTADS	1 1/2	375 - 1500	280 - 1100	47	16.8	37.0	572	68	8 / 12	8433 0370 62
ETP S9-2000-38CTADS	1 1/2	500 - 2000	440 - 1475	38	16.8	37.0	572	68	8 / 12	8433 0371 05
ETP S9-3000-38CTADS	1 1/2	750 - 3000	550 - 2200	24	21.7	47.8	654	68	8 / 12	8433 0372 12
ETP S9-4000-38CTADS	1 1/2	1000 - 4000	730 - 2950	18	21.7	47.8	654	68	8 / 12	8433 0372 55
ETP S9 Telescopic										
ETP S9-100-13CTADST	1/2	40 - 100	29 - 73	795	4.0	8.8	422	31.8	3 / 5	8433 0367 51
ETP S9-270-20CTADST	3/4	65 - 270	47 - 198	250	6.7	14.8	501	36	6 / 8	8433 0368 63
ETP S9-450-20CTADST	3/4	110 - 450	80 - 330	140	8.0	17.6	537	40.3	6 / 8	8433 0369 07
ETP S9-600-20CTADST	3/4	150 - 600	110 - 440	120	8.0	17.6	537	40.3	6 / 8	8433 0369 53
ETP S9-1000-25CTADST	1	250 - 1000	180 - 730	76	12.2	26.9	669	47	7 / 11	8433 0370 31
ETP S9-1200-25CTADST	1	300 - 1200	220 - 880	62	12.2	26.9	669	47	7 / 11	8433 0370 55
ETP S9-1500-38CTADST	1 1/2	375 - 1500	280 - 1100	47	17	37.5	669	68	8 / 12	8433 0370 66
ETP S9-2000-38CTADST	1 1/2	500 - 2000	440 - 1475	35	17	37.5	669	68	8 / 12	8433 0371 08
ETP S9-3000-38CTADST	1 1/2	750 - 3000	550 - 2200	24	21.9	48.3	750	68	8 / 12	8433 0372 24
ETP S9-4000-38CTADST	1 1/2	1000 - 4000	730 - 2950	18	21.9	48.3	750	68	8 / 12	8433 0372 62

TENSOR S

Crowfoot electric nutrunners

In-Line crowfoot tools

DIMENSIONS

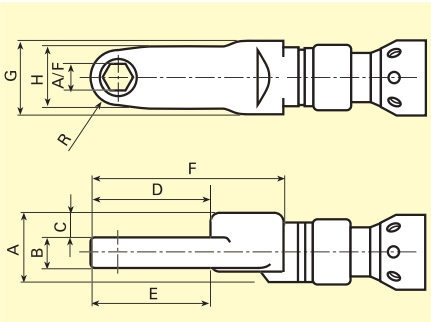

Model	Torque Nm	Torque ft lb	Speed r/min	Weight kg	Weight lb	Length mm	A/F mm	A mm	B mm	C mm	D mm	E mm	F mm	G mm	H mm	R mm	Ordering No.
ETC S7																	
ETC S7-25-13-LI3	6 - 28	4.4 - 20.7	622	2.1	4.6	508	13	34	15	13	59	71	94	35	30	13	8433 0210 90

Offset crowfoot tools

DIMENSIONS

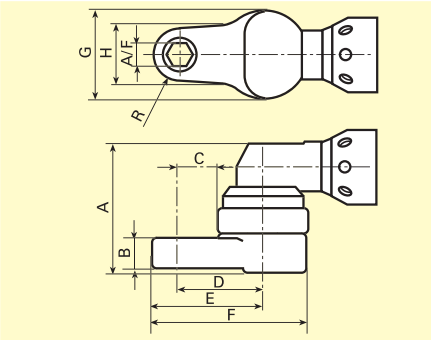

Model	Torque Nm	Torque ft lb	Speed r/min	Weight kg	Weight lb	Length mm	A/F mm	A mm	B mm	C mm	D mm	E mm	F mm	G mm	H mm	R mm	Ordering No.
ETC S4																	
ETC S4-05-7-LO3	1 - 5	0.7 - 3.7	940	1.7	3.7	401	7	56	9	6	25	32	47	37	15	7.5	8433 0210 04
ETC S7																	
ETC S7-15-10-LO5	3.5 - 18	2.6 - 13.3	1297	1.9	4.2	475	10	60	15	48	66	76	91	37	22	10	8433 0210 12
ETC S7-25-13-LO3	5.6 - 28	4.2 - 20.7	887	2.0	4.4	455	13	62	15	20	42	55	76	44	30	13	8433 0210 23
ETC S7-25-13-LO5	5.6 - 28	4.2 - 20.7	887	2.2	4.9	515	13	68	15	62	84	97	118	44	30	13	8433 0210 29
ETC S7-40-13-LO3	8.8 - 44	6.5 - 32.5	533	2.4	5.2	479	13	68	18	25	47	62	82	44	31	14.5	8433 0210 34
ETC S7-40-13-LO5	8.8 - 44	6.5 - 32.5	533	2.4	5.2	526	13	69	18	72	94	108	129	44	31	14.5	8433 0210 38
ETC S7-60-17-LO3	13 - 65	9.6 - 48.1	382	2.8	6.1	507	17	77	24	29	51	66	89	48	30	15	8433 0210 46
ETC S7-60-17-LO5	13 - 65	9.6 - 48.1	382	3.4	7.4	558	17	81	24	78	102	117	140	48	30	15	8433 0210 56
ETC S7-80-21-LO3	18 - 90	13.3 - 66.6	263	3.4	7.6	585	21	90	20	35	66	86	112	63	40	20	8433 0210 60
ETC S7-80-21-LO5	18 - 90	13.3 - 66.6	263	4.3	9.4	651	21	92	20	101	132	152	178	63	40	20	8433 0210 65
ETC S7 Extra heavy duty																	
ETC S7-40-13-AO3	8 - 40	6 - 29	545	2.4	5.5	487	13	60.3	19	33	53	69	86	40	32	16	8433 0211 15
ETC S7-70-17-AO3	14 - 70	11 - 51	390	3.2	7.0	528	17	66.5	19	45	68	87	107	45	42	19.5	8433 0211 32
ETC S7-120-17-AO3	24 - 120	18 - 88	185	4.6	10.1	586	17	88	25	42	68	88	113	51	–	19.8	8433 0211 55
ETC S7-140-17-AO3	28 - 140	21 - 103	160	4.6	10.1	587	17	88	25	42	68	88	113	51	–	19.8	8433 0211 75
ETC S9																	
ETC S9-140-21-LO3	30 - 150	22.2 - 111	320	5.7	12.6	655	21	101	33	35	66	86	112	63	40	20	8433 0210 75
ETC S9-200-21-LO3	43 - 215	31.8 - 159.1	205	10.4	22.9	718	21	146	40	33	70	91	125	77	42	21	8433 0210 80

TENSOR S

Tube nut electric nutrunners

In-Line tube nut tools

DIMENSIONS

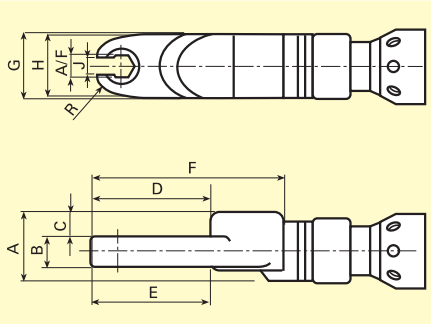

Model	Torque Nm	Torque ft lb	Speed r/min	Weight kg	Weight lb	Length mm	A/F mm	A mm	B mm	C mm	D mm	E mm	F mm	G mm	H mm	J mm	R mm	Ordering No.
ETO S4																		
ETO S4-10-10-LI3	2.5 - 12	1.9 - 8.9	555	1.7	3.8	450	10	32	10	13	37	26	67	34	31	11.5	7	8433 0212 05
ETO S7																		
ETO S7-15-10-LI3	3 - 15	2.2 - 11.1	1458	1.9	4.2	484	10	32	12	11	39	26	68	34	32	14	8	8433 0212 10
ETO S7-18-13-LI3	3.6 - 18	2.7 - 13.3	1035	1.9	4.2	500	13	34	11	15	49	32	84	35	38	16	8.5	8433 0212 15
ETO S7-30-13-LI3	6.6 - 33	4.7 - 24.3	630	2.6	5.6	526	13	43	18	14	47	31	83	38	40	25	10.4	8433 0212 21
ETO S7-35-13-LI3	7 - 35	5.2 - 25.9	610	2.8	6.1	570	13	46	11	21	70	48	113	45	55	32	12.5	8433 0212 25
ETO S7-50-17-LI3	11 - 55	8.2 - 40.7	405	3.2	6.9	658	17	46	12	20	81	39	124	45	59	32	16	8433 0212 35
ETO S7-80-19-LI3	16 - 80	11.9 - 59.2	314	3.7	8.1	629	19	46	18	17	74	52	137	64	59	32	17	8433 0212 40

Offset tube nut tools

DIMENSIONS

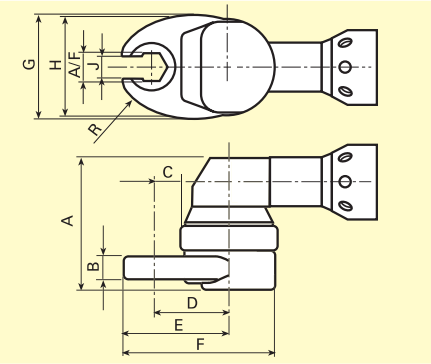

Model	Torque Nm	Torque ft lb	Speed r/min	Weight kg	Weight lb	Length mm	A/F mm	A mm	B mm	C mm	D mm	E mm	F mm	G mm	H mm	J mm	R mm	Ordering No.
ETO S4																		
ETO S4-08-8-LO3	1.7 - 8.5	1.3 - 6.3	648	1.7	3.7	398	8	59	11	4	22	30	45	37	29	10	6	8433 0212 50
ETO S7																		
ETO S7-10-10-LO3	2.4 - 12	1.8 - 8.9	1880	1.8	4.0	435	10	59	10	7	25	35	50	37	31	11.5	7	8433 0212 60
ETO S7-18-13-LO3	3.6 - 18	2.7 - 13.3	1297	2.0	4.4	442	13	61	11	8	30	42	63	44	38	15	8	8433 0212 68
ETO S7-25-13-LO3	5.6 - 28	4.2 - 20.7	533	2.1	4.7	470	13	65	11	13	37	52	75	48	50	31	11	8433 0212 75
ETO S7-50-17-LO3	11 - 55	8.2 - 40.7	382	3.0	6.7	510	17	76	12	18	49	69	97	63	59	32	16	8433 0212 80
ETO S7-80-19-LO3	16 - 80	11.9 - 59.2	263	3.9	8.5	568	19	91	18	18	49	63	97	63	59	32	17	8433 0212 85
ETO S7-100-24-LO3	22 - 110	16.3 - 81.4	179	4.5	10.0	580	24	92	20	23	60	85	119	74	77	33	21	8433 0212 90

TENSOR ST

Angle electric nutrunners

ETV ST

- ETV ST right angle tools are ideal for hand-held applications.
- Torque range from 1 to 600 Nm.
- Tensor ST complements the S range by:
  - Extremely high productivity.
  - More ergonomic benefits.
  - Better operator feedback.
- The ETV ST ATEX tools are certified to be used in environments with hazardous gases and liquids.

Model	Square drive in	Torque Nm	Torque ft lb	Speed r/min	Weight kg	Weight lb	Length mm	CS distance mm	Height mm	Ordering No.
ETV ST31										
ETV ST31-05-10	3/8	1 - 5	0.7 - 3.6	2390	1.0	2.2	381.5	11	39.3	8433 2011 21
ETV ST31-10-10	3/8	3 - 12	2.2 - 8.8	1020	1.0	2.2	381.5	11	39.3	8433 2013 66
ETV ST31-15-10	3/8	5 - 15	3.6 - 10	755	1.0	2.2	381.5	11	39.3	8433 2015 98
ETV ST31-20-10	3/8	5 - 22	3.7 - 16.1	545	1.2	2.6	415	14	42	8433 2017 10
ETV ST31 Ball Retainer										
ETV ST31-05-B10	3/8	1 - 5	0.7 - 3.6	2390	1.0	2.2	381.5	11	39.3	8433 2011 87
ETV ST31-10-B10	3/8	3 - 12	2.2 - 8.8	1020	1.0	2.2	381.5	11	39.3	8433 2014 12
ETV ST31-15-B10	3/8	5 - 15	3.6 - 10	755	1.0	2.2	381.5	11	39.3	8433 2016 36
ETV ST31-20-B10	3/8	5 - 22	3.7 - 16.1	545	1.2	2.6	415	14	42	8433 2018 23
ETV ST31 Female Hex										
ETV ST31-05-I06-QC	-	1 - 5	0.7 - 3.6	2390	1.0	2.2	381.5	11	39.3	8433 2011 95
ETV ST31-10-I06-QC	-	3 - 12	2.2 - 8.8	1020	1.0	2.2	381.5	11	39.3	8433 2014 21
ETV ST61										
ETV ST61-28-10	3/8	6 - 29	4 - 21	1450	1.3	2.9	440	14	42	8433 2021 76
ETV ST61-30-10	3/8	7 - 35	5 - 25	1090	1.3	2.9	440	15.5	42	8433 2023 92
ETV ST61-40-10	3/8	8 - 40	6 - 29	1090	1.5	3.3	454	18	47	8433 2027 85
ETV ST61-50-10	3/8	10 - 55	7 - 40	655	1.5	3.3	454	18	47	8433 2031 58
ETV ST61-70-13	1/2	15 - 80	10 - 58	475	2.0	4.5	466	20	58	8433 2035 30
ETV ST61-100-13	1/2	20 - 100	15 - 80	350	2.5	5.5	502	22.5	60	8433 2039 02
ETV ST61-150-13	1/2	30 - 160	22 - 117	227	3.0	6.6	536	25.5	65	8433 2042 70
ETV ST61-180-13	1/2	35 - 180	26 133	190	3.0	6.6	536	25.5	65	8433 2045 53
ETV ST61-200-20	1/2	40 - 200	30 - 154	185	3.0	6.6	537.5	27	69.5	8433 2046 39
ETV ST61 ATEX										
ETV ST61-28-10-ATEX	3/8	6 - 29	4 - 21	1450	1.3	2.9	440	14	42	8433 2023 76
ETV ST61-30-10-ATEX	3/8	7 - 35	5 - 25	1090	1.3	2.9	440	15.5	42	8433 2026 92
ETV ST61-40-10-ATEX	3/8	8 - 40	6 - 29	1090	1.5	3.3	454	18	47	8433 2030 85
ETV ST61-50-10-ATEX	3/8	10 - 55	7 - 40	655	1.5	3.3	454	18	47	8433 2034 98
ETV ST61-70-13-ATEX	1/2	15 - 80	10 - 58	475	2.0	4.5	466	20	58	8433 2037 90
ETV ST61-100-13-ATEX	1/2	20 - 100	15 - 80	350	2.5	5.5	502	22.5	60	8433 2041 41
ETV ST61-150-13-ATEX	1/2	30 - 160	22 - 117	227	3.0	6.6	536	25.5	65	8433 2045 20
ETV ST61-200-20-ATEX	1/2	40 - 200	30 - 154	185	3.0	6.6	537.5	27	69.5	8433 2048 49
ETV ST61 Ball Retainer										
ETV ST61-28-B10	3/8	6 - 29	4 - 21	1450	1.3	2.9	440	14	42	8433 2022 32
ETV ST61-30-B10	3/8	7 - 35	5 - 25	1090	1.3	2.9	440	15.5	42	8433 2025 09
ETV ST61-40-B10	3/8	8 - 40	6 - 29	1090	1.5	3.3	454	18	47	8433 2029 13
ETV ST61-50-B10	3/8	10 - 55	7 - 40	655	1.5	3.3	454	18	47	8433 2032 87
ETV ST61-70-B13	1/2	15 - 80	10 - 58	475	2.0	4.5	466	20	60	8433 2036 93
ETV ST61-100-B13	1/2	20 - 100	15 - 80	350	2.5	5.5	502	22.5	58	8433 2040 70
ETV ST61-150-B13	1/2	30 - 160	22 - 117	227	3.0	6.6	536	25.5	65	8433 2043 62
ETV ST61-180-B13	1/2	35 - 180	26 - 133	190	3.0	6.6	536	25.5	65	8433 2045 61

Continued....

TENSOR ST

Angle electric nutrunners

Model	Square drive in	Torque Nm	Torque ft lb	Speed r/min	Weight kg	Weight lb	Length mm	CS distance mm	Height mm	Ordering No.
ETV ST61 Flush Socket										
ETV ST61-28-FS13	-	6 - 29	4 - 21	1450	1.3	2.9	440	14	35	8433 2022 56
ETV ST61-28-FS12	-	6 - 29	4 - 21	1450	1.3	2.9	440	14	35	8433 2022 65
ETV ST61-28-FS5/16	-	6 - 29	4 - 21	1450	1.3	2.9	440	14	35	8433 2022 79
ETV ST61-30-FS13	-	7 - 35	5 - 25	1090	1.3	2.9	440	14	35	8433 2025 62
ETV ST61-30-FS10	-	7 - 35	5 - 25	1090	1.3	2.9	440	14	35	8433 2025 72
ETV ST61-40-FS	-	8 - 40	6 - 29	1090	1.5	3.3	454	18	39	8433 2029 50
ETV ST61-50-FS	-	10 - 55	7 - 40	655	1.5	3.3	454	18	39	8433 2033 15
ETV ST61-70-FS-S	-	15 - 80	10 - 58	475	2.0	4.5	466	20	49.5	8433 2037 36
ETV ST61-100-FS-S	-	20 - 110	15 - 80	350	2.5	5.5	502	23	50.5	8433 2040 75
ETV ST61-150-FS	-	30 - 160	22 - 117	227	3.0	6.6	539	26	58	8433 2044 14
ETV ST61-200-FS	-	40 - 200	30 - 154	185	3.0	6.6	540.5	27	58	8433 2047 21
ETV ST61 Hold & Drive										
ETV ST61-28-HAD	-	6 - 29	4 - 21	1450	1.9	4.2	463	18.3	80	8433 2023 21
ETV ST61-30-HAD	-	7 - 35	5 - 25	1090	1.9	4.2	463	18.3	80	8433 2026 25
ETV ST61-40-HAD	-	8 - 40	6 - 29	1090	2.0	4.4	440	18.3	80	8433 2030 08
ETV ST61-50-HAD	-	10 - 55	7 - 40	655	2.0	4.4	440	18.3	80	8433 2033 92
ETV ST61-90-HAD	-	20 - 95	15 - 70	400	2.1	4.5	522	26	80	8433 2038 26
ETV ST61-120-HAD	-	30 - 130	22 - 100	350	2.6	5.5	540	25.5	80	8433 2041 53
ETV ST61-150-HAD	-	30 - 160	22 - 117	220	3.1	6.6	540	26	80	8433 2044 80
ETV ST61-200-HAD	-	40 - 200	30 - 154	185	3.1	6.6	541.5	26	80	8433 2048 27
ETV ST61 with Barcode Scanner										
ETV ST61-28-10-BCR	3/8	6 - 29	4 - 21	1450	1.4	3.2	440	14	42	8433 2023 46
ETV ST61-28-B10-BCR	3/8	6 - 29	4 - 21	1450	1.4	3.2	440	14	42	8433 2023 55
ETV ST61-30-10-BCR	3/8	7 - 35	5 - 25	1090	1.4	3.2	440	15.5	42	8433 2026 66
ETV ST61-30-B10-BCR	3/8	7 - 35	5 - 25	1090	1.4	3.2	440	15.5	42	8433 2026 72
ETV ST61-50-10-BCR	3/8	10 - 55	7 - 40	655	1.6	3.6	454	18	47	8433 2034 67
ETV ST61-50-B10-BCR	3/8	10 - 55	7 - 40	655	1.6	3.6	454	18	47	8433 2034 75
ETV ST61-70-10-BCR	1/2	15 - 80	10 - 58	475	2.1	4.8	466	20	58	8433 2037 55
ETV ST61-70-B10-BCR	1/2	15 - 80	10 - 58	475	2.1	4.8	466	20	58	8433 2037 61
ETV ST81										
ETV ST81-50-10	3/8	16 - 55	12 - 40	1090	1.8	3.9	473	18	48	8433 2051 55
ETV ST81-70-13	1/2	20 - 80	15 - 58	790	2.3	5.0	485	20	58	8433 2053 48
ETV ST81-100-13	1/2	20 - 100	15 - 80	540	2.7	5.9	522	22.5	60	8433 2056 82
ETV ST81-150-13	1/2	30 - 160	22 - 117	380	3.2	7.0	555	25.5	65	8433 2060 12
ETV ST81-180-13	1/2	35 - 180	26 133	310	3.2	7.0	555	25.5	65	8433 2062 31
ETV ST81-200-20	1/2	40 - 200	30 - 154	300	3.2	7.0	556.5	27	69.5	8433 2063 42
ETV ST81 Ball Retainer										
ETV ST81-50-B10	3/8	16 - 55	12 - 40	1090	1.8	3.9	473	18	48	8433 2052 36
ETV ST81-70-B13	1/2	20 - 80	15 - 58	790	2.3	5.0	485	20	58	8433 2054 62
ETV ST81-100-B13	1/2	20 - 100	15 - 80	540	2.7	5.9	522	22.5	60	8433 2058 24
ETV ST81-150-B13	1/2	30 - 160	22 - 117	380	3.3	7.0	555	25.5	65	8433 2060 97
ETV ST81-180-B13	1/2	35 - 180	26 - 133	310	3.2	7.0	555	25.5	65	8433 2062 43
ETV ST81 Flush Socket										
ETV ST81-50-FS	-	16 - 55	12 - 40	1090	1.8	3.9	472	18	39	8433 2052 53
ETV ST81-70-FS-S	-	20 - 80	15 - 58	790	2.3	5.0	497	20	49.5	8433 2055 07
ETV ST81 Hold & Drive										
ETV ST81-50-HAD	-	16 - 55	12 - 40	1090	2.3	5.0	473	18.5	80	8433 2052 80
ETV ST81-90-HAD	-	20 - 95	15 - 70	665	2.4	5.1	540	26	80	8433 2056 04
ETV ST81-120-HAD	-	30 - 130	22 - 100	540	2.8	6.0	560	25.5	80	8433 2058 65
ETV ST81-150-HAD	-	30 - 160	22 - 117	365	3.3	7.0	560	26	80	8433 2061 81
ETV ST81-200-HAD	-	40 - 200	30 - 154	300	3.3	7.0	561.5	26	80	8433 2065 09
ETV ST81 Extended										
ETV ST81-70-13-L150	1/2	20 - 80	15 - 58	790	2.3	5.0	633	20	58	8433 2055 62
ETV ST81-100-13-L150	1/2	20 - 110	15 - 80	540	2.7	5.9	672	22.5	60	8433 2059 36
ETV ST81-200-20-L150	1/2	40 - 200	30 - 154	300	3.2	7.0	708.5	27	69.5	8433 2065 29
ETV ST101										
ETV-ST101-100-13	1/2	20 - 100	15 - 74	914	4.2	9.3	572	22.5	43.9	8433 2080 10
ETV-ST101-180-13	1/2	50 - 180	37 - 133	485	4.2	9.3	600	25.3	47.2	8433 2080 51
ETV-ST101-200-20	1/2	50 - 200	37 - 147	485	4.4	9.7	602	27.5	47.2	8433 2080 92
ETV-ST101-270-20	3/4	65 - 270	48 - 199	381	7.3	16.1	672	32.9	61.9	8433 2081 23
ETV-ST101-370-20	3/4	90 - 370	66 - 273	277	7.3	16.1	672	32.9	61.9	8433 2082 26
ETV-ST101-450-20	3/4	110 - 450	81 - 332	230.9	10.6	23.4	715	54.0	76.4	8433 2082 81
ETV-ST101-600-25	1	150 - 600	111 - 443	151	10.6	23.4	715	54.0	76.4	8433 2083 56

Continued....

TENSOR ST

Angle electric nutrunners

Model	Square drive in	Torque Nm	Torque ft lb	Speed r/min	Weight kg	Weight lb	Length mm	CS distance mm	Height mm	Ordering No.
ETV ST101 Ball Retainer/Fan										
ETV-ST101-100-B13	1/2	20 - 100	15 - 74	914	4.2	9.3	572	22.5	43.9	8433 2080 20
ETV-ST101-100-B13-F	1/2	20 - 100	15 - 74	914	4.2	9.3	572	22.5	49.3	8433 2080 35
ETV-ST101-180-B13	1/2	50 - 180	37 - 133	485	4.2	9.3	600	25.3	47.2	8433 2080 55
ETV-ST101-180-B13-F	1/2	50 - 180	37 - 133	485	4.2	9.3	600	25.3	47.2	8433 2080 65
ETV ST101 Flush Socket/Fan										
ETV-ST101-100-FS	1/2	20 - 100	15 - 74	914	4.2	9.3	572	23	50.2	8433 2080 25
ETV-ST101-100-FS-F	1/2	20 - 100	15 - 74	914	4.2	9.3	572	23	50.2	8433 2080 40
ETV-ST101-180-FS	-	50 - 180	37 - 133	485	4.2	9.3	600	26.0	58.0	8433 2080 60
ETV-ST101-180-FS-F	-	50 - 180	37 - 133	485	4.2	9.3	600	26.0	58.0	8433 2080 70
ETV-ST101-200-FS	1/2	50 - 200	37 - 147	485	4.4	9.7	602	28.0	58.0	8433 2080 96
ETV-ST101-200-FS-F	1/2	50 - 200	37 - 147	485	4.4	9.7	602	28.0	58.0	8433 2081 03
ETV-ST101-270-FS	-	65 - 270	48 - 199	381	7.5	16.4	672	33.0	77.0	8433 2081 35
ETV-ST101-270-FS-F	-	65 - 270	48 - 199	381	7.5	16.5	672	33.0	77.0	8433 2081 60
ETV-ST101-370-FS	-	90 - 370	66 - 273	277	7.5	16.5	672	34.3	77.0	8433 2082 38
ETV-ST101-370-FS-F	-	90 - 370	66 - 273	277	7.5	16.5	672	34.3	77.0	8433 2082 52
ETV-ST101-450-FS	-	110 - 450	81 - 332	230.9	10.0	22.0	715	54.0	68.9	8433 2082 88
ETV-ST101-450-FS-F	-	110 - 450	81 - 332	230.9	10.0	22.0	715	54.0	68.9	8433 2082 96
ETV-ST101-600-FS	-	150 - 600	111 - 443	151	10.0	22.0	715	54.0	68.9	8433 2083 64
ETV-ST101-600-FS-F	-	150 - 600	111 - 443	151	10.0	22.0	715	54.0	68.9	8433 2083 64
ETV ST101 Fan										
ETV-ST101-100-13-F	1/2	20 - 100	15 - 74	914	4.2	9.3	572	22.5	43.9	8433 2080 30
ETV-ST101-180-13-F	1/2	50 - 180	37 - 133	485	4.2	9.3	600	25.3	47.2	8433 2080 62
ETV-ST101-200-20-F	1/2	50 - 200	37 - 147	485	4.4	9.7	602	27.5	47.2	8433 2080 93
ETV-ST101-270-20-F	3/4	65 - 270	48 - 199	381	7.3	16.1	672	32.9	61.9	8433 2081 45
ETV-ST101-370-20-F	3/4	90 - 370	66 - 273	277	7.3	16.1	672	32.9	61.9	8433 2082 48
ETV-ST101-450-20-F	3/4	110 - 450	81 - 332	230.9	10.6	23.4	715	54.0	76.4	8433 2082 90
ETV-ST101-600-25-F	1	150 - 600	111 - 443	151	10.6	23.4	715	54.0	76.4	8433 2083 69
ETV ST101 Intel/Fan										
ETV-ST101-100-Intel	1/2	20 - 100	15 - 74	914	4.6	10.2	572	23	81.9	8433 2080 28
ETV-ST101-100-Intel-F	1/2	20 - 100	15 - 74	914	4.6	10.2	572	23	81.9	8433 2080 47
ETV-ST101-180-Intel	1/2	50 - 180	37 - 133	485	4.6	10.1	600	26.0	90.1	8433 2080 61
ETV-ST101-180-Intel-F	1/2	50 - 180	37 - 133	485	4.6	10.2	600	26.0	90.1	8433 2080 98
ETV-ST101-200-Intel	1/2	50 - 200	37 - 147	485	4.8	10.6	602	36.1	90.1	8433 2081 01
ETV-ST101-200-Intel-F	1/2	50 - 200	37 - 147	485	4.8	10.6	602	36.1	90.1	8433 2081 02
ETV-ST101-270-Intel	3/4	65 - 270	48 - 199	381	8.4	18.5	672	33.0	113.2	8433 2081 40
ETV-ST101-270-Intel-F	3/4	65 - 270	48 - 199	381	8.4	18.5	672	33.0	113.2	8433 2081 98
ETV-ST101-370-Intel	3/4	66 - 273	90 - 370	277	8.4	18.5	672	36.2	113.2	8433 2082 40
ETV-ST101-370-Intel-F	3/4	66 - 273	90 - 370	277	8.4	18.5	672	36.2	113.2	8433 2082 59
ETV ST101 Hold & Drive/Fan										
ETV-ST101-100-HAD	1/2	20 - 100	15 - 74	914	4.9	10.8	572	23	71.4	8433 2080 45
ETV-ST101-100-HAD-F	1/2	20 - 100	15 - 74	914	4.6	10.2	572	23	71.4	8433 2080 46
ETV-ST101-180-HAD	-	50 - 180	37 - 133	485	4.9	10.8	600	26.0	80.1	8433 2080 88
ETV-ST101-180-HAD-F	-	50 - 180	37 - 133	485	4.6	10.1	600	26.0	80.1	8433 2080 95
ETV-ST101-200-HAD	1/2	50 - 200	37 - 147	485	5.1	11.2	602	28	80.2	8433 2080 99
ETV-ST101-200-HAD-F	1/2	50 - 200	37 - 147	485	5.1	11.2	602	28	80.2	8433 2081 04
ETV-ST101-270-HAD	-	65 - 270	48 - 199	381	8.3	18.3	672	33.0	103.5	8433 2081 92
ETV-ST101-270-HAD-F	-	65 - 270	48 - 199	381	8.3	18.3	672	33.0	103.5	8433 2081 95
ETV-ST101-370-HAD	-	90 - 370	66 - 273	277	8.3	18.3	672	34.3	103.5	8433 2082 55
ETV-ST101-370-HAD-F	-	90 - 370	66 - 273	277	8.3	18.3	672	34.3	103.5	8433 2082 58
ETV-ST101-450-HAD	-	110 - 450	81 - 332	230.9	11.7	25.8	715	54.0	104.2	8433 2082 97
ETV-ST101-450-HAD-F	-	110 - 450	81 - 332	230.9	11.7	25.8	715	54.0	104.2	8433 2082 98
ETV-ST101-600-HAD	-	150 - 600	111 - 443	151	11.7	25.8	715	54.0	104.2	8433 2083 90
ETV-ST101-600-HAD-F	-	150 - 600	111 - 443	151	11.7	25.8	715	54.0	104.2	8433 2083 93
ETV ST101 Fixtured Extension/Fan										
ETV ST101-180-13-M	1/2	50 - 180	37 - 133	485	5.0	11	673	25.3	47.2	8433 2080 82
ETV ST101-180-13-M-F	1/2	50 - 180	37 - 133	485	5.0	11	673	25.3	47.2	8433 2080 85
ETV ST101-270-20-M	3/4	65 - 270	48 - 199	381	8.5	18.8	763	32.9	61.9	8433 2081 82
ETV ST101-370-20-M	3/4	90 - 370	66 - 273	277	8.5	18.8	763	32.9	61.9	8433 2082 60
ETV ST101 Torque Multiplier/Fan										
ETV ST101-600-TM	3/4	150 - 600	111 - 443	132	7.6	16.8	613	30	143	8433 2083 62
ETV-ST101-600-TM-F	3/4	150 - 600	111 - 443	132	7.6	16.8	613	30	143	8433 2083 96
ETV-ST101-1000-TM	1	250 -1000	184 - 734	77.1	11.3	24.3	679	40	188	8433 2084 05
ETV-ST101-1000-TM-F	1	250 -1000	184 - 734	77.1	11.3	24.3	679	40	188	8433 2084 10

TENSOR ST

Straight electric nutrunners

ETD ST

- ETD ST inline tools.
- Torque range from 1 to 1000 Nm.
- Tensor ST complements the S range by ensuring extremely high levels of productivity and better operator feed-back.

Model	Square drive in	Torque Nm	Torque ft lb	Speed r/min	Weight kg	Weight lb	Length mm	CS distance mm	Spline/ Mounting	Ordering No.
ETD ST31										
ETD ST31-05-10	3/8	1 - 5	1.1 - 3.6	2825	0.9	2.0	388	24	– / 1	8433 2112 42
ETD ST31-10-10	3/8	2 - 10	2.2 - 7.2	1200	1.1	2.4	388	24	– / 1	8433 2114 86
ETD ST31 Telescopic										
ETD ST31-05-10-T25	3/8	1 - 5	1.1 - 3.6	2825	0.9	2.0	437	24	– / 13	8433 2111 34
ETD ST31-10-10-T25	3/8	2 - 10	2.2 - 7.2	1200	1.1	2.4	437	24	– / 13	8433 2113 79
ETD ST31 Ball Retainer Telescopic										
ETD ST31-05-B10-T25	3/8	1 - 5	1.1 - 3.6	2825	1.1	2.4	437	24	– / 13	8433 2113 44
ETD ST31 Female Hex										
ETD ST31-05-I06	1/4	1 - 5	1.1 - 3.6	2825	0.9	2.0	350	24	– / 14	8433 2112 87
ETD ST61										
ETD ST61-15-10	3/8	4 - 16	3 - 12	2250	1.4	3.1	438	24	– / 1	8433 2120 91
ETD ST61-20-10	3/8	5 - 22	3.6 - 16	1700	1.4	3.1	438	24	– / 1	8433 2122 62
ETD ST61-30-10	3/8	6 - 35	4.4 - 25	1020	1.4	3.1	429	24	– / 1	8433 2125 06
ETD ST61-50-13	1/2	10 - 55	7.3 - 40	740	1.9	4.2	474	24	2 / 2	8433 2128 79
ETD ST61-70-13	1/2	15 - 80	12 - 58	505	2.3	5.0	491	15	2 / 2	8433 2132 51
ETD ST61-90-13	1/2	20 - 95	15 - 70	410	2.3	5.0	491	15	2 / 2	8433 2136 22
ETD ST61 Telescopic										
ETD ST61-15-10-T25	3/8	4 - 16	3 - 12	2250	1.5	3.3	477	24	2 / 2	8433 2120 43
ETD ST61-20-10-T25	3/8	5 - 20	3.6 - 15	1700	1.5	3.3	477	24	2 / 2	8433 2121 55
ETD ST61-30-10-T25	3/8	6 - 35	4.4 - 25	1020	1.5	3.3	468	24	2 / 2	8433 2123 80
ETD ST61-50-13-T25	1/2	10 - 55	7.3 - 40	740	2.1	4.6	501	24	3 / 5	8433 2127 54
ETD ST61-70-13-T25	1/2	15 - 80	12 - 58	505	2.4	5.4	518	17	3 / 5	8433 2131 27
ETD ST61-90-13-T25	1/2	20 - 95	15 - 70	410	2.4	5.4	518	17	3 / 5	8433 2134 99
ETD ST61-120-13-T25	1/2	25 - 125	19 - 95	305	2.4	5.4	518	17	3 / 5	8433 2138 68
ETD ST61 Female Hex										
ETD ST61-15-I06	1/4	4 - 16	3 - 12	2250	1.4	3.1	430	24	– / 1	8433 2121 36
ETD ST81										
ETD ST81-30-10	1/2	10 - 30	7 - 22	1700	1.8	4.0	450	24	– / 1	8433 2151 93
ETD ST81-50-13	1/2	16 - 50	12 - 37	1230	2.1	4.6	493	24	2 / 2	8433 2153 34
ETD ST81-70-13	1/2	15 - 70	12 - 51	880	2.5	5.5	510	15	2 / 2	8433 2156 03
ETD ST81-90-13	1/2	20 - 95	15 - 70	675	2.5	5.5	510	15	2 / 2	8433 2158 14
ETD ST81-120-13	1/2	25 - 125	19 - 91	505	2.5	5.5	510	15	2 / 2	8433 2160 25
ETD ST81 Telescopic										
ETD ST81-30-10-T25	3/8	10 - 30	7 - 22	1700	1.9	4.2	488	24	2 / 2	8433 2151 21
ETD ST81-50-13-T25	1/2	16 - 50	12 - 37	1230	2.3	5.0	520	24	3 / 5	8433 2152 72
ETD ST81-70-13-T25	1/2	15 - 70	12 - 51	880	2.6	5.8	538	17	3 / 5	8433 2154 98
ETD ST81-90-13-T25	1/2	20 - 95	15 - 70	675	2.6	5.8	538	17	3 / 5	8433 2157 25
ETD ST81-120-13-T25	1/2	25 - 125	19 - 91	505	2.6	5.8	538	17	3 / 5	8433 2159 53
ETD ST81-200-20-T25	3/4	50 - 200	36 - 146	281	5.1	11.2	600	33	6 / 8	8433 2162 25
ETD ST101										
ETD ST101-120-13	1/2	30 - 120	22 - 88	873	3.2	7.0	631	30.3	-	8433 2180 22
ETD ST101-150-20	1/2	30 - 150	22 - 109	685	4.3	9.3	706	33	-	8433 2181 36
ETD ST101-200-20	3/4	50 - 200	36 - 146	500	4.3	9.3	706	33	-	8433 2182 05
ETD ST101-300-20	3/4	70 - 300	51 - 221	345	4.3	9.3	706	33	-	8433 2182 70
ETD ST101-500-20	3/4	120 - 500	88 - 368	202	8.3	18.5	717	33	-	8433 2183 28
ETD ST101-750-25	1	150 - 750	109 - 553	141	9.1	20.3	681	45	-	8433 2184 40
ETD ST101-1000-25	1	250 - 1000	184 - 737	94	9.7	21.6	708	45	-	8433 2185 60
ETD ST101 Fan										
ETD ST101-120-13-F	1/2	30 - 120	22 - 88	873	3.2	7.0	631	30.3	-	8433 2180 28
ETD ST101-150-20-F	1/2	30 - 150	22 - 109	685	4.3	9.3	706	33	-	8433 2181 40
ETD ST101-200-20-F	3/4	50 - 200	36 - 146	500	4.3	9.3	706	33	-	8433 2182 10
ETD ST101-300-20-F	3/4	70 - 300	51 - 221	345	4.3	9.3	706	33	-	8433 2182 72
ETD ST101-500-20-F	3/4	120 - 500	88 - 368	202	8.3	18.5	717	33	-	8433 2183 30
ETD ST101-750-25-F	1	150 - 750	109 - 553	141	9.1	20.3	681	45	-	8433 2184 50
ETD ST101-1000-25-F	1	250 - 1000	184 - 737	94	9.7	21.6	708	45	-	8433 2185 70

Continued....

TENSOR ST

Straight electric nutrunners

Model	Square drive in	Torque Nm	Torque ft lb	Speed r/min	Weight kg	Weight lb	Length mm	CS distance mm	Spline/ Mounting	Ordering No.
ETD ST101 Telescopic										
ETD-ST101-120-13-T25	1/2	30 - 120	22 - 88	873	3.3	7.3	656	30.3	-	8433 2180 32
ETD-ST101-150-20-T40	1/2	30 - 150	22 - 109	685	4.4	9.7	656	30.3	-	8433 2181 46
ETD-ST101-200-20-T40	3/4	50 - 200	36 - 146	500	4.4	9.7	756	33.0	-	8433 2182 23
ETD-ST101-300-20-T40	3/4	70 - 300	51 - 221	345	4.4	9.7	756	33.0	-	8433 2182 82
ETD-ST101-500-20-T40	3/4	120 - 500	88 - 368	223.8	8.4	18.5	768	36.5	-	8433 2183 38
ETD-ST101-750-25-T50	1	150 - 750	109 - 553	156.6	9.2	20.3	727	45.0	-	8433 2184 56
ETD-ST101-1000-25-T50	1	250 - 1000	184 - 737	103.2	9.8	21.6	754	45.0	-	8433 2185 78
ETD ST101 Telescopic Fan										
ETD-ST101-120-13-T25F	1/2	30 - 120	22 - 88	873	3.3	7.3	656	30.3	-	8433 2180 48
ETD-ST101-150-13-T40F	1/2	30 - 150	22 - 109	685	4.4	9.7	656	30.3	-	8433 2181 59
ETD-ST101-200-20-T40F	3/4	50 - 200	36 - 146	500	4.4	9.7	756	33.0	-	8433 2182 45
ETD-ST101-300-20-T40F	3/4	70 - 300	51 - 221	345	4.4	9.7	756	33.0	-	8433 2182 91
ETD-ST101-500-20-T40F	3/4	120 - 500	88 - 368	223.8	8.4	18.5	769	36,5	-	8433 2183 49
ETD-ST101-750-25-T50F	1	150 - 750	109 - 553	156.6	9.2	20.3	769	45.0	-	8433 2184 69
ETD-ST101-1000-25-T50F	1	250 - 1000	184 - 737	103.2	9.8	21.6	755	45.0	-	8433 2185 89
ETD ST101 Ball Retainer Telescopic/Fan										
ETD-ST101-120-B13-T25	1/2	30 - 120	22 - 88	873	3.3	7.3	656	30.3	-	8433 2180 38
ETD-ST101-120-B13-T25-F	1/2	30 - 120	22 - 88	873	3.3	7.3	656	30.3	-	8433 2180 55
ETD ST101-150-B20-T40	1/2	30 - 150	22 - 109	685	4.4	9.7	732	33	-	8433 2181 50
ETD ST101-150-B20-T40-F	1/2	30 - 150	22 - 109	685	4.4	9.7	732	33	-	8433 2181 65

TENSOR ST

Pistol grip electric nutrunners

ETP ST

- ETP ST is a pistol grip model for hand-held applications.
- Torque range from 1 to 20 Nm.
- Female hex drive for bits.
- Low weight and ergonomic grip.
- Easy to access, reverse button.
- Operator friendly, feedback signals with sound and lights.

Model	Square drive in	Torque Nm	Torque ft lb	Speed r/min	Weight kg	Weight lb	Length mm	Height mm	Ordering No.
ETP ST32									
ETP ST32-05-10	3/8	1 - 5	0.7 - 3.6	2820	0.75	1.7	197	179	8433 2211 03
ETP ST32-05-I06	1/4	1 - 5	0.7 - 3.6	2820	0.75	1.7	197	179	8433 2212 19
ETP ST32-10-10	3/8	3 - 11	2.2 - 8.0	1210	0.8	1.8	197	179	8433 2213 48
ETP ST32-10-I06	1/4	3 - 11	2.2 - 8.0	1210	0.8	1.8	197	179	8433 2214 63
ETP ST32-20-I06	1/4	5 - 20	3.6 - 15.0	677	0.91	2	235	179	8433 2217 11
ETP ST32-20-10	3/8	5 - 20	3.6 - 15.0	677	0.91	2	235	179	8433 2216 95
ETP ST32 with Barcode Scanner									
ETP ST32-05-10BCR	3/8	1 - 5	0.7 - 3.6	2820	0.87	2	197	205	8433 2211 13
ETP ST32-05-I06BCR	1/4	1 - 5	0.7 - 3.7	2820	0.87	2	197	205	8433 2212 29
ETP ST32-10-10BCR	3/8	3 - 11	2.2 - 8.0	1210	0.92	2.1	197	205	8433 2213 58
ETP ST32-10-I06BCR	1/4	3 - 11	2.2 - 8.0	1210	0.92	2.1	197	205	8433 2214 73
ETP ST32-20-I06BCR	1/4	5 - 20	3.6 - 15.0	677	1.03	2.3	237	205	8433 2217 26
ETP ST32-20-10BCR	3/8	5 - 20	3.6 - 15.0	677	1.03	2.3	237	205	8433 2217 05

TENSOR DS/DL CONTROLLER

DS/DL 300 Drive

Applications

The Tensor DS nutrunner and DL screwdriver series has been developed to give you the benefits of controlled tightening and advanced electric systems throughout your assembly operations. Electric controlled tightening can significantly reduce your assembly costs and improve overall productivity. The simplicity and reliability, combined with outstanding flexibility and accuracy, makes the Tensor DS and DL series a given alternative for your quality critical applications.The systems have a well proven track record of premium quality and reliability in a multitude of industries, e.g. aerospace, automotive, construction, white goods and electronics.

Drive functionality overview

The drive is the heart of any electrical quality-fastening process. Used both to control and monitor tools, the DS and DL drives provide a high degree of functionality with minimal setup and configuration. The DS drive runs with the Tensor DS nutrunners and the DL drive is used together with Tensor DL screwdrivers. There are two functionality levels of the drives: The Basic (D302 and 303) model, for stations not requiring multi-torque capability, and the Advanced (D312 and 313) model.

Tensor DS and DL reduce costs

The Tensor DS and DL systems reduce costs through three major benefits:

Elimination of assembly problems

Through its control and monitoring functionality, Tensor DS/DL will bring you closer to zero fault production. By alerting the operator to the most common errors before they continue down the line, the system ensures high-quality end products, and saves you a fortune in reworking costs.

One tool for several applications

The Tensor DS/DL can be set with up to 10 different torque settings making it possible to use the same tool for several applications. This reduces operating costs and allows a cleaner design of the work area.

Tensor DS/DL improves productivity

The unsurpassed power-to-weight ratio together with the high speed of the tool makes it possible for reduced cycle times. The highly precise torque control system – DigiTork – ensures accuracies of +/- 10% over +/- 3 sigma.

POWER FOCUS

The most versatile tool controller

Market leader

Atlas Copco is the global market leader for fastening equipment and secures this position with the Power Focus product range.

Power Focus is a modular range of controllers, with full flexibility, designed for applications ranging from single spindle hand-held operations to fixtured multiple nutrunning systems. Advanced process control and monitoring functions make it easy to view and collect data using the Internet infrastructure.

Total quality control

The Power Focus range controls tools from the Tensor S, ST, SL, DS and ETX families. With its built-in functions, it does not just run the tool, it also participates in controlling the station or line segment. The Power Focus and associated software packages provide easy-to-understand information for everyone from operators to plant managers.

All the building blocks

The Power Focus is based on standard hardware and software components which, when combined, will fulfill all demands, from the most basic non-networked system to full integration into the factory network. The modules fit together using the “plug-and-play” concept.

Control the assembly process

Assembly process control and quality assurance is made easy by advanced control functions. The operator is guided and monitored through the process, avoiding mistakes that can result in costly quality problems. On receipt of assembly information, the Power Focus automatically selects the correct tightening sequence and parameters.

Built-in connectivity

Fastening data management and communications is a major requirement in modern assembly operations. Many plants demand instant fastening data accessible at different levels in the factory. Atlas Copco provides standardized communication solutions with a solid base for integration and the flexibility for future needs.

RBU cuts downtime

Atlas Copco’s patented Rapid Backup Unit (RBU) concept transfers functionality to a non-configured hardware unit, ensuring that hardware can easily be upgraded should functionality requirements change. The RBU also acts as back-up for programming and configuration. If a change of hardware is required, just fit the RBU to the new hardware, switch on the unit and you’re ready. All programming and network configurations are transferred in seconds. The RBU cuts downtime to a minimum.

The Power Focus 4000 is available in two versions, Compact and Graph. The difference between them is the user interface, where the Graph features the color display and a full keyboard.

Compact

This version offers full functionality at a lower cost, but requires a PC with the ToolsTalk PF software for process set-up.

Graph

With the Graph hardware, you have full stand-alone programming possibilities. When networked, the Graph can function as a programming terminal for other Power Focus units.

POWER FOCUS 4000

The flexible and competent choice

Spindle synchronization

All Atlas Copco tightening spindles are easily fixtured using our standard range of Express mechanics. The StepSync and SynchroTork tightening strategies give various levels of spindle synchronization during clamp force build-up. Communication between the controllers in the cell or group takes place via the I/O bus. Depending on user-interface preferences and budget, the SyncMaster may be a Compact or Graph hardware unit.

MultiStage functionality reduces relaxation

The inherent “MultiStage” functionality permits the combination of up to eight different parameter sets in a linear sequence. The entire process is activated with just one press of the tool trigger. For joint conditioning, fasteners can be run down to a pre-torque value, backed off by a configurable number of degrees and then re-tightened to the desired final torque. This advanced functionality is ideal for reducing relaxation in a joint.

Cell networking gives process security

The Cell concept allows for Ethernet networking without a PC, and offers overall station process control at a lower cost. A Cell consists of up to 20 units, where the Master controls the process of all Members in the tightening station, and communicates process data as a single interface point.

Tensor spindles are easily fixtured using our standard range of Express mechanics. The control strategies StepSync and synchronize SynchroTork Tensor spindles to provide consistent clamp forces over the entire component mating face.

Advanced statistics for better quality control

Data is continuously collected and analyzed, and can be presented as statistics on, e.g., the Graph color display. Diagnostics and statistical alarms such as SPC monitor charts, and capability (Cpk) alarms highlight changes and trends in the assembly process. Effective information and SPC are good motivators, and encourage operators to adopt a proactive approach to monitoring the quality of the assembly process.

CONTROLLER SOFTWARE

Functionality

The Power Focus can be more or less advanced, depending on the hardware key – the RBU (rapid backup unit). This patented device opens up only the needed functionality, which allows for tailoring the system to your requirements. This saves money at purchasing and makes system upgrading very simple. There are five RBU levels – Gold, Silver, Bronze, DS and X – giving different controller functionality when connected.

DS

- Stand alone functionality:
- DS tools only
- 64 PSETs
- Integrated Ethernet
- OK/NOK reporting
- Job functionality
- MultiStage functionality
- Cell functionality
- Fieldbus option
- Logic Configurator

Bronze

- Stand alone functionality:
- 64 PSETs
- Autoset
- Batch count

Silver

- All the functionality of the bronze plus:
- 250 PSETs
- Integrated Ethernet
- Job and Cell operation
- MultiStage functionality
- SPC
- Fieldbus options
- Logic Configurator

Gold

- All the functionality of the silver plus:
- Advanced line control (Cell Job)
- Synchronisation in a cell
- Running ETX spindles
- Yield control

RBU-X

- Running ETX spindles
- Does not run Tensor tools
- All the functionality of the gold

POWER FOCUS
Communication made simple

Integrated ways to communicate

Cell level
The cell is a key concept in the system design. It is a cluster of max 20 controllers networked together via built-in Ethernet TCP/IP. No need for use of a PC.

Factory level
Power Focus can be integrated with the factory Ethernet network which enables easy access and reporting anywhere in the plant.

Internet level
World wide communication is a matter of giving access through a factory network gateway to Power Focus.

Controller level
Realtime communication over I/O bus independent of the factory net.

Fieldbus level
The common industry field buses are supported, for example Profibus, Ethernet IP and FL-Net.

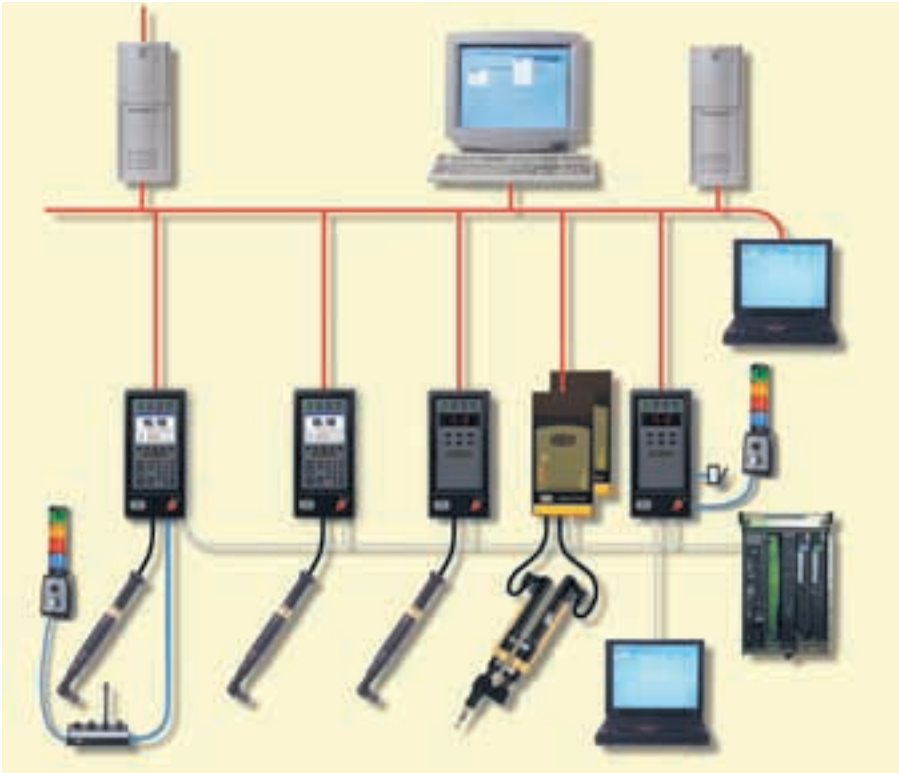

Discrete I/O, I/O bus, Fieldbus, Compact, Graph, PC, access router, host database.

TOOLSTALK

Software for programming and analysis

ToolsTalk DS/DL

The PC software ToolsTalk DS/DL allows for complete programming of your DS/DL Drive. There are three programming levels: AutoSet (sets target torque), QuickProg (sets target torque and joint hardness) and Full Programming. Connect your PC to the drive via the serial RS232 port, open the ToolsTalk DS/DL software application and you are talking to the drive. As simple as that. Programming structure is intuitive, logical and easy to follow.

ToolsTalk PF

With Tools Talk PF, you have the ultimate tool for communicating with your Power Focus tool controller. This user-friendly PC software makes programming and process analysis of a tightening station very simple. All-in-one, not only tightening parameters, but also fieldbus and Logic Configurator set-up, as well as customized reporting and presentation of statistics. With a simple click, results can be exported into other commercial file formats.

ToolsTalk PF communicates with the Power Focus over Ethernet, USB or serial RS232. If you are networking from your office desk, ToolsTalk PF allows for quickest access to the different control units connected.

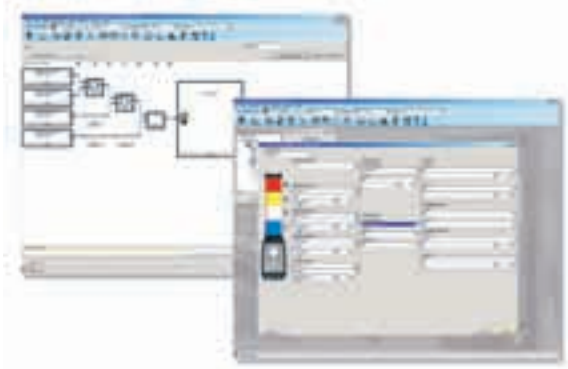

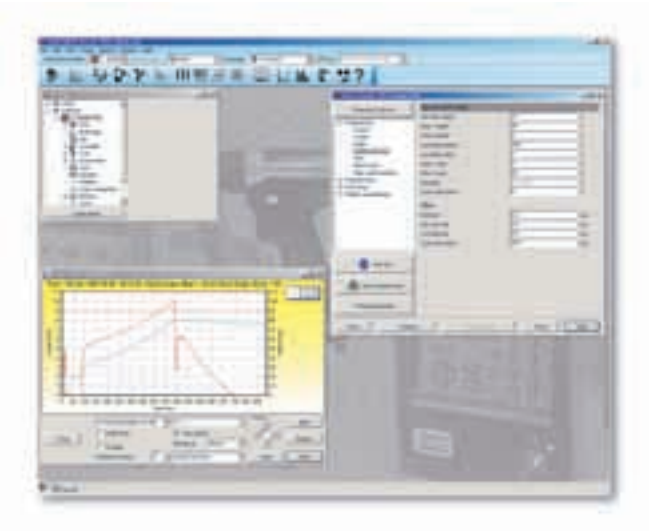

POWER FOCUS

Data collection and process improvement software

ToolsNet – process improvement

ToolsNet is a data collection and process improvement software application for use with Power Focus and PowerMACS control systems. Combined, these products provide total control of the assembly process, providing a platform for quality improvements. Historical data, statistics and capability indexes can be accessed at any time via a standard web browser such as MS Explorer. ToolsNet is the complete assembly process improvement tool.

Traceability minimizes recall costs

The production can be followed in real-time or monitored through different reports such as the Shift report or Product report which provides information on an entire shift or every tightening related to a specified product.

In the event of warranty recalls, the result database provides access to critical information which can easily minimize the extent of any recall leading to an overnight payback on your investment.

Event Monitor – events in real time

Integrate the Event Monitor software application within your plant architecture and monitor Power Focus and PowerMACS events remotely, as they occur on the assembly line, in real time.

Event Monitor can immediately alert your office PC if the Cpk on a specific controller has dropped below a specified level, or if a tool at a specific workstation requires preventative maintenance.

Event Monitor is web based. Data can be accessed from anywhere in the plant, using a standard web browser such as MS Explorer.

Program History – Track programming changes

Program history provides traceability of programming changes in the Power Focus Controller.

Any change that may be done locally directly on the controller will be reported to the ToolsNet database. This is also a powerful report to cross check which products were built with which detailed programming.

Factory Overview – visualization

Factory Overview provides real time monitoring and visualization of the production process. Factory Overview is a visual aid that presents the momentary status of the assembly process for a factory, line or workstation in an easy-to-comprehend form, from anywhere in the factory.

This object-orientated concept enables tooling, quality and maintenance engineers to access all plant data in real time. Factory Overview ensures significant performance gains throughout the entire assembly process.

Factory Overview also provides a single portal through which other Atlas Copco software applications, such as ToolsTalk PF, WinTC, ToolsNet and Event Monitor, can be accessed.

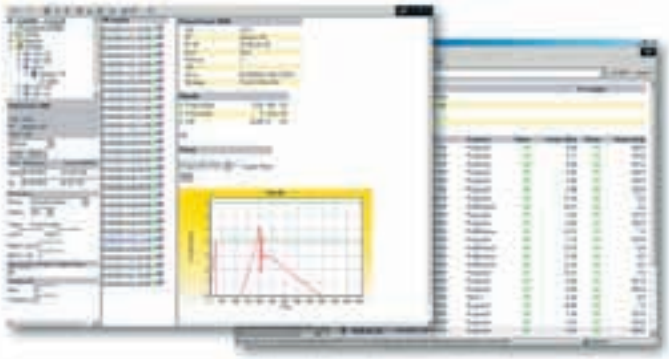

ToolsNet

Event Monitor

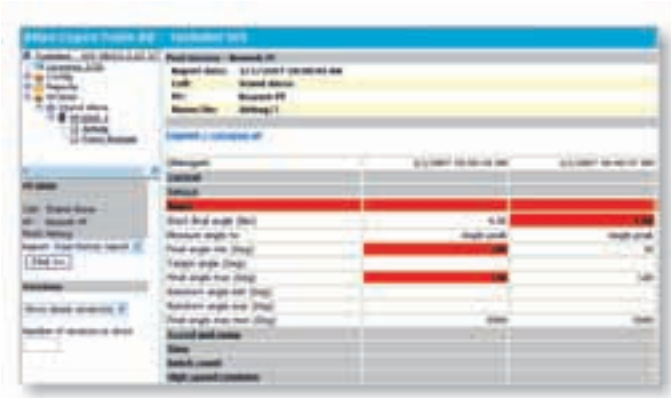

Program History

Factory Overview

POWER FOCUS
Functionality overview

General	DS / DL 300		Power Focus 3100 and 4000			
Functionality Level / RBU Runs Tool Types	Basic DS / DL	Advanced DS / DL	DS DS	Bronze S / ST / SL	Silver DS / S / ST /SL	Gold DS / S / ST / SL
Tensor controllers						
Compact hardware	x	x	x	x	x	x
LED display	x	x	x	x	x	x
6 button keyboard	x	x	x	x	x	x
Graph hardware					x	x
LCD display					x	x
Full keyboard					x	x
Functionality						
Number of tools	1	1	1	1	1	1
Number of Psets	1	10	64	64	250	250
Batch count	x	x	x	x	x	x
Open end spanner	x	x	x	x	x	x
Quick programming	x	x	x	x	x	x
Cross thread / Rehit detection	x	x	x	x	x	x
Tool service indicator	x	x	x	x	x	x
Autoset	x	x	x	x	x	x
Lock on reject	x	x	x	x	x	x
Line control		x	x		x	x
Transducer torque traceability				x	x	x
Tightening status storage			5 000	5 000	5 000	5 000
Tightening data storage				5 000	5 000	5 000
MultiStages			8		8	8
Trace storage				8	8	8
Real time statistics				x	x	x
SPC				x	x	x
RBU			x	x	x	x
Bar code reading			x		x	x
ID input to select Pset			x		x	x
Job function			x		x	x
Number of jobs			32		99	99
ID input to select job			x		x	x
Logic Configurator (4000 only)			x		x	x
Cell programming			x		x	x
Label printer (via Open protocol)			x		x	x
Cell Job						x
Strategies and options						
Two stage/Quick step/Ergoramp	x	x	x	x	x	x
Torque control and angle monitoring	x	x	x	x	x	x
DS control	x	x	x		x	x
Auto zoom step	x	x	x	x	x	x
CW / CCW operation	x	x	x	x	x	x
Rundown angle monitoring	x	x	x	x	x	x
Self tap / PVT monitoring	x	x	x	x	x	x
Reverse angle		x	x	x	x	x
Rotate spindle		x	x	x	x	x
Click wrench input				x	x	x
Torque and angle control				x	x	x
Yield control (PF 4000 only)						x
Angle control and torque monitoring				x	x	x
StepSync, SynchroTork (PF 4000 only)						x
I/O						
RS232 programming port	x	x	x	x	x	x
USB port (PF 4000 only)			x	x	x	x
Discrete I/O	x	x	x	x	x	x
Remote start	x	x	x	x	x	x
Socket selector (optional)		x	x	x	x	x
RE Alarm (optional)		x	x	x	x	x
Parallel printer port			x	x	x	x
I/O Expander (optional)			x	x	x	x
Expandable I/O (up to 124 in / 124 out)			x	x	x	x
Operator ID card input			x		x	x
Fieldbus card			Optional		Optional	Optional
RS232 bar code reader port			x		x	x
Easily programmed fieldbus protocol			x		x	x
Ethernet port for remote prog			x		x	x
Ethernet port for data collection			x		x	x
Protocols						
Open protocol serial			x	x	x	x
Open protocol Siemens 3964R serial			x	x	x	x
Open protocol Ethernet			x		x	x
API			x		x	x
Double open protocol sessions			x		x	x

POWER FOCUS
Functionality overview

General	DS / DL 300		Power Focus 3100 and 4000			
Functionality Level / RBU Runs Tool Types	Basic DS / DL	Advanced DS / DL	DS DS	Bronze S / ST / SL	Silver DS / S / ST / SL	Gold DS / S / ST / SL
ToolsTalk PF W07						
ToolsTalk Functionality						
Serial connection	x	x	x	x	x	x
Off line programming	x	x	x	x	x	x
Real time analysis	x	x	x	x	x	x
Tightening database to PC (Excel)			x	x	x	x
Tightening simulation			x	x	x	x
Operator monitor			x	x	x	x
Picture monitor			x	x	x	x
Fieldbus quick set-up			x		x	x
Job monitor			x		x	x
Bar code reader configration			x		x	x
Ethernet connection			x		x	x
Remote programming			x		x	x
View tightening traces				x	x	x
Overlay traces				x	x	x
Logic Configurator (PF 4000 only)			x		x	x
Multiple identifiers					x	x
Tensor ST sound files					x	x
Factory Overview W05						
Factory Overview Functionality						
Visualisation of controllers on line			x		x	x
Real time tightening status			x		x	x
ToolsTalk link / WinTC			x		x	x
Event Monitor link			x		x	x
ToolsNet link			x		x	x
Power Focus idle indicator			x		x	x
Network connection indicator			x		x	x
Event indicator			x		x	x
Real time CPK					x	x
Configurable link navigation			x		x	x
Real time torque and angle information					x	x
Controller compatibility			x		x	x
ToolsNet W05						
ToolsNet Functionality						
Data collection			OK-NOK		x	x
Data evaluation					x	x
Data linked to ID			x		x	x
Date range filtering					x	x
Web browser interface			x		x	x
Client / server solution			x		x	x
Auto uploading of missing data			x		x	x
Oracle / SQL compatibility			x		x	x
Shift reports			x		x	x
Vehicle reports			x		x	x
Full data analysis capablities					x	x
Customised reports			x		x	x
View tightening traces					x	x
Statistical analysis, histograms, SPC					x	x
Station report			x		x	x
Trace analysis/overlay traces			x		x	x
Multiple identifiers			x		x	x
Controller compatibility			x		x	x
Event Monitor W05						
Event Monitor Functionality						
Web browser interface			x		x	x
Real time event monitoring			x		x	x
Configurable event severity			x		x	x
Event grouping functions			x		x	x
Event filtering			x		x	x
Event acknowledgement			x		x	x
Event observation (with comments)			x		x	x
Event history			x		x	x
Controller compatibility			x		x	x

TENSOR MODULARITY

The Tensor family uses a modular concept based on standard hardware and software.

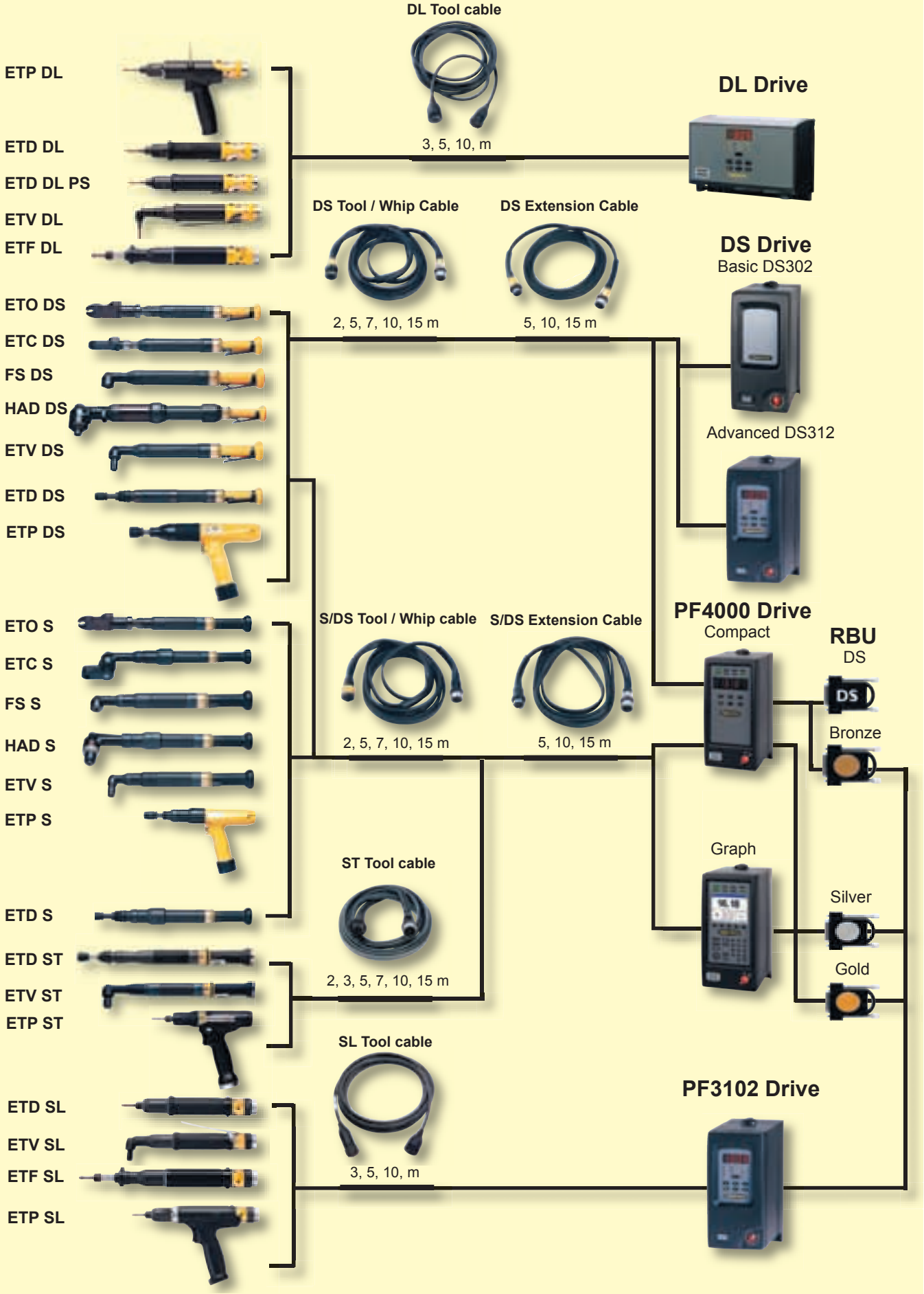

POWER FOCUS
Part numbers and descriptions

Controller hardware

Model	Ordering No.
DL Drive	
D303-DL Basic	8433 4850 48
D313-DL Advanced	8433 4850 33
DS Drive	
D32-DS4 Box	8433 0820 66
D302-DS4 Basic	8433 0820 48
D312-DS4 Advanced	8433 0820 33
D32-DS7 Box	8433 0822 66
D302-DS7 Basic	8433 0822 48
D312-DS7 Advanced	8433 0822 33
D32-DS9 Box	8433 0824 66
D302-DS9 Basic	8433 0824 48
D312-DS9 Advanced	8433 0824 33
Power Focus 3100 Combo W07 Tensor S/DS/ST	
PF 3107-G	8433 7700 00
PF 3107-C	8433 7700 05
PF 3107-G-DN	8433 7740 00
PF 3107-C-DN	8433 7740 05
PF 3107-G-PB	8433 7742 00
PF 3107-C-PB	8433 7742 05
PF 3107-G-IB	8433 7745 00
PF 3107-C-IB	8433 7745 05
PF 3107-G-EIP	8433 7749 00
PF 3107-C-EIP	8433 7749 05
PF 3107-G-MB	8433 7747 00
PF 3107-C-MB	8433 7747 05
PF 3109-G	8433 7900 00
PF 3109-C	8433 7900 05
PF 3109-G-DN	8433 7940 00
PF 3109-C-DN	8433 7940 05
PF 3109-G-PB	8433 7942 00
PF 3109-C-PB	8433 7942 05
PF 3109-G-IB	8433 7945 00
PF 3109-C-IB	8433 7945 05
PF 3109-G-EIP	8433 7949 00
PF 3109-C-EIP	8433 7949 05
PF 3109-G-MB	8433 7947 00
PF 3109-C-MB	8433 7947 05
Power Focus 3100 Combo W05 Tensor SL	
PF 3102-C	8433 2200 05
PF 3102-C-DN	8433 2240 05
PF 3102-C-PB	8433 2242 05
PF 3102-C-IB	8433 2245 05
PF 3102-C-EIP	8433 2249 05
Tensor S/DS/ST	
PF 3107-G	8433 5700 00
PF 3107-C	8433 5700 05
PF 3107-G-DN	8433 5740 00
PF 3107-C-DN	8433 5740 05
PF 3107-G-PB	8433 5742 00
PF 3107-C-PB	8433 5742 05
PF 3107-G-IB	8433 5745 00
PF 3107-C-IB	8433 5745 05
PF 3107-G-EIP	8433 5749 00
PF 3107-C-EIP	8433 5749 05
PF 3107-G-MB	8433 5747 00
PF 3107-C-MB	8433 5747 05
PF 3109-G	8433 5900 00
PF 3109-C	8433 5900 05
PF 3109-G-DN	8433 5940 00
PF 3109-C-DN	8433 5940 05
PF 3109-G-PB	8433 5942 00
PF 3109-C-PB	8433 5942 05
PF 3109-G-IB	8433 5945 00
PF 3109-C-IB	8433 5945 05
PF 3109-G-EIP	8433 5949 00
PF 3109-C-EIP	8433 5949 05
PF 3109-G-MB	8433 5947 00
PF 3109-C-MB	8433 5947 05

Controller functionality

Hardware key	Ordering No.
RBU-Bronze	8433 0010 10
RBU-Silver	8433 0015 20
RBU-Gold	8433 0020 20
RBU-DS	8433 0005 10
RBU-X	8433 0080 20
Power Focus 4000 W07 Tensor S/DS/ST	
PF 4000-G	8433 6100 00
PF 4000-C	8433 6100 05
PF 4000-G-DN	8433 6140 00
PF 4000-C-DN	8433 6140 05
PF 4000-C-FLN	8433 6141 05
PF 4000-G-PB	8433 6142 00
PF 4000-C-PB	8433 6142 05
PF 4000-G-IB	8433 6145 00
PF 4000-C-IB	8433 6145 05
PF 4000-G-MB	8433 6147 00
PF 4000-C-MB	8433 6147 05
PF 4000-G-EIP	8433 6149 00
PF 4000-C-EIP	8433 6149 05

DS Box

DL Drive

Power Focus 4000 Graph

Power Focus 4000 Compact

TENSOR
Software

Quality Integrated Fastening

Software		Ordering No.
ToolsNet W05		
5	Spindle license	8092 1166 05
10	Spindle license	8092 1166 10
25	Spindle license	8092 1166 25
50	Spindle license	8092 1166 50
75	Spindle license	8092 1166 75
125	Spindle license	8092 1166 80
200	Spindle license	8092 1166 85
350	Spindle license	8092 1166 90
500	Spindle license	8092 1166 95
Factory Overview W05		
5	Spindle license	8092 1168 05
10	Spindle license	8092 1168 10
25	Spindle license	8092 1168 25
50	Spindle license	8092 1168 50
75	Spindle license	8092 1168 75
125	Spindle license	8092 1168 80
200	Spindle license	8092 1168 85
350	Spindle license	8092 1168 90
500	Spindle license	8092 1168 95
Event Monitor W05		
5	Spindle license	8092 1167 05
10	Spindle license	8092 1167 10
25	Spindle license	8092 1167 25
50	Spindle license	8092 1167 50
75	Spindle license	8092 1167 75
125	Spindle license	8092 1167 80
200	Spindle license	8092 1167 85
350	Spindle license	8092 1167 90
500	Spindle license	8092 1167 95

Program History W05

Model		Ordering No.
10	Spindle license	8092 1175 10
25	Spindle license	8092 1175 25
50	Spindle license	8092 1175 50
125	Spindle license	8092 1175 80
200	Spindle license	8092 1175 85
350	Spindle license	8092 1175 90
500	Spindle license	8092 1175 95

Tensor software modules

Model	Ordering No.
ToolsTalk DS/DL	
Swedish	8092 1138 60
English	8092 1138 62
German	8092 1138 64
French	8092 1138 66
Spanish	8092 1138 68
Italian	8092 1138 70
ToolsTalk PF W05	
1-user license	8092 1165 01
5-user license	8092 1165 05
10-user license	8092 1165 10
Plant license	8092 1165 99
W03 (upgrade)	
1-user license	8092 1165 31
5-user license	8092 1165 35
10-user license	8092 1165 40
Plant license	8092 1165 49
ToolsTalk PF W07	
1-user license	8092 1183 01
5-user license	8092 1183 05
10-user license	8092 1183 10
Plant license	8092 1183 99
W05 (upgrade)	
1-user license	8092 1183 31
5-user license	8092 1183 35
10-user license	8092 1183 40
Plant license	8092 1183 49
W03 (upgrade)	
1-user license	8092 1183 51
5-user license	8092 1183 55
10-user license	8092 1183 60
Plant license	8092 1183 69
Power Focus controller software	
PF World 05 sticker (12 package)	4222 0820 15
PF World 07 sticker (12 package)	4222 0820 20

Manuals

Model	Ordering No.
Power Focus software W05	
English	9836 1648 01
Swedish	9836 1648 02
French	9836 1648 03
German	9836 1648 04
Spanish	9836 1648 05
Portugese	9836 1648 06
Italian	9836 1648 07
Power Focus software W07	
English	9836 3123 01
Swedish	9836 3123 02
French	9836 3123 03
German	9836 3123 04
Spanish	9836 3123 05
Portugese	9836 3123 06
Italian	9836 3123 07
DS / DL Drive 300	
English	9836 2050 01
Swedish	9836 2050 02
French	9836 2050 03
German	9836 2050 04
Spanish	9836 2050 05
Portugese	9836 2050 06
Italian	9836 2050 07

Printed manuals must be ordered separately.

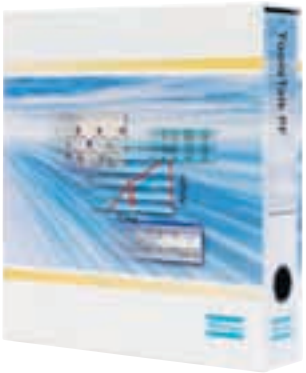

Software

Controller accessories

Model	Ordering No.
Selector 4	8433 0610 04
Selector 8	8433 0610 08
Rotary selector	8433 0606 15
Bit selector	8433 0612 08
Bit selector pad double[a]	4222 0933 92
Bit selector pad single[b]	4222 0933 91
Selector for large sockets	8433 0610 44
RE-Alarm	8433 0560 03
I/O Expander	8433 0564 39
Start handle	4220 1391 91
Accessory cables	
I/O bus cable 0.5 m	4222 0917 00
I/O bus cable 1 m	4222 0917 01
I/O bus cable 3 m	4222 0917 03
I/O bus cable 5 m	4222 0917 05
I/O bus cable 10 m	4222 0917 10
I/O bus cable 15 m	4222 0917 15
I/O Termination plug	4222 0443 00
Cables Ethernet	
Crossed 0.5 m	4222 0682 00
Crossed 1 m	4222 0682 01
Crossed 3 m	4222 0682 03
Crossed 5 m	4222 0682 05
Crossed 10 m	4222 0682 10
Crossed 15 m	4222 0682 15
Crossed 25 m	4222 0682 25
Crossed 50 m	4222 0682 50
Straight 0.5 m	4222 0754 00
Straight 1 m	4222 0754 01
Straight 3 m	4222 0754 03
Straight 5 m	4222 0754 05
Straight 10 m	4222 0754 10
Straight 15 m	4222 0754 15
Straight 25 m	4222 0754 25
Straight 50 m	4222 0754 50

[a] Only compatible with Bit selector.
[b] Only compatible with Socket selector 4 and 8.

RE-Alarm

I/O Expansion box

Selector 8

Bit selector

Selector for large sockets

Start handle

ComNode

Model	Ordering No.
ComNode	8433 2710 00
ComNode Touch Screen	8433 2710 10
ComNode with I/O card	8433 2710 03
ComNode Touch with I/O card	8433 2710 13
ComNode with ToolsNet, Factory Overview and Event Monitor, 10 user	8433 2710 01
ComNode Touch with ToolsNet, Factory Overview and Event Monitor, 10 user	8433 2710 11

Operator Panel advanced

Stacklight

Operator panel

Model	Ordering No.
Operator Panel advanced	8433 0565 00
Operator Panel basic	8433 0565 10

Stacklight

Model	Ordering No.
Stacklight ESL-04 standard	8433 0570 13

ComNode

ComNode Touch Screen

TENSOR
Cables

Tensor ST

Model	Ordering No.
Tool cable	
2 m	4220 2636 02
3 m	4220 2636 03
5 m	4220 2636 05
7 m	4220 2636 07
10 m	4220 2636 10
15 m	4220 2636 15
Spiral cable (length/stretched length)	
3 m / 4 m	4220 2757 03
7 m / 8 m	4220 2757 07
10 m / 12 m	4220 2757 10
Cable protection	4220 2977 90

ST Cable

ST Spiral cable

ST Cable protection

Tensor S

Model	Ordering No.
Tool cable flat	
2 m	4220 3606 02
3 m	4220 3606 03
5 m	4220 3606 05
7 m	4220 3606 07
10 m	4220 3606 10
15 m	4220 3606 15
Cables with 90 degrees connector	
5 m	4220 1560 05
10 m	4220 1560 10
15 m	4220 1560 15
Cable with loop for high flexibility	
5 m	4220 1845 05
10 m	4220 1845 10
15 m	4220 1845 15
Extension cable	
5 m	4220 1007 05
10 m	4220 1007 10
15 m	4220 1007 15
Extension cables for fixtured applications	
5 m	4220 1563 05
10 m	4220 1563 10
15 m	4220 1563 15

S Cable with 90 degrees connector

S Cable with loop

S Cable flat

Tensor SL

Model	Ordering No.
Tool cable	
3 m	4220 3319 03
5 m	4220 3319 05
10 m	4220 3319 10
15 m	4220 3319 15
20 m	4220 3319 20
Heavy duty cable	
3 m	4220 3378 03
5 m	4220 3378 05
10 m	4220 3378 10
15 m	4220 3378 15
20 m	4220 3378 20
Cables with 90 degrees connector	
3 m	4220 3607 03
5 m	4220 3607 05
10 m	4220 3607 10
15 m	4220 3607 15
20 m	4220 3607 20
Spiral cable straight	
5 m	4220 3746 05
Spiral cable with 90 degrees connector	
5 m	4220 3617 05
Extension cable	
3 m	4220 2795 03
5 m	4220 2795 05
10 m	4220 2795 10

SL Cable

SL Cable with 90 degrees connector

SL Spiral cable

TENSOR
Cables

Tensor DS

Model	Ordering No.
Tool cable	
2 m	4220 1616 02
5 m	4220 1616 05
7 m	4220 1616 07
10 m	4220 1616 10
15 m	4220 1616 15
Extension cable	
5 m	4220 2047 05
10 m	4220 2047 10
15 m	4220 2047 15
Extension cables for fixtured applications	
10 m	4220 2046 10
15 m	4220 2046 15

DS Tool cable

DS Extension cable for fixtured applications

Tensor DL

Model	Ordering No.
Tool cable	
3 m	4220 2604 03
5 m	4220 2604 05
10 m	4220 2604 10
15 m	4220 2604 15
20 m	4220 2604 20
Heavy duty cable	
3 m	4220 3265 03
5 m	4220 3265 05
10 m	4220 3265 10
15 m	4220 3265 15
20 m	4220 3265 20
Cables with 90 degrees connector	
3 m	4220 3705 03
5 m	4220 3705 05
10 m	4220 3705 10
15 m	4220 3705 15
20 m	4220 3705 20
Spiral cable straight	
5 m	4220 3240 05
Spiral cable with 90 degrees connector	
5 m	4220 3706 05
Extension cable	
3 m	4220 2795 03
5 m	4220 2795 05
10 m	4220 2795 10

DL Cable

DL spiral cable

DL cable with 90 degrees connector

TENSOR

Accessories for safe and ergonomic operation

Tool extensions

Model	Length	Ordering No.
ETD/ETV/ETF DS4/S4	150	4220 1131 80
ETD DS7/S7 20-30	150	4220 1131 80
ETV DS7/S7 30-50	150	4220 1131 80
ETF DS7/S7 15-40	150	4220 1131 80
ETD/ETV/ETF DS4/S4	100	4220 1131 86
ETD S7 50-120	150	4220 1132 80
ETV S7 70-200	150	4220 1132 80
ETF S7 50-100	150	4220 1132 80
ETD S9 100	150	4220 1132 80
ETV S9 50	150	4220 1132 80
ETF S9 80	150	4220 1132 80
ETD/ETV DS7 70-200	150	4220 1714 80
ETD S9 200	150	4220 1132 81
ETD S9 200	100	4220 1132 82
ETD/ETV DS9/S9 270-370	150	4220 1585 80
ETD DS9/S9 450-600	150	4220 1585 85
ETV ST61/81 100-200	150	4220 2903 81

Tool extension

Supported extensions

Model	Extension	Ordering No.
ETV DS7/S7/ST6/ST8 40-50	142	4220 2209 80
	180	4220 2202 80
ETV DS7/S7/ST6/ST8 40-50	88	4220 2247 80
	226	4220 2203 80

Supported extensions

Reaction plate for fixturing

Model	Ordering No.
ETV ST61/81 40-50	4220 3324 80
ETV ST61/ST81-70	4220 3188 80
ETV ST61/ST81-100	4220 3029 80
ETV ST61/ST81-150-200	4220 1128 85

Reaction plate

Covers for standard sockets

Model	External thread	Ordering No
ETV S7/DS7-70	M 39x1	4220 1993 03
ETV S7/DS7-40-50	M 34x0.75	4220 1995 05
ETD/ETP S7,9/DS7, 9-50-70-90-100-120	M 30x1.5	4220 3251 00
ETD ST61-50-70-90-120	M 30x1.5	4220 3251 00
ETV ST61/81-40-50	M 34x0.75	4220 1995 05
ETV ST61/81-70	M 39x1	4220 1993 03

Cover for standard sockets

Dual trigger for open end

Model	ETV	ETD	Ordering No.
ST61-S	ST31, ST61 28-50	ST31, ST61 15-30	4220 3186 90
ST61-L	ST61 70-200	ST61 50-120	4220 3186 91
ST81-S	ST81 50	ST81 30	4220 3186 92
ST81-L	ST81 70-200	ST81 50-120	4220 3186 93

Lever trigger top

Dual trigger for open end 135 deg.

Model	ETV	ETD	Ordering No.
ST61-S	ST31, ST61 28-50	ST31, ST61 15-30	4220 3311 90
ST61-L	ST61 70-200	ST61 50-120	4220 3311 91
ST81-S	ST81 50	ST81 30	4220 3311 92
ST81-L	ST81 70-200	ST81 50-120	4220 3311 93

Lever trigger 135 deg.

TENSOR

Accessories for safe and ergonomic operation

Support handle for ETP ST

Model	Ordering No.
ETP ST31/32 5-10	4220 3517 80

Support handle

Lever Tensor DS / S / ST

Model	Ordering No.
Lever (DS/S)	4220 1642 80
Lever (ST)	4220 3511 81
Extended lever (DS/S)	4220 1642 85
Extended lever (ST)	4220 3511 85
Safety lever (DS/S)	4220 2356 80

Lever

Safety lever

Lever Tensor DL / SL

Model	Ordering No.
Lever	4220 2540 81
Extended lever	4220 2540 88

Extended lever

Reaction bars and mounting brackets

Number	Spline type	Type	L / W / H	Ordering No.
1	–	Bracket	100/60/8	4220 1029 00
2	Spline type 2	Bracket	70/41/14	4210 2134 02
3		Triangular	73/72/14	4220 2137 02
4		Bar	270/35/14	4220 1903 00
5	Spline type 3	Bracket	100/50/12	4210 2219 03
6		Triangular	82/80/12	4220 2137 03
7		Bar	400/29/12	4210 2219 80
8	Spline type 6	Bracket	200/100/15	4220 1200 00
9		Triangular	112/109/15	4220 2137 06
10		Bar	560/80/15	4220 1200 01
11	Spline type 7	Bracket	250/150/20	4220 1445 00
12	Spline type 8	Bracket	250/160/20	4220 1972 00
13	–	Bracket	100/60/8	4220 1029 01
14	–	Bracket	100/60/8	4220 1029 02
For model				
ETD ST10 120		Bracket	150/100/16	4220 3677 00
ETD ST10 200/300/500		Bracket	200/150/16	4220 3677 01
ETD ST10 750/1000		Bracket	200/150/20	4220 3677 02

Mounting bracket is included for some tool models.
Please match the number from the table with the tool tables.

Reaction bar

Mounting bracket

Triangular

Suspension yokes

Model	Type	Assembly	Ordering No.
ETD/ETV DL/SL 21	Horizontal	Motor	4220 0987 81
ETD/ETV/ETF S4	Fixed	Motor front nut	4220 1675 86
ETD/ETV/ETF S4/S7	Horizontal	Motor	4220 0987 90
ETD/ETV DS4/DS7	Horizontal	Motor	4220 0987 85
ETD/ETV S4/S7/S9/ DS4/DS7/DS9	Vertical	Handle	4220 1417 80
ETD/ETV/ETF S9	Horizontal	Motor	4220 1418 93
ETP S4/S7/DS4/DS7	Horizontal	Motor	4220 1154 90
ETV/ETD ST31/61	Horizontal	Motor	4220 2657 90
ETV/ETD ST31/61	Fixed	Motor	4220 2843 92
ETV/ETD ST81	Horizontal	Motor	4220 0987 90
ETV/ETD ST81	Fixed	Motor	4220 2843 91
ETV/ETD ST31/61	Vertical	Handle	4220 1417 85

Suspension yokes

TENSOR
Tool accessories

Fixtured extensions

Model	Length	For ext + nut Ordering No.	For nut only Ordering No.
ETV S4/S7 10-50	74	4220 2579 90	4220 0841 01
ETV DS4/DS7 10-50			4220 1640 01
ETV S7/S9 70-200	73	4220 2469 90	4220 0848 01
ETV DS7/DS9 70-200			4220 1663 01
ETV S9/DS9 270-600	91	4220 2614 90	Included
ETV ST10 180	102.5	4220 3571 90	Included
ETV ST10 270/370	126.4	4220 3573 90	Included

Fixtured extension

Protective cover Tensor DS / S

Model	Ordering No
ETV DS4/S4, DS7/S7 28-30	9040 0900 08
ETV S7 40-50	9040 0900 09
ETV S7 70-100	9040 0900 10
ETV S7/DS7/DS9 120-200, S9 100-200	9040 0900 11
ETV DS7 40-50	9040 0900 33
ETV DS7 70-100	9040 0900 34
ETP S4/DS4 10	9040 0900 12
ETP S42/DS42	9040 0900 88
ETP S7/DS7 20-30	9040 0900 12
ETP S7/DS7 50	9040 0900 43

Protective cover Tensor DS/S

Protective cover Tensor ST

Model	Ordering No.
ETV ST31 5-15	4220 2744 05
ETV ST31/ST61 28-30	4220 2744 03
ETV ST61 40-50/ST81 50	4220 2744 02
ETV ST61 70/ST81 70	4220 2744 04
ETP ST31-05	4220 2744 06
ETP ST31-10	4220 2744 07

Protective cover Tensor ST

Pistol grip Tensor DL / SL

Model	Ordering No.
Tensor DL	4220 2743 90
Tensor SL	4220 3516 80

Pistol grip can be mounted on all straight DL tools.

Tensor DL

Torque multiplier (reaction bar included)

Model	Max Torque Nm	Gear ratio	Square in	Square out	Ordering No.
T-Mult 120	30	4.54	3/8	1/2	8431 0453 53
T-Mult 200	50	4.62	3/8	3/4	8433 0310 07
T-Mult 400	100	4.10	1/2	3/4	8431 0493 65
T-Mult 500	30	16.11	3/8	3/4	8433 0310 28
T-Mult 800	45	18.50	1/2	1	8433 0311 81
T-Mult 1000	250	4.00	3/4	1	8433 0312 16
T-Mult 1500	72	21.10	1/2	1	8433 0312 20

T-Mult

Telescopic front parts for ETV with pin retainer

Model	Holder	Front part	Nut	Stroke mm	Square drive in
DS/S 40/50	4220 1673 80	4220 1145 95	4220 0841 01	25	3/8
DS/S 70/100	4220 1811 81	4220 1135 95	4220 0848 01	25	1/2
DS/S 150/200	4220 1592 81	4220 1135 93	4220 0848 01	25	1/2
DS/S 270/370	4220 1960 80	4220 1179 91	Included in front part	40	3/4

Telescopic front part

TENSOR
Tool accessories

Barcode scanner

Model	ETV	ETD	Ordering No.
ST61-S	ST31, ST61 28-50	ST31, ST61 15-30	8433 0615 10
ST61-L	ST61 70-200	ST61 50-120	8433 0615 20
ST81-S	ST81 50	ST81 30	8433 0615 30
ST81-L	ST81 70-200	ST81 50-120	8433 0615 40

Barcode scanner

Parameter set selector

Model	ETV	ETD	Ordering No.
ST61-S	ST31, ST61 28-50	ST31, ST61 15-30	8433 0616 05
ST61-L	ST61 70-200	ST61 50-120	8433 0616 15
ST81-S	ST81 50	ST81 30	8433 0616 25
ST81-L	ST81 70-200	ST81 50-120	8433 0616 35

Parameter set selector

I/O device module

Model	ETV	ETD	Ordering No.
ST61-S	ST31, ST61 28-50	ST31, ST61 15-30	8433 0617 12
ST61-L	ST61 70-200	ST61 50-120	8433 0617 22
ST81-S	ST81 50	ST81 30	8433 0617 32
ST81-L	ST81 70-200	ST81 50-120	8433 0617 42

I/O device module

Protection

Model	Ordering No.
Scanner protection ST61-S	4220 2762 10
Selector protection	4220 2917 06
I/O device protection	4220 2917 06

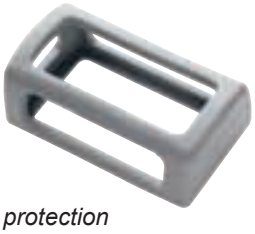

Scanner protection

Front button

Model	ETV	ETD	Ordering No.
ST61-S	ST31, ST61 28-50	ST31, ST61 15-30	4220 3184 90
ST61-L	ST61 70-200	ST61 50-120	4220 3184 91
ST81-S	ST81 50	ST81 30	4220 3184 92
ST81-L	ST81 70-200	ST81 50-120	4220 3184 93

Front button

Adjustable headlights

Model	ETV	ETD	Ordering No.
ST61-S	ST31, ST61 28-50	ST31, ST61 15-30	4220 3292 94
ST61-L	ST61 70-200	ST61 50-120	4220 3292 95
ST81-S	ST81 50	ST81 30	4220 3292 96
ST81-L	ST81 70-200	ST81 50-120	4220 3292 97

Adjustable headlights

Lever trigger top

Model	ETV	ETD	Ordering No.
ST61-S	ST31, ST61 28-50	ST31, ST61 15-30	4220 3186 90
ST61-L	ST61 70-200	ST61 50-120	4220 3186 91
ST81-S	ST81 50	ST81 30	4220 3186 92
ST81-L	ST81 70-200	ST81 50-120	4220 3186 93

Lever trigger top

Lever trigger 135 deg.

Model	ETV	ETD	Ordering No.
ST61-S	ST31, ST61 28-50	ST31, ST61 15-30	4220 3311 90
ST61-L	ST61 70-200	ST61 50-120	4220 3311 91
ST81-S	ST81 50	ST81 30	4220 3311 92
ST81-L	ST81 70-200	ST81 50-120	4220 3311 93

Lever trigger 135 deg.

Tool holder

Model	Ordering No.
ETP ST31, ETP DL	4220 3584 80

Tool holder

MULTIPLES BY EXPRESS

Flexible and powerful

Why waste time and money reinventing the same solution when you can customize your multiples – by Express?

"Express" components are designed and manufactured by Atlas Copco. Our long experience, uncompromising quality and unrivalled R&D resources ensure products that meet the most stringent demands.

Short lead-time – fast response

The unique Express concept permits quotations, complete with specifications and dimensional drawings, in days rather than weeks. The secret is smart modular thinking (Express) and an outstanding logistics network. This means real savings – in time and money.

Stand Alone system – quick, easy and powerful.

Express mechanics

POWER FOCUS
ETX nutrunners and cables

Power Focus with ETX nutrunners

ETX nutrunners are compact, durable and easy to integrate.

Some applications require spindles for fixtures and for durability under extreme conditions. ETX is designed to last in the toughest environments with high duty cycle and high production rate. ETX is controlled by the Power Focus, just like the Tensor S and Tensor ST tools making it a true plug and play system.

Optimized for integration, ETX makes life easy for application engineers. There are optional ways to fixture the front end of the tool. With a sandwich mount, for easy exchange of the socket holder, or pilot mount direct onto the front end. Its compact planetary gear minimizes center-to-center distances, for greater flexibility when placing the spindles in the powerhead. Calibration data, service data, general tool- and transducer data (such as cycles, serial numbers) are all stored on the built-in memory chip.

When matching tool to application, accessibility can pose a real problem. Available in many different mechanical designs (angle tools, u-builds and so on), the ETX range can be the answer to that “impossible” application. Contact your local Atlas Copco representative for further details.

- Compact, easy to integrate and service friendly.
- Built in memory chip.
- Standard torque range 6-950 Nm. Up to 4000 Nm on request.
- Adjustable single connector designed for cable management flexibility.
- Different socket holder lengths (0-200 mm), permit access to applications or parts with tight clearances.
- Spring travel can be increased from the standard 50 mm to 76 or 100 mm, to simplify fastening of longer bolts.
- ISO certified to +/- 2.5% accuracy and 1 million duty cycles on hard and soft joints.
- Low moment of rotor inertia, designed for high dynamic applications.

ETX cables

ETX cables are designed with a robust extruded connector and a super-flex jacket for increased durability.

- Reduce spare parts due to a single cable design.
- Super-flex cables provide increased life.
- Cable lengths in combination up to 25 m.

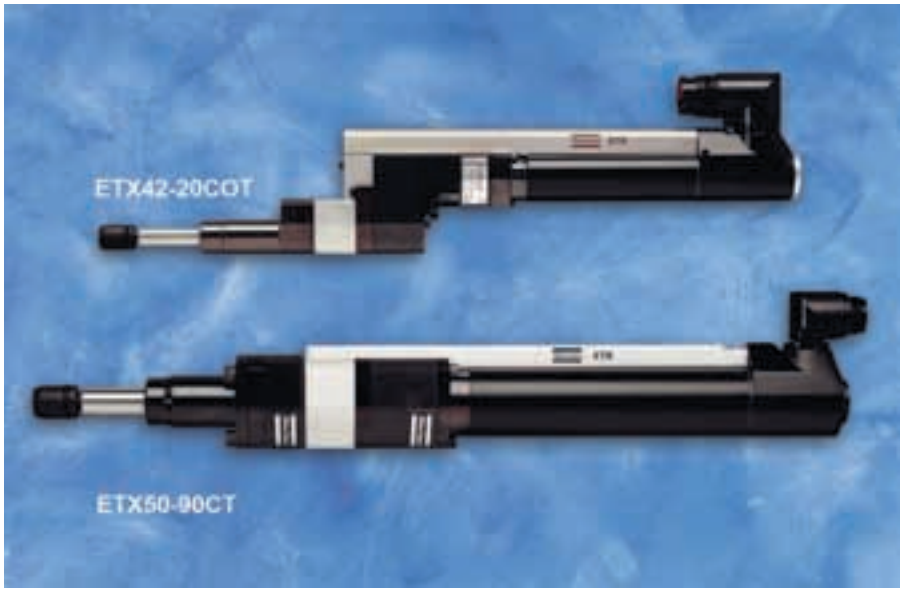

POWER FOCUS

ETX nutrunners and cables

Standard nutrunner

Atlas Copco standard DC electric brushless nutrunners. These state-of-the-art nutrunners are used for a wide variety of fastening tasks.

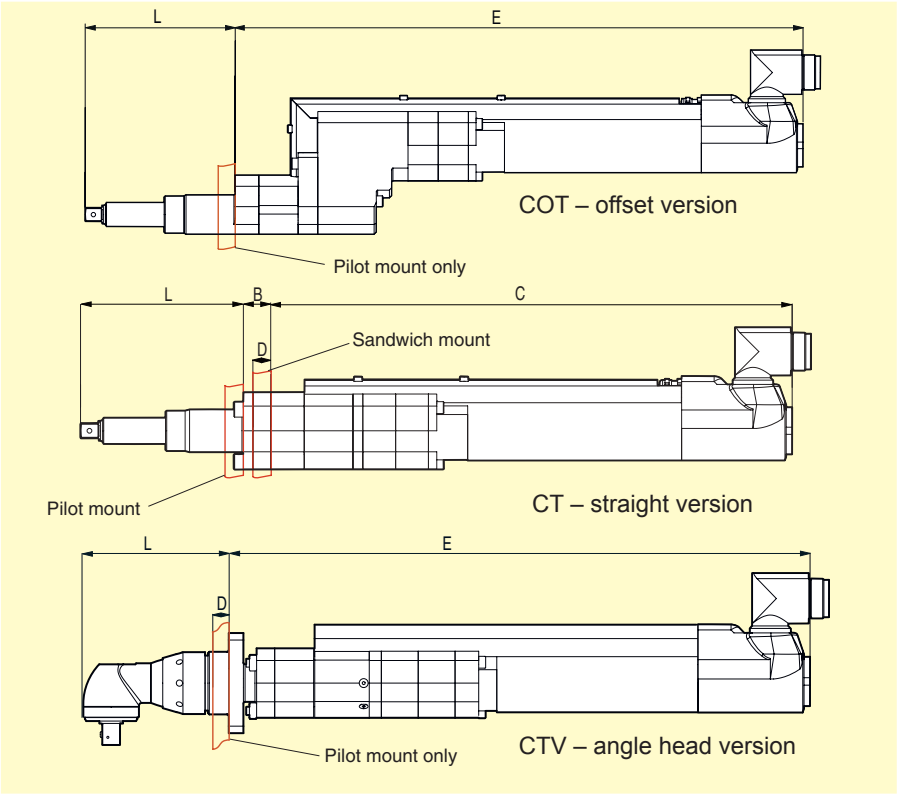

Model	Travel mm	Torque range Nm	Torque range ft lb	Speed r/min	Min C-C	Weight kg	Weight lb	Gear ratio	Socket holder size in	Ordering No.	Socket holder Ordering No.	L mm	B mm	C mm	D mm	E mm
ETX42-20CT	50	6- 20	4 - 14	2000	43	3.2	7.1	7.50	3/8	8435 5120 10	4230 1818 00	134	23	386	15	–
ETX42-20COT	50	6- 20	4 - 14	2000	31	4.3	9.5	7.50	3/8	8435 5120 20	4230 1818 00	134.5	–	–	–	436
ETX42-50CT	50	10- 50	7 - 35	700	43	3.5	7.7	21.33	1/2	8435 5130 10	4230 1819 00	134	23	412	15	–
ETX42-50COT	50	10- 50	7 - 35	700	31	4.6	10.1	21.33	1/2	8435 5130 20	4230 1819 00	134.5	–	–	–	463
ETX50-90CT	50	20- 90	15 - 65	650	51	5.9	13.0	18.21	1/2	8435 5140 10	4230 1820 00	137	23	462	15	–
ETX50-90COT	50	20- 90	15 - 65	650	37	8.1	17.9	18.21	1/2	8435 5140 20	4230 1820 00	137	–	–	–	519
ETX50-150CT	50	30- 150	22 - 110	380	51	5.8	12.8	31.24	1/2	8435 5150 10	4230 1820 00	137	23	462	15	–
ETX50-150COT	50	30- 150	22 - 110	380	37	8.0	17.6	31.24	1/2	8435 5150 20	4230 1820 00	137	–	–	–	519
ETX62-150CT	50	30- 150	22 - 110	450	63	9.5	20.9	13.94	1/2	8435 5160 10	4230 1829 00	152	25	531	15	–
ETX62-150COT	50	30- 150	22 - 110	450	46	9.5	20.9	13.94	1/2	8435 5160 20	4230 1829 00	152.5	–	–	–	575
ETX62-230CT	50	40- 230	29 - 170	330	63	10.2	22.5	19.04	3/4	8435 5170 10	4230 1822 00	152	25	531	15	–
ETX62-230COT	50	40- 220	29 - 162	330	46	12.8	28.2	19.04	3/4	8435 5170 20	4230 1822 00	152.5	–	–	–	575
ETX62-350CT	50	50- 350	37 - 258	220	63	10.2	22.5	28.33	3/4	8435 5180 10	4230 1822 00	152	25	531	15	–
ETX62-350COT	50	50- 330	37 - 243	220	50	12.9	28.4	28.33	3/4	8435 5180 20	4230 1822 00	152	–	–	–	580.5
ETX72-450CT	50	90- 450	65 - 331	160	73	11.3	25	41.6	3/4	8435 5182 10	4230 1971 00	146	30	610.5	20	–
ETX72-600CT	50	120- 600	90 - 441	110	73	11.3	25	58.0	3/4	8435 5183 10	4230 1971 00	146	30	610.5	20	–
ETX72-600COT	50	120- 580	90 - 425	110	55	17	37.5	57.99	3/4	8435 5183 20	4230 1971 00	146	–	–	–	672
ETX90-750CT	50	150- 750	110 - 551	90	91	17.8	39	68.3	1	8435 5184 10	4230 1824 00	152	32	581.5	20	–
ETX90-950CT	50	200- 950	150 - 699	70	91	17.8	39	90.0	1	8435 5185 10	4230 1824 00	152	32	581.5	20	–
Angle head tools																
ETX42-70CTV	–	15- 70	11 - 50	355	45	4.9	10.8	21.33	1/2	8435 4072 07	–	85	-	-	15	422
ETX50-170CTV	–	22- 170	16 - 125	200	50	9.1	20	31.24	1/2	8435 4073 04	–	133	-	-	15	479
ETX62-350CTV	–	50- 350	37 - 221	175	70	13.9	28.9	19.04	3/4	8435 4074 72	–	153	-	-	14	553

Cables

Model	Ordering No.
Tool cables	
2 m	4230 2195 02
5 m	4230 2195 05
7 m	4230 2195 07
10 m	4230 2195 10
15 m	4230 2195 15
20 m	4230 2195 20
ETX Extension cables	
5 m	4220 1563 05
10 m	4220 1563 10
15 m	4220 1563 15

ETX extension cables are the same as for Tensor S.

RBU

	Ordering No.
RBU-X	8433 0080 20
RBU-Gold	8433 0020 20

POWER FOCUS
ETX nutrunners

Atlas Copco special socket holder designs allow you to reach into applications or parts with tight clearances.

ETX42-20CT

A mm	Product No.	Socket holder size in	Socket holder[a] Ordering No.
0[b]	8435 5120 10	3/8	4230 1818 00
50	8435 4063 08	3/8	4230 2217 00
100	8435 4063 10	3/8	4230 2217 01
150	8435 4063 12	3/8	4230 2217 02
200	8435 4063 14	3/8	4230 2217 03

ETX42-50CT

A mm	Product No.	Socket holder size in	Socket holder[a] Ordering No.
0[b]	8435 5130 10	1/2	4230 1819 00
50	8435 4063 19	1/2	4230 2218 00
100	8435 4063 21	1/2	4230 2218 01
150	8435 4063 23	1/2	4230 2218 02
200	8435 4063 25	1/2	4230 2218 03

ETX50-90CT

A mm	Product No.	Socket holder size in	Socket holder[a] Ordering No.
0[b]	8435 5140 10	1/2	4230 1820 00
50	8435 4063 28	1/2	4230 2219 00
100	8435 4063 29	1/2	4230 2219 01
150	8435 4063 30	1/2	4230 2219 02
200	8435 4063 31	1/2	4230 2219 03

ETX50-150CT

A mm	Product No.	Socket holder size in	Socket holder[a] Ordering No.
0[b]	8435 5150 10	1/2	4230 1820 00
50	8435 4063 68	1/2	4230 2219 00
100	8435 4063 33	1/2	4230 2219 01
150	8435 4063 34	1/2	4230 2219 02
200	8435 4063 35	1/2	4230 2219 03

ETX62-150CT

A mm	Product No.	Socket holder size in	Socket holder[a] Ordering No.
0[b]	8435 5160 10	1/2	4230 1829 00
50	8435 4063 37	1/2	4230 2223 00
100	8435 4063 40	1/2	4230 2223 01
150	8435 4063 43	1/2	4230 2223 02
200	8435 4063 46	1/2	4230 2223 03
0	8435 4063 70	5/8	4230 1821 00
50	8435 4063 38	5/8	4230 2224 00
100	8435 4063 41	5/8	4230 2224 01
150	8435 4063 44	5/8	4230 2224 02
200	8435 4063 47	5/8	4230 2224 03

ETX62-230CT

A mm	Product No.	Socket holder size in	Socket holder[a] Ordering No.
0	8435 4063 81	5/8	4230 1821 00
50	8435 4063 83	5/8	4230 2224 00
100	8435 4063 98	5/8	4230 2224 01
150	8435 4063 88	5/8	4230 2224 02
200	8435 4063 91	5/8	4230 2224 03
0[b]	8435 5170 10	3/4	4230 1822 00
50	8435 4063 84	3/4	4230 2226 00
100	8435 4063 86	3/4	4230 2226 01
150	8435 4063 89	3/4	4230 2226 02
200	8435 4063 92	3/4	4230 2226 03

ETX62-350CT

A mm	Product No.	Socket holder size in	Socket holder[a] Ordering No.
0	8435 4063 72	5/8	4230 1821 00
50	8435 4063 53	5/8	4230 2224 00
100	8435 4063 56	5/8	4230 2224 01
150	8435 4063 59	5/8	4230 2224 02
200	8435 4063 62	5/8	4230 2224 03
0[b]	8435 5180 10	3/4	4230 1822 00
50	8435 4063 54	3/4	4230 2226 00
100	8435 4063 57	3/4	4230 2226 01
150	8435 4063 60	3/4	4230 2226 02
200	8435 4063 63	3/4	4230 2226 03

[a] This socket holder is included when you order the complete spindle.
[b] This socket holder follows when you order the standard nutrunner.
NOTE: The spindle travel is 50 mm for all sockets holders.

POWER MACS 4000

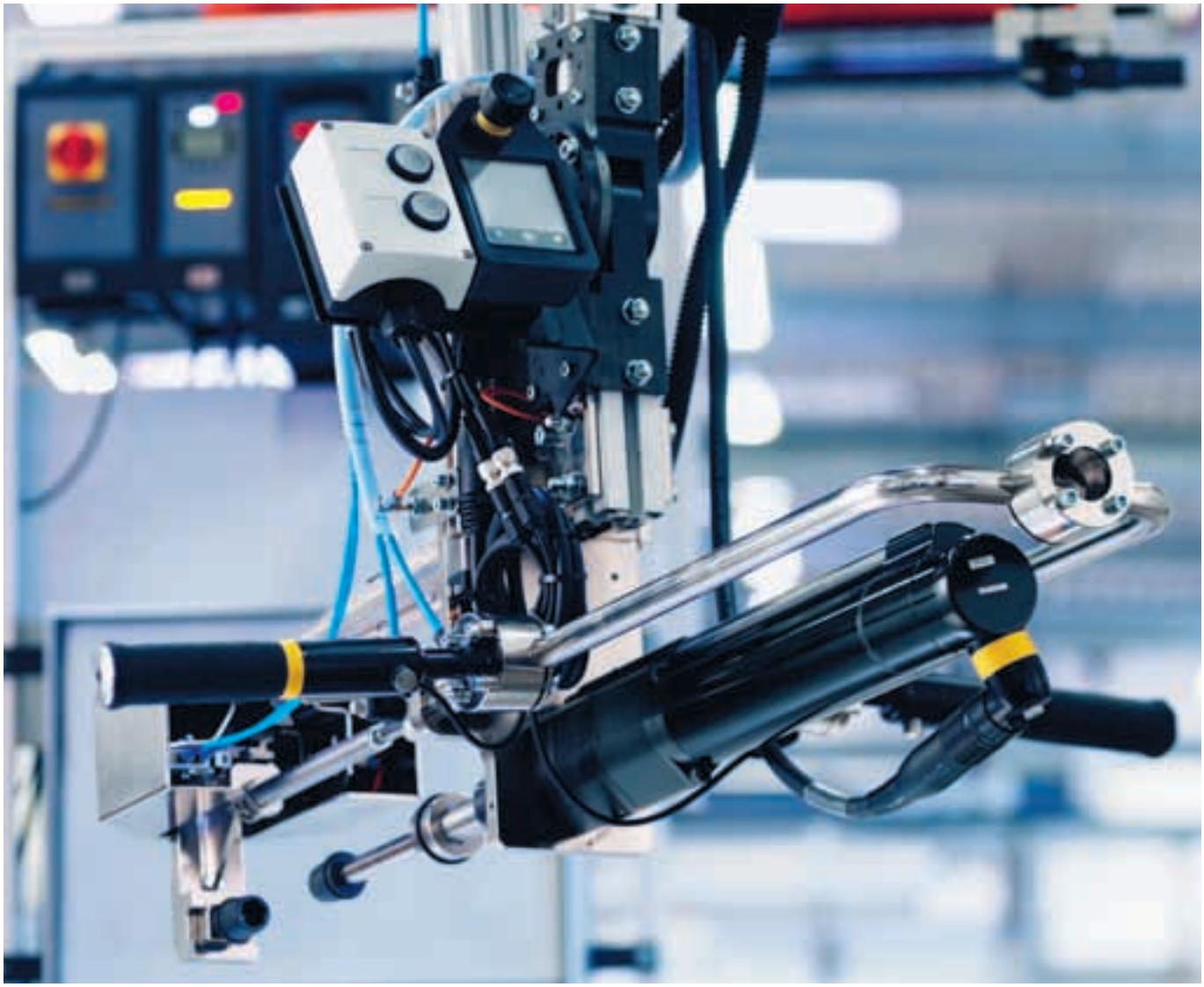

Power MACS 4000 / QST
State-of-the-art control and class-leading functionality; a good way to begin any fastening cycle, but it's only the start. The new Atlas Copco Power MACS 4000 tightening controller represents the pinnacle of fixtured fastening control and a new generation of upgradeable controllers. Intuitive monitoring and communication capabilities combined with advanced management programs allow processes to be fine-tuned and productivity hurdles to be overcome. Based on its successful predecessor Power MACS and QMX, the Power MACS 4000 tightening controller and the QST spindle have been developed with one overriding goal in mind: To get the production line in the fast lane, and keep it there.

- **Outstanding nutrunner speeds** – The new QST nutrunner is up to 67% faster than the QMX-nutrunners while delivering the same superior accuracy and durability.
- **Easy programming** – The all-new ToolsTalk Power MACS allows easy programming of advanced flexible tightening strategies via simple and intuitive menus.
- **Correct residual clamp force** – With unique torque recovery strategy, DynaTork™, patented by Atlas Copco. Delivers optimized fastening through improved clamp loading.
- **Designed for error-free setup** – The "Intelligent Chip" in the QST spindle provides both spindle and calibration parameters to assure error-free setup. Digital communications allow for extended cable length and higher reliability.
- **Modular plug-and-play** – System requires no cabinet and therefore less space. Standardized components increase lifetime and reduce maintenance and spare part costs.
- **Maximize uptime** – Heavy duty controller design and nutrunners with highest durability and accuracy. More than one million cycles between preventive maintenance reduces maintenance and downtime costs.

POWER MACS 4000

Power MACS 4000
Power MACS 4000 has effective tools for statistical process control to ensure that quality issues are identified long before they cause production problems. The controller supports a zero- fault production philosophy with its capacity to collect tightening data for analysis, continuous improvement and traceability. Power MACS processing power and memory are designed to handle and send large amounts of data without influencing the tightening process.

With the Power MACS 4000 you can easily define your tightening strategy based on results to make sure valuable time and resources are not wasted. Reject Management can easily be set to fulfil your requirements to handle faulty tightening in the most efficient way.

Power MACS 4000 library has a wealth of tested tightening strategies so now every joint can be tightened in the best possible way in terms of cycle time and quality.

- Stand alone design – Eliminates the need of bulky cabinets and expensive air conditioners.
- Informative HMI – Indicator lamps showing ALL OK, OK, NOK tightenings plus Alarms and E-stop. The new high contrast display shows error messages in written text, cycle data, software version, IP address etc.
- New servo – Runs the entire spindle range independent of size and torque; reduces the number of spare parts.
- Integrated 24V DC supply – For external use provided by each TC.
- Integrated Anybus slot – Field bus flexibility (option for primary controller).
- Opto isolated Digital in/out puts – 4 inputs, 4 outputs.
- Optimized communication – Only one IP address needed per system.
- Automatic backup – Parameters and settings are backed up by the system and automatically downloaded to the replacing controller.
- Integrated line filter.
- Integrated PLC.

Power MACS 4000 controllers

Model	Fieldbus version	Ordering No.
Primary controller		
TC-4000-P-ES	No Fieldbus	8435 6511 00
TC-4000-P-PB-ES	Profibus	8435 6511 10
TC-4000-P-DN-ES	DeviceNet	8435 6511 30
TC-4000-P-EIP-ES	Ethernet IP	8435 6511 60
TC-4000-P-MTCP-ES	ModBus TCP	8435 6511 70
TC-4000-P-PN-ES	Profit Net	8435 6511 50
Secondary controller		
TC-4000-S	No fieldbus, No Ethernet switch	8435 6500 00
TC-4000-S-ES	No fieldbus, Ethernet switch	8435 6501 00

POWER MACS 4000

Power distribution and software

Main Switch Box – MSB

The MSB is used for power distribution and makes power management easy. It is designed be fed with 400-480 V AC 3-phase without requiring an external transformer. The MSB leaves room for customer adaptations and the E-stop functionality can be upgraded from class 3 to class 4. Each MSB supplies up to 6 controllers with power.

Distribution Box – DB

The DB provides the same functionality as the MSB except for the main switch and is used as a complement to the MSB for systems with more than 6 channels.

General Box – GB

An empty DB, suitable for external system devices.

Software

ToolsTalk Power MACS World Release 7

The new ToolsTalk software for Power MACS 4000 has been developed with user friendliness and customer adaptation in mind. This Window-based program can be installed on a station PC, a laptop or a back office PC. ToolsTalk supports off-line programming; to edit or upload programs, simply connect the PC to the Power MACS 4000 controller using an Ethernet cable.

- New user friendly Windows programming interface with “drag-and-drop” and “copy-paste” functionalities.
- 10 levels of read and write security.
- Trace reporting on torque, angle, current, current as torque and time.
- Improved read-at-a-glance graphics with actual pictures of customer parts.
- Possible to view up to 20 tightening traces simultaneously.
- Graphical system map of hardware and software.
- Configurable cycle data menu for station reporting.
- Real time SPC and TDA reporting.
- Event logging of security access, parameter changes, errors, faults, alarms and warnings.
- Maintenance menus to verify hardware and software changes without machine intervention.
- Run the program in Basic or Advanced mode depending on needs.
- New Quick-set functionality for trimming a process in seconds.
- Optimize each tightening by means of the execution path for each bolt, including start times, stop times, and execution times for the steps.

Model	Ordering No.
MSB	
Main switch box (Max 6 channels)	8435 5660 00
DB	
Distribution box (Max 6 channels) + Power cable 1800 mm	8435 6560 50
GB	
General box	4222 1249 85

Software ToolsTalk Power MACS World Release 7

	Designation	Ordering No.
1 user	English	8092130701
5 user	English	8092130705
10 user	English	8092130710
Plant license	English	8092130797
1 user	German	8092130711
5 user	German	8092130715
10 user	German	8092130720
Plant license	German	8092130798
1 user	French	8092130721
5 user	French	8092130725
10 user	French	8092130730
Plant license	French	8092130799

POWER MACS 4000

QST nutrunners and cables

QST nutrunners

QST nutrunners are the latest addition to Atlas Copco's range of fixtured spindles. Our vast experience combined with the latest technology is the simple answer to why the QST is our fixtured flagship. Outstanding speed characteristics with retained accuracy, high durability and increased up-time embodied in a robust design make the QST well prepared for the markets toughest demands.

QST is easy to integrate in fixtures such as the Express mechanics since it has the same footprint as QMX and ETX and the possibility to both pilot and sandwich mount.

- Torque range from 6-4000 Nm.
- MTBF higher than 5 million cycles, under normal conditions.
- Cable connector is adjustable in two degrees of freedom for optimal cable management.
- ISO certified to +/- 2.5% accuracy and 1 million duty cycles on hard and soft joints.
- Excellent nutrunner C-C distances.
- Low moment of inertia, designed for high dynamic applications.
- Hot Swap – replace cable or spindle without turning turning off the power.
- Digital communication between spindle and TC – allows spindle calibration to be independent of cable length, reducing the need for a system calibration.
- The QST motor is based on the proven success of its predecessors and up to 67% improved speed characteristics.
- Electronic chip stores data including calibration value, serial numbers and maintenance intervals – reducing costs and errors.

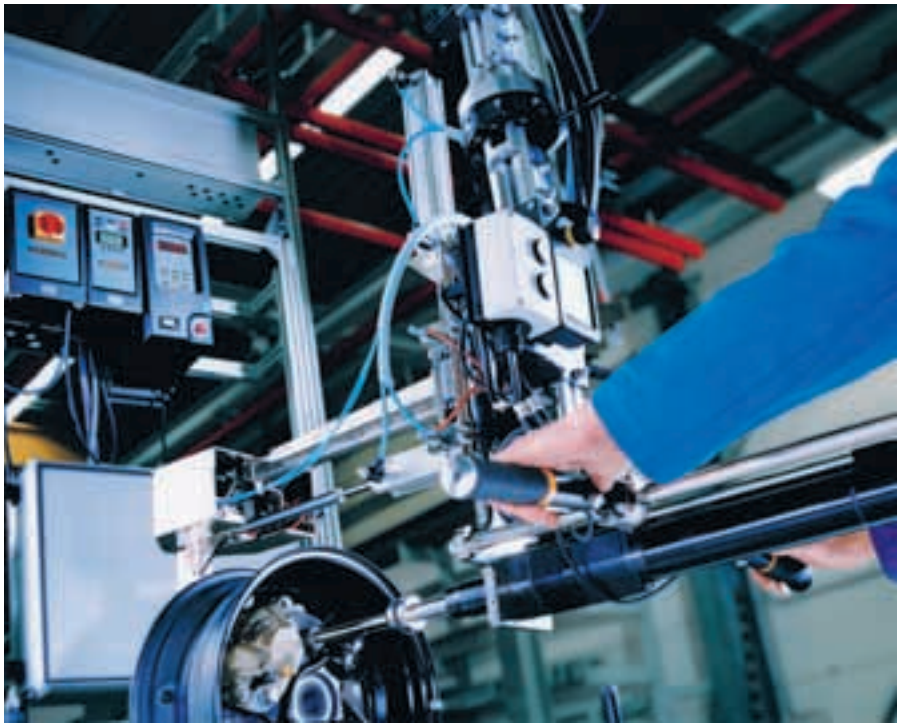

QST cable

The QST cable is coated in a durable yet flexible heavy duty jacket. The small diameter makes cable management convenient and easy. The durable moulded connector is equipped with alignment marks for foolproof connection and the cable can be attached to the spindle or controller with one hand in three turns.

- Slim 12 mm cable offers increased durability and flexibility.
- Single cable solution – All power and communication bus cables are combined.
- Compatible cables – Use same cable for extensions and double torque/angle transducer QST.
- Digital communication channel allows 50 meter cable length.

POWER MACS 4000

QST nutrunners

Standard nutrunner

Atlas Copco standard DC electric brushless resolver nutrunners. These state-of-the-art nutrunners are used for a wide variety of fastening tasks.

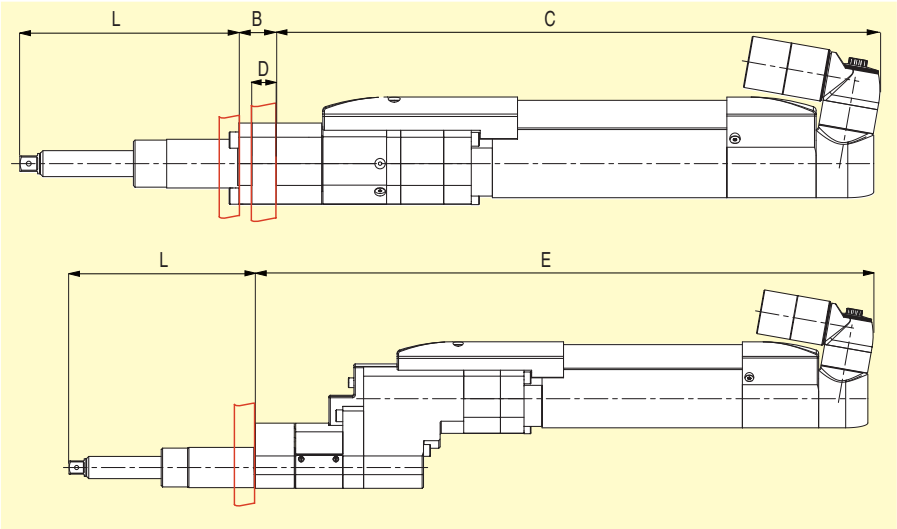

Model	Socket holder Travel mm	Torque range Nm	Torque range ft lb	Speed r/min	Min C-C	Weight kg	Weight lb	Gear ratio	Socket holder size in	Ordering No.	Socket holder Ordering No.	L mm	B mm	C mm	D mm	E mm
QST42-20CT	50	6 - 20	4 - 14	2000	43	3.1	6.9	7.50	3/8	4230 1818 00	8435 6020 10	134	23	372	15	-
QST42-50CT	50	10 - 50	7 - 35	700	43	3.8	8.4	21.33	1/2	4230 1819 00	8435 6030 10	134	23	399	15	-
QST50-90CT	50	20 - 90	15 - 65	650	51	5.8	12.7	18.21	1/2	4230 1820 00	8435 6040 10	137	23	441	15	-
QST50-150CT	50	30 - 150	22 - 110	380	51	5.8	12.8	31.24	1/2	4230 1820 00	8435 6050 10	137	23	441	15	-
QST62-150CT	50	30 - 150	22 - 110	450	63	10.2	22.5	13.94	1/2	4230 1829 00	8435 6060 10	152	25	517	15	-
QST62-230CT	50	40 - 230	29 - 170	330	63	10.2	22.5	19.04	3/4	4230 1822 00	8435 6065 10	152	25	517	15	-
QST62-350CT	50	50 - 350	37 - 258	220	63	10.2	22.5	28.33	3/4	4230 1822 00	8435 6070 10	152	25	517	15	-
QST80-450CT	50	90 - 450	66 - 332	260	81	16.7	36.9	22.67	3/4	4230 1971 00	8435 6075 10	146	30	595	20	-
QST80-600CT	50	120 - 600	88 - 442	200	81	17.0	37.0	29.56	3/4	4230 1971 00	8435 6080 10	146	30	595	20	-
QST90-750CT	50	150 - 750	111 - 553	150	91	25.0	55.0	38.89	1	4230 1824 00	8435 6085 10	152	32	600	20	-
QST90-1000CT	50	200 - 1000	147 - 737	130	91	26.0	57.0	46.84	1	4230 1824 00	8435 6090 10	152	32	600	20	-
QST42-20COT	50	6 - 20	4 - 14	2000	31	4.2	9.3	7.50	3/8	4230 1818 00	8435 6020 20	134.5	-	-	-	446
QST42-50COT	50	10 - 50	7 - 35	700	31	4.5	9.9	21.33	1/2	4230 1819 00	8435 6030 20	134.5	-	-	-	472
QST50-90COT	50	20 - 90	15 - 65	650	37	7.8	17.2	18.21	1/2	4230 1820 00	8435 6040 20	137	-	-	-	521
QST50-150COT	50	30 - 150	22 - 110	380	37	7.8	17.2	31.24	1/2	4230 1820 00	8435 6050 20	137	-	-	-	521
QST62-150COT	50	30 - 150	22 - 110	450	45	12.8	28.2	13.94	1/2	4230 1829 00	8435 6060 20	152.5	-	-	-	586
QST62-230COT	50	40 - 220	29 - 162	330	45	12.8	28.2	19.04	3/4	4230 1822 00	8435 6065 20	152.5	-	-	-	586
QST62-350COT	50	50 - 330	37 - 243	220	45	12.8	28.2	28.33	3/4	4230 1822 00	8435 6070 20	152	-	-	-	592

Extended spring travel 76 mm and 100 mm

Atlas Copco special DC electric brushless resolver nutrunner with extended spring travel for longer bolt lengths.

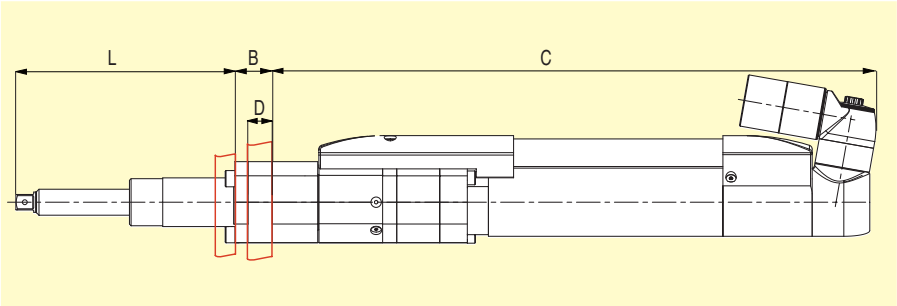

Model	Socket holder Travel mm	Torque range Nm	Torque range ft lb	Speed r/min	Min C-C	Weight kg	Weight lb	Gear ratio	Socket holder size in	Ordering No.	Socket holder Ordering No.	L mm	B mm	C mm	D mm	E mm
QST42-20CT-T76-L189-H-10	76	6 - 20	4 - 14	2000	43	3.1	6.9	7.5	3/8	8435 6020 11	4230 2114 00	190	23	372	15	-
QST42-50CT-T76-L189-H-12	76	10 - 50	7 - 35	700	43	3.8	8.4	21.3	1/2	8435 6030 11	4230 2120 00	190	23	399	15	-
QST50-90CT-T76-L200-H-12	76	20 - 90	15 - 65	650	51	5.78	12.7	18.2	1/2	8435 6040 11	4230 2127 00	200	23	441	15	-
QST50-150CT-T76-L200-H-12	76	30 - 150	22 - 110	380	51	5.8	12.8	31.2	1/2	8435 6050 11	4230 2127 00	201	23	441	15	-
QST62-230CT-T76-L200-H-19	76	40 - 230	29 - 170	330	63	10.2	22.5	19.0	3/4	8435 6065 11	4230 2137 00	200	25	517	15	-
QST62-350CT-T76-L200-H-19	76	50 - 350	37 - 258	220	63	10.2	22.5	28.3	3/4	8435 6070 11	4231 2137 00	200	25	517	15	-
QST80-600CT-T76-L214-H-19	76	120 - 600	88 - 442	200	81	17	37.0	29.6	3/4	8435 6080 11	4231 2664 99	214	30	595	20	-
QST90-1000CT-T76-L176-H-25	76	200 - 1000	147 - 737	130	91	26	57.0	46.8	1	8435 6090 11	4231 1106 00	176	32	600	20	-
QST42-50CT-T100-L191-H-12	100	10 - 50	7 - 35	700	43	3.8	8.4	21.3	1/2	8435 6030 12	4231 2055 00	191	23	399	15	-
QST50-150CT-T100-L186-H-12	100	30 - 150	22 - 110	380	51	5.8	12.8	31.2	1/2	8435 6050 12	4231 3189 00	186	23	441	15	-

Dual transducers, CTT

Atlas Copco special DC electric brushless resolver nutrunners with dual torque transducer feedback. This allows for transducer redundancy, enabling verification that readings are within certain tolerances.

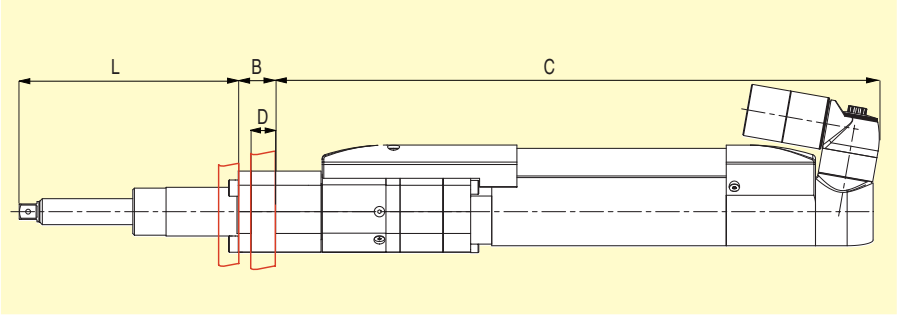

Model	Socket holder Travel mm	Torque range Nm	Torque range ft lb	Speed r/min	Min C-C	Weight kg	Weight lb	Gear ratio	Socket holder size in	Ordering No.	Socket holder Ordering No.	L mm	B mm	C mm	D mm	E mm
QST42-20CTT -T50 -L134 -H9.525	50	6- 20	4- 14	2000	43	3.1	6.9	7.50	3/8	8435 6020 50	4230 1818 00	134	23	372	15	-
QST42-20COTT -T50 -L134.5 -H9.525	50	6- 20	4- 14	2000	31	4.2	9.3	7.50	3/8	8435 6020 60	4230 1818 00	134.5	-		-	446
QST42-50CTT -T50 -L134 -H12.7	50	10- 50	7- 35	700	43	3.8	8.4	21.33	1/2	8435 6030 50	4230 1819 00	134	23	399	15	-
QST42-50COTT -T50 -L134.5 -H12.7	50	10- 50	7- 35	700	31	4.5	9.9	21.33	1/2	8435 6020 60	4230 1819 00	134.5	-		-	472
QST50-90CTT -T50 -L137 -H12.7	50	20- 90	15- 65	650	51	5.8	12.7	18.21	1/2	8435 6040 50	4230 1820 00	137	23	441	15	-
QST50-90COTT -T50 -L137 -H12.7	50	20- 90	15- 65	650	37	7.8	17.2	18.21	1/2	8435 6040 60	4230 1820 00	137	-		-	521
QST50-150CTT -T50 -L137 -H12.7	50	30- 150	22- 110	380	51	5.8	12.8	31.24	1/2	8435 6050 50	4230 1820 00	137	23	441	15	-
QST50-150COTT -T50 -L137 -H12.7	50	30- 150	22- 110	380	37	7.8	17.2	31.24	1/2	8435 6050 60	4230 1820 00	137	-		-	521
QST62-150CTT -T50 -L152 -H12.7	50	30- 150	22- 110	450	63	10.2	22.5	13.94	1/2	8435 6060 50	4230 1829 00	152	25	517	15	-
QST62-150COTT -T50 -L152.5 -H12.7	50	30- 150	22- 110	450	45	12.8	28.2	13.94	1/2	8435 6060 60	4230 1829 00	152.5	-		-	586
QST62-230CTT -T50 -L152 -H19.05	50	40- 230	29- 170	330	63	10.2	22.5	19.04	3/4	8435 6065 50	4230 1822 00	152	25	517	15	-
QST62-230COTT -T50 -L152.5 -H19.05	50	40- 220	29- 162	330	45	12.8	28.2	19.04	3/4	8435 6065 60	4230 1822 00	152.5	-		-	586
QST62-350CTT -T50 -L152 -H19.05	50	50- 350	37- 258	220	63	10.2	22.5	28.33	3/4	8435 6070 50	4230 1822 00	152	25	517	15	-
QST62-350COTT -T50 -L152 -H19.05	50	50- 330	37- 243	220	45	12.8	28.2	28.33	3/4	8435 6070 60	4230 1822 00	152	-		-	592
QST80-450CTT -T50 -L146 -H19.05	50	90- 450	66- 332	260	81	16.7	37	22.67	3/4	8435 6075 50	4230 1971 00	146	30	595	20	-
QST80-450COTT -T50 -L146 -H19.05	50	90- 450	66- 332	260	55	21	46	22.67	3/4	8435 6075 60	4230 1971 00	146				685
QST80-600CTT -T50 -L146 -H19.05	50	120- 600	88- 442	200	81	17	37	29.56	3/4	8435 6080 50	4230 1971 00	146	30	595	20	-
QST80-600COTT -T50 -L146 -H19.05	50	120- 600	88- 442	200	55	21	46	29.56	3/4	8435 6075 60	4230 1971 00	146				685
QST90-750CTT -T50 -L152 -H25.4	50	150- 750	111- 553	150	91	25	55	38.89	1	8435 6085 50	4230 1824 00	152	32	600	20	-
QST90-750COTT -T50 -L153 -H25.4	50	150- 750	111- 553	150	63	29	64	38.89	1	8435 6085 60	4230 1824 00	153				705
QST90-1000CTT -T50 -L152 -H25.4	50	200-1000	147- 737	130	91	26	57	46.84	1	8435 6090 50	4230 1824 00	152	32	600	20	-
QST90-1000COTT -T50 -L153 -H25.4	50	200-1000	147- 737	130	63	30	66	46.84	1	8435 6090 60	4230 1824 00	153				710

Dual transducers and angle feedback, CATT

Atlas Copco special DC electric brushless resolver nutrunners with dual angle and torque transducer feedback. This allows for angle and torque verification to double-check system accuracy.

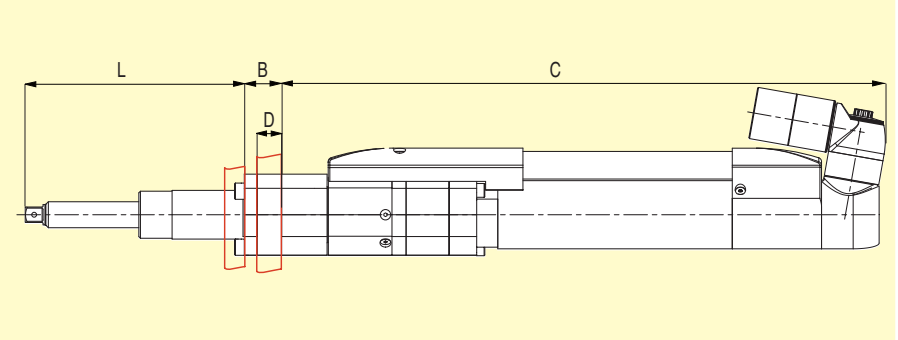

Model	Socket holder Travel mm	Torque range Nm	Torque range ft lb	Speed r/min	Min C-C	Weight kg	Weight lb	Gear ratio	Socket holder size in	Ordering No.	Socket holder Ordering No.	L mm	B mm	C mm	D mm	E mm
QST42-20CATT -T50 -L134 -H9.525	50	6- 20	4- 14	2000	43	3.1	6.9	7.50	3/8	8435 6020 70	4230 1818 00	134	23	372	15	-
QST42-50CATT -T50 -L134 -H12.7	50	10- 50	7- 35	700	43	3.8	8.4	21.33	1/2	8435 6030 70	4230 1819 00	134	23	399	15	-
QST50-90CATT -T50 -L137 -H12.7	50	20- 90	15- 65	650	51	5.8	12.7	18.21	1/2	8435 6040 70	4230 1820 00	137	23	441	15	-
QST50-150CATT -T50 -L137 -H12.7	50	30- 150	22- 110	380	51	5.8	12.8	31.24	1/2	8435 6050 70	4230 1820 00	137	23	441	15	-
QST62-150CATT -T50 -L152 -H12.7	50	30- 150	22- 110	450	63	10.2	22.5	13.94	1/2	8435 6060 70	4230 1829 00	152	25	517	15	-
QST62-230CATT -T50 -L152 -H19.05	50	40- 230	29- 170	330	63	10.2	22.5	19.04	3/4	8435 6065 70	4230 1822 00	152	25	517	15	-
QST62-350CATT -T50 -L152 -H19.05	50	50- 350	37- 258	220	63	10.2	22.5	28.33	3/4	8435 6070 70	4230 1822 00	152	25	517	15	-
QST80-450CATT -T50 -L146 -H19.05	50	90- 450	66- 332	260	81	16.7	36.9	22.67	3/4	8435 6075 70	4230 1971 00	146	30	595	20	-
QST80-600CATT -T50 -L146 -H19.05	50	120- 600	88- 442	200	81	17	37	29.56	3/4	8435 6080 70	4230 1971 00	146	30	595	20	-
QST90-750CATT -T50 -L152 -H25.4	50	150- 750	111- 553	150	91	25	55	38.89	1	8435 6085 70	4230 1824 00	152	32	600	20	-
QST90-1000CATT -T50 -L152 -H25.4	50	200-1000	147- 737	130	91	26	57	46.84	1	8435 6090 70	4230 1824 00	152	32	600	20	-

POWER MACS 4000
Cables

Tool and extension cables

Length	Ordering No.
2 m	4220 3799 02
3 m	4220 3799 03
5 m	4220 3799 05
7 m	4220 3799 07
10 m	4220 3799 10
15 m	4220 3799 15
20 m	4220 3799 20
25 m	4220 3799 25
30 m	4220 3799 30
35 m	4220 3799 35
40 m	4220 3799 40

Ethernet cables

Length	Ordering No.
0.5 m	4222 1246 00
1 m	4222 1246 01
2 m	4222 1246 02
3 m	4222 1246 03
5 m	4222 1246 05
10 m	4222 1246 10
15 m	4222 1246 15

Tool and extension cable

E-stop cables and termination

Components	Length	Ordering No.
E-stop cable	1200 mm	4222 1247 12
E-stop cable	3000 mm	4222 1247 30
E-stop termination		4222 0755 00

Ethernet cable

Power cables between MSB and TC

Suitable for	Length	Ordering No.
TC1-TC2, TC7-TC8, TC13-TC14	1350 mm	4222 1248 13
TC3-TC4, TC9-TC10, TC15-TC16	1650 mm	4222 1248 16
TC5-TC6, TC11-TC12, TC17-TC18	1950 mm	4222 1248 19
For longer distances	5 m	4222 1248 50
	10 m	4222 1370 10
	15 m	4222 1370 15
	20 m	4222 1370 20

E-stop cable

Power cable betwen MSB and TC

Easy-to-build system

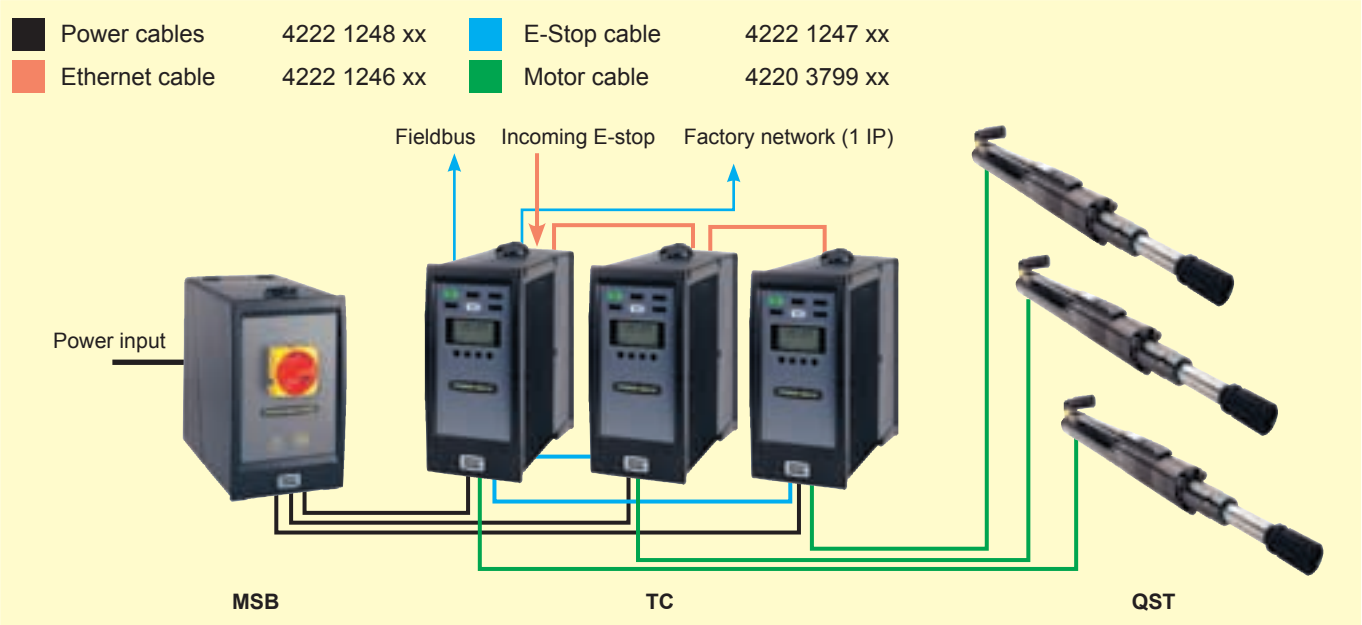

With the Power MACS 4000 controller, multiple-spindle systems are easy to configure. Simply refer to the system ordering table to see which components you need.

System ordering table for a system with one station

No. of spindles	Number of TC-P	TC-S	MSB	DB	tool cables	System cable kit[a]
1	1	0	1	0	1	1
2	1	1	1	0	2	1
3	1	2	1	0	3	1
4	1	3	1	0	4	1
5	1	4	1	0	5	1
6	1	5	1	0	6	1
7	1	6	1	1	7	1
8	1	7	1	1	8	1
9	1	8	1	1	9	1

No. of spindles	Number of TC-P	TC-S	MSB	DB	tool cables	System cable kit[a]
10	1	9	1	1	10	1
11	1	10	1	1	11	1
12	1	11	1	1	12	1
13	1	12	1	2	13	1
14	1	13	1	2	14	1
15	1	14	1	2	15	1
16	1	15	1	2	16	1
17	1	16	1	2	17	1
18	1	17	1	2	18	1

[a] See system cable kits below.

System cable kit

No. of spindles	Power cable 1350 mm 4222 1248 13	1650 mm 4222 1248 16	1950 mm 4222 1248 19	Ethernet cable 1 m 4222 1246 01	2 m 4222 1246 02	3 m 4222 1246 03	E-stop cable 1200 mm 4222 1247 12	3000 mm 4222 1247 30	Ethernet switch incl. Backplate 4222 0982 90	Ordering No.[b]
1	1	-	-	-	-	-	-	-	-	8435 6560 01
2	2	-	-	1	-	-	1	-	-	8435 6560 02
3	2	1	-	1	1	-	1	1	-	8435 6560 03
4	2	2	-	1	2	-	2	1	-	8435 6560 04
5	2	2	1	1	3	-	3	1	1	8435 6560 05
6	2	2	2	4	1	-	4	1	1	8435 6560 06
7	4	3	-	5	1	-	5	1	1	8435 6560 07
8	4	4	-	6	1	-	6	1	1	8435 6560 08
9	4	3	2	4	1	3	7	1	2	8435 6560 09
10	4	4	2	5	1	3	8	1	2	8435 6560 10
11	4	4	3	6	1	3	9	1	2	8435 6560 11
12	4	4	4	7	1	3	10	1	2	8435 6560 12
13	5	4	4	7	1	4	10	2	3	8435 6560 13
14	6	4	4	8	1	4	11	2	3	8435 6560 14
15	6	5	4	9	1	4	12	2	3	8435 6560 15
16	6	6	4	10	1	4	13	2	3	8435 6560 16
17	6	6	5	10	2	4	14	2	4	8435 6560 17
18	6	6	6	11	2	4	15	2	4	8435 6560 18

[b] Based on Atlas Copco suggested set-up.

POWER MACS

Power MACS / QMX

Where requirements for functionality, durability and flexibility are the highest, Power MACS and the QMX nutrunners provide the solution for you.

Power MACS is the controller/servo controlling the QMX nutrunners. These products are typically used for fixtured installations – automated, semi-automated or manually operated.

The Power MACS controller can be built into a cabinet or used as a Stand Alone. The Stand Alone concept is a unique way of installing these advanced systems in a very simple manner, true plug & play. Advanced products do not have to mean complex handling any more.

The QMX nutrunners are extremely robust and durable, standing up to the toughest environments. At the same time they are small and fast, allowing ergonomically built multiples. Don't let your ergonomics requirements slip just because you are using a multiple.

- **Nutrunner sequencing** – This allows nutrunners to be sequenced at each phase of the tightening process allowing even distribution of torque to each fastener.
- **Even torque distribution** – Where there is uneven torque distribution, part damage or distortion could occur with possible fastener failure or loss of residual torque.
- **Snug, threshold, final torque in one pass** – No need for multiple torque stage sequencing as with a single nutrunner tool. Fixtured nutrunners save time and effort from start to finish.
- **No missed fasteners** – With multiple nutrunners there is a spindle dedicated to each location, ensuring quality on every rundown on every bolt.
- **Better residual torques** – Synchronized controlled fastening allows residual torque levels to be more consistent with the dynamic torque specification.
- **Saving in cycle time** – Compared with using a single nutrunner tool with many rundowns, running all fasteners simultaneously reduces in-station cycle time.
- **Cost saving benefits** – Saving instation cycle time frees up operators to handle additional value adding tasks and at the same time eliminating bottle necks.

POWER MACS

Power MACS
Already ex-stock as a standard component, Power MACS is ready to take on the most demanding jobs. You do not have to add external devices to get going. Power it up, program it and you are ready to go.

PowerMACS is built to communicate. Connect the system to your network via the built-in Ethernet port or connect it to your fieldbus network (option) to communicate production data.

There is even a PLC on board, allowing you to program any logic sequence you like. The PLC is standard, included when you order a Power MACS.

Production up-time is ensured by flash PROM memory and RAM back-up memory. We know the value for you of keeping production going and did not compromise on reliability when we designed this system.

- **Plenty of memory** for handling cycle data, statistics, SPC, cycle traces, station events, etc.
- **Peripheral support** for barcode readers, printers and special communication protocols.
- **API-Server** (Application Program Interface) software component using TCP/IP.
- **Fieldbus flexibility** to handle data and I/O communications.
- **On board operating system** with real time configurable PLC to handle all in-station functions.
- **True nutrunner synchronization** achieved using high speed internal Ethernet communications.
- **Installation flexibility** with external and panel mounted controllers.
- **Inertia braking capabilities** to absorb the inertia during a high speed run-down on hard joints.

Power MACS – Tightening controllers

Model	Type	Ordering No.	Model	Type	Ordering No.
Stand Alone TCs 570 V/20 A (IP54) for QMX42 – QMX62			**Panel TCs (IP20) 570 V/20 A for QMX42 – QMX62**		
TC52 S-N	Stand Alone – No FieldBus	4240 0440 81	TC52 P-N	Panel – No FieldBus	4240 0410 81
TC52 S-P	Stand Alone – ProfiBus	4240 0441 81	TC52 P-P	Panel – ProfiBus	4240 0411 81
TC52 S-I	Stand Alone – InterBus	4240 0442 81	TC52 P-I	Panel – InterBus	4240 0412 81
TC52 S-D	Stand Alone – DeviceNet	4240 0443 81	TC52 P-D	Panel – DeviceNet	4240 0413 81
TC52 S-M	Stand Alone – ModBus Plus	4240 0444 81	TC52 P-M	Panel – ModBus Plus	4240 0414 81
TC52 S-I2	StandAlone InterBus 2Mbit	4240 0641 81	TC52 P-12	Panel InterBus 2Mbit	4240 0611 81
TC52 S-C	StandAlone ControlNet	4240 0643 81	TC52 P-C	Panel ControlNet	4240 0613 81
TC52 S-MTCP	StandAlone ModBus TCP	4240 0645 81	TC52 P-MTCP	Panel ModBus TCP	4240 0615 81
TC52 S-EIP	StandAlone Ethernet IP	4240 0646 81	TC52 P-EIP	Panel Ethernet IP	4240 0616 81
TC52 S-CC	StandAlone CC Link	4240 0647 81	TC52 P-CC	Panel CC Link	4240 0617 81
Stand Alone TCs 570 V/40 A (IP54) for QMX80 – QMX90			**Panel TCs (IP20) 570 V/40 A for QMX80 – QMX90**		
TC54 S-N	Stand Alone – No FieldBus	4240 0450 81	TC54 P-N	Panel – No FieldBus	4240 0430 81
TC54 S-P	Stand Alone – ProfiBus	4240 0451 81	TC54 P-P	Panel – ProfiBus	4240 0431 81
TC54 S-I	Stand Alone – InterBus	4240 0452 81	TC54 P-I	Panel – InterBus	4240 0432 81
TC54 S-D	Stand Alone – DeviceNet	4240 0453 81	TC54 P-D	Panel – DeviceNet	4240 0433 81
TC54 S-M	Stand Alone – ModBus Plus	4240 0454 81	TC54 P-M	Panel – ModBus Plus	4240 0434 81
TC54 S-I2	StandAlone InterBus 2Mbit	4240 0651 81	TC54 P-I2	Panel InterBus 2Mbit	4240 0631 81
TC54 S-C	StandAlone ControlNet	4240 0653 81	TC54 P-C	Panel ControlNet	4240 0633 81
TC54 S-MTCP	StandAlone ModBus TCP	4240 0655 81	TC54 P-MTCP	Panel ModBus TCP	4240 0635 81
TC54 S-EIP	StandAlone Ethernet IP	4240 0656 81	TC54 P-EIP	Panel Ethernet IP	4240 0636 81
TC54 S-CC	StandAlone CC Link	4240 0657 81	TC54 P-CC	Panel CC Link	4240 0637 81

POWER MACS

Power distribution and software

Power Box Unit – PBU

Power Box Units are used for power distribution. Standard hardware such as Ethernet switches, E-Stop circuitry, 24 VDC power supply and power contactors are all configured into the PBU.

- 400 VAC 3 phase and 24 VDC/5A or 24 VDC/10A power distribution to each controller.
- Central Ethernet switch for internal and external TC communication.
- From 1 to 10 nutrunners depending on PBU, and sizes from 400 mm wide.
- All PBUs match TC52 and TC54.

Stand Alone cable between TC – PBU

Length	Ordering No.
2 m	4231 5063 02
5 m	4231 5063 05
10 m	4231 5063 10

Power Box Unit – PBU

Model	Size HxDxW mm	DC supply	Ordering No.
Stand Alone PBU 1 Ch	300x155x400	24 V / 5 A	4240 0503 00
Stand Alone PBU 2 Ch	300x155x400	24 V / 5 A	4240 0504 00
Stand Alone PBU 5 Ch	300x155x600	24 V / 5 A	4240 0701 00
Stand Alone PBU 3+3 Ch	300x155x600	24 V / 5 A	4240 0700 00
Stand Alone PBU 10 Ch	300x155x800	24 V / 10 A	4240 0702 00

Software

WinTC for Power MACS

WinTC is the user friendly interface that allows users to program, view or configure station functionality. It is a Windows-based program that can be installed on the station PC, on a back office PC connected via Ethernet or on a portable laptop.

The software offers full reporting of tightening results as well as read-at-a-glance graphics of actual customer parts.

Each user can be assigned a specific user name and password with an access level associated with read and write capabilities. It also includes set-up wizards, product training tutorials and tightening templates that guide you through programming tightening sequences.

- User friendly Windows programming interface.
- 10 levels of read and write security.
- Read-at-a-glance graphics with actual picture of customer part.
- Graphical system map of hardware and software.
- Configurable cycle data menu for station reporting of torque data.
- Real time SPC and TDA reporting of any parameter.
- Trace reporting on torque vs. angle, current and time.
- Event logging of security access, parameter changes, errors, faults, alarms and warnings.

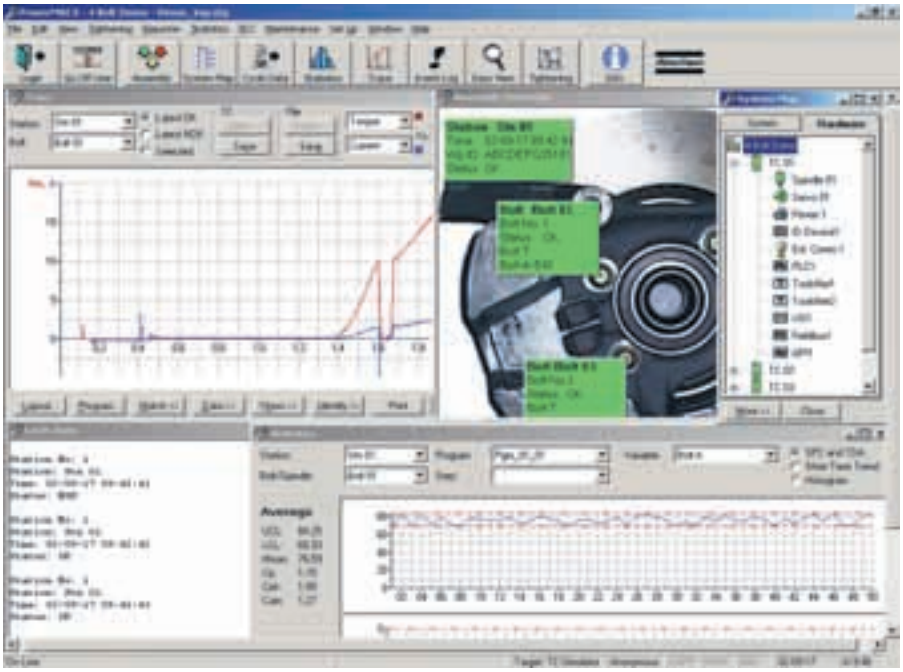

WinTC		Ordering No.
World Release 03	Single-user license	8092 1162 01
	Five-user license	8092 1162 05
	Ten-user license	8092 1162 10
World Release 05	Single-user license	8092 1306 01
	Five-user license	8092 1306 05
	Ten-user license	8092 1306 10

- Create tightening programs ranging from the very simple to as complex as the application requires.
- Maintenance menus to verify hardware and software changes without machine intervention.
- Built-in user manual for quick access.

POWER MACS
QMX nutrunners and cables

QMX nutrunners

QMX is designed to last in demanding environments.

The electric motor in the QMX nutrunners is a proprietary Atlas Copco brushless DC motor. It is highly efficient, allowing for it to put out high power at a high cycle rate without overheating. The design uses resolver technology and analogue communication between spindle and controller. All of this together allows QMX to be certified to the highest levels of both accuracy and durability.

Our range includes standard tools in several different configurations of which a sample appears in the catalogue. Should you require more information, please contact your local Atlas Copco representative.

- Standard torque range from 6-950 Nm. Up to 4000 Nm on request.
- MTBF better than 5 million cycles, under normal conditions.
- Adjustable single cable connector design for cable management flexibility.
- ISO certified to +/- 2.5% accuracy and 1 million duty cycles on hard and soft joints.
- Excellent nutrunner C-C distances.
- Low moment of rotor inertia, designed for high dynamic applications.
- Co-axial nutrunner design to handle dual nutrunner functionality on special applications.
- Different socket holder lengths (0-200 mm), permit access to applications or parts with tight clearances.
- Spring travel can be increased from the standard 50 mm to 76 or 100mm, to simplify fastening of longer bolts.

QMX cables

Cable integrity is the most crucial component of any system. QMX cables are designed with a robust extruded connector and a super-flex jacket for increased durability.

- Reduced spare parts due to a single cable design.
- 3-in-1 Power, Resolver, and Transducer connections built into one cable design.
- Super-flex cables provide increased life.
- Cable lengths in combinations up to 35 meters.

QRTT

Tranducers used for both QMX nutrunners and fixtured Tensor tool calibration. This transducer enables fast and easy set-up with highest system accuracy. By using the QRTT, no special test adapter between the nutrunner and the product itself is now needed (for further information see page 165).

Standard nutrunner

Atlas Copco standard DC electric brushless resolver nutrunners. These state-of-the-art nutrunners are used for a wide variety of fastening tasks.

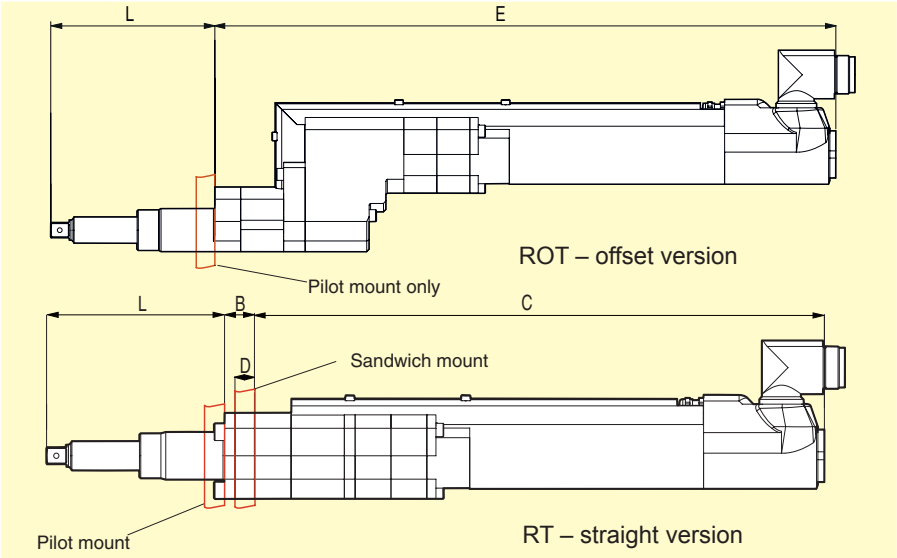

Model	Travel mm	Torque range Nm	Torque range ft lb	Speed r/min	Min C-C	Weight kg	Weight lb	Gear ratio	Socket holder size in	Ordering No.	Socket holder[a] Ordering No.	L mm	B mm	C mm	D mm	E mm
QMX42-2RT	50	6- 20	4- 14	1200	43	3.2	7.1	7.5	3/8	8432 5120 10	4230 1818 00	134	23	386	15	-
QMX42-2ROT	50	6- 18	4- 13	1200	31	4.3	9.5	7.5	3/8	8432 5120 20	4230 1818 00	134.5	-	-	-	436
QMX42-5RT	50	10- 50	7- 35	560	43	3.5	7.7	21.3	1/2	8432 5130 10	4230 1819 00	134	23	412	15	-
QMX42-5ROT	50	10- 50	7- 35	560	31	4.6	10.1	21.3	3/8	8432 5130 24	4230 1818 00	134.5	-	-	-	463
QMX42-5ROT	50	10- 50	7- 35	560	31	4.6	10.1	21.3	1/2	8432 5130 20	4230 1819 00	134.5	-	-	-	463
QMX50-9RT	50	20- 90	15- 65	560	51	5.9	13.0	18.2	1/2	8432 5140 10	4230 1820 00	137	23	462	15	-
QMX50-9ROT	50	20- 85	15- 60	560	37	8.1	17.9	18.2	1/2	8432 5140 20	4230 1820 00	137	-	-	-	519
QMX50-15RT	50	30- 150	22- 110	330	51	5.8	12.8	31.3	5/8	8432 4046 28	4230 1640 00	137	23	462	15	-
QMX50-15RT	50	30- 150	22- 110	330	51	5.8	12.8	31.3	1/2	8432 5150 10	4230 1820 00	137	23	462	15	-
QMX50-15ROT	50	30- 145	22- 105	330	37	8.0	17.6	31.3	1/2	8432 5150 20	4230 1820 00	137	-	-	-	519
QMX62-19RT	50	40- 190	30- 140	330	63	9.5	21.0	19.4	5/8	8432 5160 10	4230 1821 00	152	25	525.5	15	-
QMX62-19RT	50	40- 190	30- 140	330	63	9.5	21.0	19.4	1/2	8432 5165 10	4230 1829 00	152	25	525.5	15	-
QMX62-19ROT	50	40- 180	30- 130	330	45	12.9	28.4	19.4	5/8	8432 5160 20	4230 1821 00	152.5	-	-	-	570
QMX62-32RT	50	70- 320	50- 235	200	63	10.2	22.5	32.1	3/4	8432 5170 10	4230 1822 00	152	25	527	15	-
QMX62-32ROT	50	70- 290	50- 210	200	45	13.5	29.8	32.1	3/4	8432 5170 20	4230 1822 00	152.5	-	-	-	570
QMX80-58RT	50	120- 580	90- 425	200	81	20.0	44.1	29.6	3/4	8432 5180 10	4230 1971 00	146	30	610	20	-
QMX80-58ROT	50	120- 550	90- 405	200	55	21.0	46.3	29.6	3/4	8432 5180 20	4230 1971 00	146	-	-	-	672
QMX90-95RT	50	200- 950	150- 700	130	91	22.0	48.5	46.8	1	8432 5190 10	4230 1824 00	152	32	621	20	-
QMX90-95ROT	50	200- 900	150- 660	130	63	30.0	66.1	46.8	1	8432 5190 20	4230 1824 00	152.5	-	-	-	700

[a] The socket holder is included in the product.

Extended spring travel 76 mm and 100 mm

Atlas Copco special DC electric brushless resolver nutrunner with extended spring travel for longer bolt lengths.

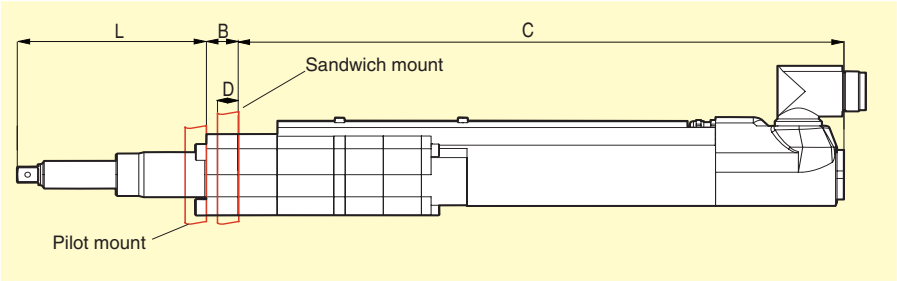

Model	Travel mm	Torque range Nm	Torque range ft lb	Speed r/min	Min C-C	Weight kg	Weight lb	Gear ratio	Socket holder size in	Ordering No.	Socket holder[a] Ordering No.	L mm	B mm	C mm	D mm
QMX42-2RT	76	6 - 20	4- 14	1200	43	3.2	7.1	7.5	3/8	8432 5120 11	4230 2114 00	190	23	386	15
QMX42-5RT	76	10 - 50	7- 35	560	43	3.7	8.2	21.3	1/2	8432 5130 11	4230 2120 00	190	23	412	15
QMX50-9RT	76	20 - 90	15- 65	560	51	6.5	14.3	18.2	1/2	8432 5140 11	4230 2127 00	200	23	464	15
QMX50-15RT	76	30 - 150	22- 110	330	51	7.0	15.4	31.3	1/2	8432 5150 11	4230 2127 00	201	25	462	15
QMX62-19RT	76	40 - 190	30- 140	330	63	9.8	21.6	19.4	5/8	8432 5160 11	4230 2136 00	200	25	526	15
QMX62-19RT	76	40 - 190	30- 140	330	63	9.8	21.6	19.4	1/2	8432 5165 11	4230 2189 00	200	25	526	15
QMX62-32RT	76	70 - 320	50- 235	200	63	10.5	23.1	32.1	3/4	8432 5170 11	4230 2137 00	200	25	527	15
QMX80-58RT	76	120 - 580	90- 425	200	81	21.0	46.3	29.6	3/4	9831 4048 04	4231 2664 00	214	43	623	20
QMX90-95RT	76	200 - 950	150- 700	130	91	23.0	50.7	46.8	1	9831 4058 18	4231 1106 00	176	32	670	20
QMX42-5RT	100	10 - 50	7- 35	560	43	8.0	17.6	21.3	3/8	9831 4045 53	4231 2055 00	191	23	510	15
QMX50-15RT	100	30 - 150	22- 110	560	51	11.0	24.3	31.3	1/2	9831 4067 15	4231 3189 00	186	23	565	15

[a] The socket holder is included in the product.

Dual transducers, RTT

Atlas Copco special DC electric brushless resolver nutrunners with dual torque transducer feedback. This allows for transducer redundancy, enabling verification that readings are within certain tolerances.

Dual transducers and angle feedback, RATT

Atlas Copco special DC electric brushless resolver nutrunners with dual angle and torque transducer feedback. This allows for angle and torque verification to double-check system accuracy.

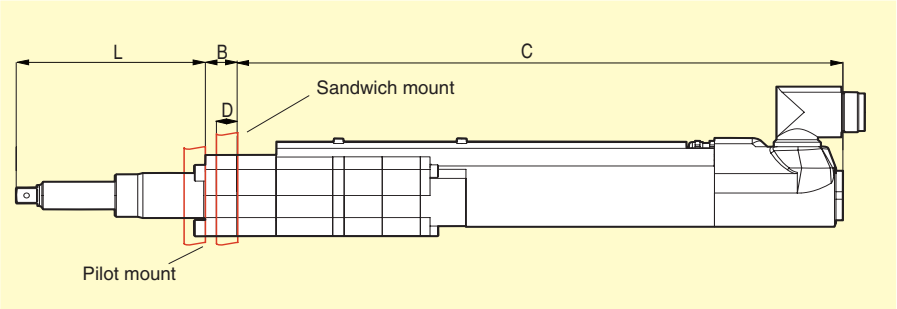

Model	Travel mm	Torque range Nm	Torque range ft lb	Speed r/min	Min C-C	Weight kg	Weight lb	Gear ratio	Socket holder size in	Ordering No.	Socket holder[a] Ordering No.	L mm	B mm	C mm	D mm
RTT															
QMX42-2RTT	50	6 - 20	4 - 14	1200	43	3.2	7.1	7.5	3/8	8432 5120 50	4230 1818 00	134	23	386	15
QMX42-5RTT	50	10 - 50	7 - 35	560	43	3.5	7.7	21.3	1/2	8432 5130 50	4230 1819 00	134	23	412	15
QMX50-9RTT	50	20 - 90	15 - 65	560	51	5.9	13.0	18.2	1/2	8432 5140 50	4230 1820 00	137	23	462	15
QMX50-15RTT	50	30 - 150	22 - 110	330	51	5.9	13.0	31.3	1/2	8432 5150 50	4230 1820 00	137	23	462	15
QMX62-19RTT	50	40 - 190	30 - 140	330	63	9.5	21.0	19.4	5/8	8432 5160 50	4230 1821 00	152	25	526	15
QMX62-32RTT	50	70 - 320	50 - 235	200	63	10.2	22.5	32.1	3/4	8432 5170 50	4230 1822 00	152	25	527	15
QMX80-58RTT	50	120 - 580	90 - 425	200	81	20.0	44.1	29.6	3/4	9831 4048 17	4230 1971 00	146	30	610	20
QMX90-95RTT	50	200 - 950	150 - 700	130	91	22.0	48.5	46.8	1	9831 4058 34	4230 1824 00	152	32	621	20
RATT															
QMX42-2RATT	50	6 - 20	4 - 14	1200	43	3.7	8.2	7.5	3/8	8432 5120 70	4230 1818 00	134	23	386	15
QMX42-5RATT	50	10 - 50	7 - 35	560	43	3.9	8.6	21.3	1/2	8432 5130 70	4230 1819 00	134	23	412	15
QMX50-9RATT	50	20 - 90	15 - 65	560	51	6.0	13.2	18.2	1/2	8432 5140 70	4230 1820 00	137	23	462	15
QMX50-15RATT	50	30 - 150	22 - 110	330	51	6.0	13.2	31.3	1/2	8432 5150 70	4230 1820 00	137	23	462	15
QMX62-19RATT	50	40 - 190	30 - 140	330	63	10.0	22.0	19.4	5/8	8432 5160 70	4230 1821 00	152	25	526	15
QMX62-19RATT	50	40 - 190	30 - 140	330	63	10.0	22.0	19.4	1/2	8432 5165 70	4230 1829 00	152	25	526	15
QMX62-32RATT	50	70 - 320	50 - 235	200	63	10.8	23.8	32.1	3/4	8432 5170 70	4230 1822 00	152	25	527	15
QMX80-58RATT	50	120 - 580	90 - 425	200	81	21.0	46.3	29.6	3/4	9831 4048 18	4230 1971 00	146	30	610	20
QMX90-95RATT	50	200 - 950	150 - 700	130	91	22.5	49.6	46.8	1	9831 4058 35	4230 1824 00	152	32	621	20

[a] The socket holder is included in the product.

Angle head tools

Atlas Copco special DC electric brushless resolver nutrunners with a right angle head. These simplify access to hard-to-reach applications, enabling nutrunners to be positioned in any way.

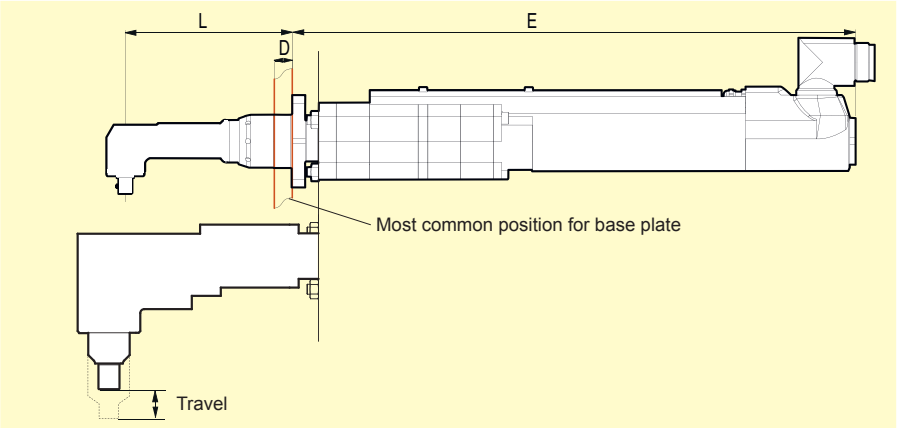

Model	Travel mm	Torque range Nm	Torque range ft lb	Speed r/min	Min C-C	Weight kg	Weight lb	Gear ratio	Socket holder size in	Ordering No.	Socket holder[a] Ordering No.	L mm	B mm	C mm	D mm	E mm
QMX42-7RTV	-	15 - 70	11 - 50	360	(40)	3.7	8.2	36.1	1/2	9831 4045 46	-					
QMX42-7RTV	50	15 - 70	11 - 50	360	(38)	5.3	11.7	36.1	1/2	9831 4045 32	4231 2797 00	-	-	-	-	-
QMX42-7RTV	25	15 - 70	11 - 50	360	(38)	5.1	11.2	36.1	1/2	9831 4045 64	4231 3207 00	-	-	-	-	-
QMX42-3RTV	-	6 - 30	4 - 22	1000	(36)	3.5	7.7	11.7	3/8	9831 4045 95	-	-	-	-	-	-
QMX50-14RTV	-	30 - 140	22 - 100	320	(51)	6.2	13.7	33.9	1/2	9831 4046 84	-	141	-	-	15	476
QMX50-20RTV	-	40 - 160	30 - 115	190	(51)	6.1	13.4	58.0	1/2	9831 4046 78	-	141	-	-	15	476
QMX62-33RTV	-	70 - 330	50 - 250	175	67	13.5	29.8	36.0	3/4	9831 4047 46	-	153	-	-	14	548.5
QMX62-35RTV	24	70 - 350	50 - 250	110	63	14.5	32.0	36.0	3/4	9831 4047 31	4231 2416 00	-	-	-	-	-
QMX62-60RTV	-	120 - 600	90 - 440	60	106	21.0	46.3	105.0	1	9831 4047 21	-	-	-	-	-	-
QMX62-60RATTV	50	120 - 600	90 - 440	60	106	23.0	50.7	105.0	1	9831 4047 50	4231 3018 00	-	-	-	-	-

[a] The socket holder is included in the product.

POWER MACS
QMX nutrunners and cables

Angle nutrunner

Atlas Copco special DC electric brushless resolver nutrunners with a right angle head and spring travel. The right angle allows these tools to be positioned in hard-to-reach locations without placing undue strain on them.

Model	Travel mm	Torque range Nm	Torque range ft lb	Speed r/min	Min C-C	Weight kg	Weight lb	Gear ratio	Socket holder size in	Ordering No.	Socket holder[a] Ordering No.
QMX42-5RVT	76	10 - 50	7 - 35	560	43	5.0	11.0	21.3	3/4	9831 4045 56	4231 2473 00
QMX50-15RVT	50	30 - 145	22 - 105	300	55	9.4	20.7	31.3	1/2	9831 4046 85	4230 1819 00
QMX62-28RVT	50	50 - 280	35 - 205	190	82	16.4	36.2	32.1	3/4	9831 4047 36	4230 1822 00
QMX90-95RVT	50	200 - 950	150 - 700	130	108	30.0	66.1	46.8	3/4	9831 4058 17	4230 1824 00

[a] The socket holder is included in the product.

U-nutrunner

Atlas Copco special ”U” design DC electric brushless resolver nutrunners. Designed for locations with minimal nutrunner length clearances as in exhaust manifold or indexing applications.

Model	Travel mm	Torque range Nm	Torque range ft lb	Speed r/min	Min C-C	Weight kg	Weight lb	Gear ratio	Socket holder size in	Ordering No.	Socket holder[a] Ordering No.
QMX42-5RUT	50	20 - 50	15 - 35	560	43	5.5	12.1	21.3	1/2	9831 4045 45	4230 1819 00
QMX50-9RUT	76	15 - 80	11 - 55	560	51	8.0	17.6	18.2	1/2	9831 4046 31	4230 1820 00
QMX50-15RUT	76	30 - 140	22 - 100	330	51	8.0	17.6	31.3	1/2	9831 4046 26	4230 1820 00
QMX62-19RUT	50	30 - 170	22 - 125	330	88	15.0	33.1	19.4	3/4	9831 4047 37	4230 1822 00
QMX62-32RUT	50	55 - 280	40 - 205	200	88	18.0	39.7	32.1	3/4	9831 4047 35	4230 1822 00
QMX95-200RUT	12	350 -1750	260 - 1250	60	95	34.0	75.0	98.0	HEX	9831 4058 32	not available

[a] The socket holder is included in the product.

Co-axial nutrunner

Atlas Copco special co axial-design DC electric brushless resolver nutrunners. This design enables our tools to perform special gauging or fastening applications. Essentially, a nutrunner inside a nutrunner. The center nutrunner is used to set a position or torque while the outside nutrunner synchronizes and secures the position with a lock nut or monitors for excessive friction.

Model	Travel mm	Torque range Nm	Torque range ft lb	Speed r/min	Min C-C	Weight kg	Weight lb	Gear ratio	Socket holder[a] size in	Ordering No.
QMX42-2RT/QMX42-5ROT	24 / 24	15 / 63	11 / 45	270 / 170	44	10	22	16.00 / 41.23	1/4 / 3/4	9831 4045 62
QMX42-2RT/QMX42-5ROT	24 / 24	20 / 50	15 / 35	1200 / 560	44	10	22	7.5 / 21.33	1/4 / 3/4	9831 4045 83
QMX42-5RT/QMX50-15RT	24 / 24	50 / 150	35 / 110	200 / 350	64	15	33	21.33 / 31.24	3/8 / 3/4	9831 4046 35
QMX80-55RT/QMX80-10RT	36 / –	550 / 100	400 / 75	200 / 100	216	48	105	29.56 / 48.44	3/4 / –	9831 4040 65

[a] The socket holder is included in the product.

Cables Stand Alone

Model	Ordering No.
Cable between spindle and controller, 2 m	4231 5062 02
Cable between spindle and controller, 5 m	4231 5062 05
Cable between spindle and controller, 10 m	4231 5062 10
Cable between spindle and controller, 15 m	4231 5062 15
Cable between spindle and controller, 20 m	4231 5062 20
Cable between PBU and controller, 2 m	4231 5063 02
Cable between PBU and controller, 5 m	4231 5063 05
Cable between PBU and controller, 10 m	4231 5063 10

POWER MACS
QMX nutrunners

Atlas Copco special socket holder designs allow you to reach into applications or parts with tight clearances.

QMX42-2RT

A mm	Product No.	Socket holder size in	Socket holder[a] Ordering No.
0[b]	8432 5120 10	3/8	4230 1818 00
50	8432 4063 08	3/8	4230 2217 00
100	8432 4063 10	3/8	4230 2217 01
150	8432 4063 12	3/8	4230 2217 02
200	8432 4063 14	3/8	4230 2217 03
0	8432 4063 07	1/2	4230 1819 00
50	8432 4063 09	1/2	4230 2218 00
100	8432 4063 11	1/2	4230 2218 01
150	8432 4063 13	1/2	4230 2218 02
200	8432 4063 15	1/2	4230 2218 03

QMX42-5RT

A mm	Product No.	Socket holder size in	Socket holder[a] Ordering No.
0	8432 4063 17	3/8	4230 1818 00
50	8432 4063 18	3/8	4230 2217 00
100	8432 4063 20	3/8	4230 2217 01
150	8432 4063 22	3/8	4230 2217 02
200	8432 4063 24	3/8	4230 2217 03
0[b]	8432 5130 10	1/2	4230 1819 00
50	8432 4063 19	1/2	4230 2218 00
100	8432 4063 21	1/2	4230 2218 01
150	8432 4063 23	1/2	4230 2218 02
200	8432 4063 25	1/2	4230 2218 03

QMX50-9RT

A mm	Product No.	Socket holder size in	Socket holder[a] Ordering No.
0[b]	8432 5140 10	1/2	4230 1820 00
50	8432 4063 28	1/2	4230 2219 00
100	8432 4063 29	1/2	4230 2219 01
150	8432 4063 30	1/2	4230 2219 02
200	8432 4063 31	1/2	4230 2219 03

QMX50-15RT

A mm	Product No.	Socket holder size in	Socket holder[a] Ordering No.
0[b]	8432 5150 10	1/2	4230 1820 00
50	8432 4063 68	1/2	4230 2219 00
100	8432 4063 33	1/2	4230 2219 01
150	8432 4063 34	1/2	4230 2219 02
200	8432 4063 35	1/2	4230 2219 03
100[c]	8432 4071 79	5/8	4232 2155 00

QMX62-19RT

A mm	Product No.	Socket holder size in	Socket holder[a] Ordering No.
0	8432 5165 10	1/2	4230 1829 00
50	8432 4063 37	1/2	4230 2223 00
100	8432 4063 40	1/2	4230 2223 01
150	8432 4063 43	1/2	4230 2223 02
200	8432 4063 46	1/2	4230 2223 03
0[b]	8432 5160 10	5/8	4230 1821 00
50	8432 4063 38	5/8	4230 2224 00
100	8432 4063 41	5/8	4230 2224 01
150	8432 4063 44	5/8	4230 2224 02
200	8432 4063 47	5/8	4230 2224 03
0	8432 4063 71	3/4	4230 1822 00
50	8432 4063 39	3/4	4230 2226 00
100	8432 4063 42	3/4	4230 2226 01
150	8432 4063 45	3/4	4230 2226 02
200	8432 4063 48	3/4	4230 2226 03

QMX62-32RT

A mm	Product No.	Socket holder size in	Socket holder[a] Ordering No.
0	8432 4049 37	1/2	4230 1829 00
50	8432 4063 52	1/2	4230 2223 00
100	8432 4063 55	1/2	4230 2223 01
150	8432 4063 58	1/2	4230 2223 02
200	8432 4063 61	1/2	4230 2223 03
0	8432 4063 72	5/8	4230 1821 00
50	8432 4063 53	5/8	4230 2224 00
100	8432 4063 56	5/8	4230 2224 01
150	8432 4063 59	5/8	4230 2224 02
200	8432 4063 62	5/8	4230 2224 03
0[b]	8432 5170 10	3/4	4230 1822 00
50	8432 4063 54	3/4	4230 2226 00
100	8432 4063 57	3/4	4230 2226 01
150	8432 4063 60	3/4	4230 2226 02
200	8432 4063 63	3/4	4230 2226 03

[a] The socket holder is included in the product.
[b] This socket holder follows when you order the standard nutrunner.
[c] Recommended for wheel multiple. Extended front part housing.
NOTE: The spindle travel is 50 mm for all sockets holders.

Screwdriver bits – Hexagon Drive

DRIVE SYSTEM: 1/4" HEXAGON, STYLE C 6.3

SCREW PROFILE:

Slotted bits

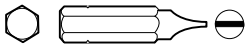

Application: For slotted screws
Drive: 1/4" Hexagon, Style C 6.3

Blade thickness mm	Blade width mm	Length mm	Ordering No.
0.55	3.5	25	4023 1400 21
0.6	4	25	4023 1400 22
0.8	5.5	25	4023 1400 26

Phillips bits

Application: For Phillips screws
Drive: 1/4" Hexagon, Style C 6.3

Point	Length mm	Ordering No.
PH0	25	4023 1326 00
PH1	25	4023 0696 01
PH2	25	4023 0697 01
PH3	25	4023 0698 01

Hex bits

Application: For Hex-socket screws
Drive: 1/4" Hexagon, Style C 6.3

Point	Length mm	Ordering No.
2	25	4023 1318 00
2.5	25	4023 1319 00
3	25	4023 0819 00
4	25	4023 1320 00
5	25	4023 0820 00
6	25	4023 0821 00
7	25	4023 1430 00
8	25	4023 0905 00

TorxPlus bits

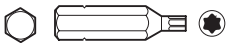

Application: For TorxPlus screws
Drive: 1/4" Hexagon, Style C 6.3

Point	Length mm	Ordering No.
6IP	25	4023 0001 70
7IP	25	4023 0002 22
8IP	25	4023 0001 74
10IP	25	4023 0001 78

Torx bits

Application: For Torx screws
Drive: 1/4" Hexagon, Style C 6.3

Point	Length mm	Ordering No.
TX6	25	4023 0001 60
TX8	25	4023 1329 00
TX9	25	4023 1330 00
TX10	25	4023 1321 00
TX15	25	4023 1331 00
TX20	25	4023 1322 00
TX25	25	4023 1332 00
TX27	25	4023 1333 00
TX30	25	4023 1323 00
TX40	25	4023 1334 00

Pozidriv bits

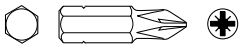

Application: For Pozidriv screws
Drive: 1/4" Hexagon, Style C 6.3

Point	Length mm	Ordering No.
PZ1	25	4023 1101 11
PZ2	25	4023 1101 12
PZ3	25	4023 1101 13

DRIVE SYSTEM: 5/16" HEXAGON, STYLE C 8

SCREW PROFILE:

Hex Bits

Application: For Hex-socket screws
Drive: 5/16'' Hexagon, Style C 8

Point mm	Length mm	Ordering No.
5	34	4023 1215 00
6	34	4023 1216 00
7	34	4023 1219 00
8	34	4023 1217 00
10	34	4023 1218 00

DRIVE SYSTEM: 1/4" HEXAGON, STYLE E 6.3

SCREW PROFILE:

Slotted bits

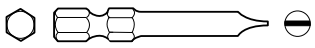

Application: For slotted screws
Drive: 1/4" Hexagon, Style E 6.3

Blade thickness mm	Blade width mm	Length mm	Ordering No.
0.56	3.1	49	4023 2020 21
0.76	3.84	49	4023 2020 23
0.86	4.75	49	4023 2020 24
0.91	6.35	49	4023 2020 26
1.07	6.99	49	4023 2020 27
1.17	7.92	49	4023 2020 28
1.27	9.14	49	4023 2020 29
0.66	3.4	76	4023 2030 21
0.76	3.84	76	4023 2030 23
0.86	4.75	76	4023 2030 24

Slotted bits with finder

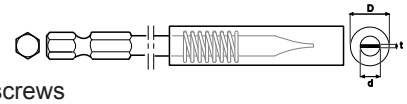

Application: For slotted screws
Drive: 1/4" Hexagon, Style E 6.3

Outside dia (D) mm	Blade thickness (t) mm	Blade width (d) mm	Length mm	Ordering No.
4.9	0.91	4.9	95	4023 0683 00
6.12	0.97	6.1	95	4023 1313 00
7.37	1.07	7.4	95	4023 0684 00
8.89	1.17	8.9	95	4023 0949 00
10.03	1.27	10.0	95	4023 0685 00

BITS AND POWER SOCKETS

Phillips bits

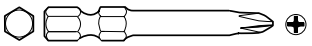

Application: For Phillips screws
Drive: 1/4" Hexagon, Style E 6.3

Point	Length mm	Ordering No.
PH00	50	4023 0001 51
PH00	70	4023 0001 52
PH00	90	4023 0001 53
PH0	49	4023 1325 00
PH1	49	4023 2320 21
PH1	70	4023 2327 21
PH1	89	4023 2335 21
PH1	152	4023 2360 21
PH2	49	4023 2320 22
PH2	70	4023 2327 22
PH2	89	4023 2335 22
PH2	152	4023 2360 22
PH3	49	4023 2320 23
PH3	70	4023 2327 23
PH3	89	4023 2335 23
PH3	152	4023 2360 23

Hex bits

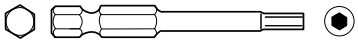

Application: For Hex-socket screws
Drive: 1/4" Hexagon, Style E 6.3

Point mm	Length mm	Ordering No.
2	2	4023 1311 00
2.5	2.5	4023 1312 00
3	3	4023 0710 00
4	4	4023 0711 00
5	5	4023 0712 00
6	6	4023 0906 00
8	8	4023 1369 00
10	10	4023 1370 00

Torx bits

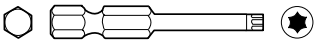

Application: For Torx screws
Drive: 1/4" Hexagon, Style E 6.3

Point	Length mm	Ordering No.
TX5	49	4023 0002 16
TX5	70	4023 0002 17
TX6	49	4023 0001 61
TX6	70	4023 0001 62
TX6	90	4023 0001 63
TX7	49	4023 0002 18
TX7	70	4023 0002 19
TX8	49	4023 2220 21
TX8	89	4023 2235 21
TX9	49	4023 2220 22
TX9	89	4023 2235 22
TX10	49	4023 2220 23
TX10	89	4023 2235 23
TX15	49	4023 2220 24
TX15	89	4023 2235 24
TX20	49	4023 2220 25
TX20	89	4023 2235 25
TX25	49	4023 2220 26
TX25	89	4023 2235 26
TX27	49	4023 2220 27
TX27	89	4023 2235 27
TX30	49	4023 2220 28
TX30	89	4023 2235 28
TX40	89	4023 2235 29

TorxPlus bits

Application: For TorxPlus screws
Drive: 1/4" Hexagon, Style E 6.3

Point	Length mm	Ordering No.
5IP	49	4023 0002 20
5IP	70	4023 0002 21
6IP	49	4023 0001 71
6IP	70	4023 0001 72
6IP	90	4023 0001 73
7IP	49	4023 0002 23
7IP	70	4023 0002 24
7IP	90	4023 0002 25
8IP	49	4023 0001 75
8IP	70	4023 0001 76
8IP	90	4023 0001 77
10IP	49	4023 0001 79
10IP	70	4023 0001 80
10IP	90	4023 0001 81

Pozidriv bits

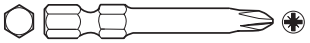

Application: For Pozidriv screws
Drive: 1/4" Hexagon, Style E 6.3

Point	Length mm	Ordering No.
PZ0	49	4023 0001 41
PZ0	70	4023 0001 42
PZ1	49	4023 2420 21
PZ1	70	4023 2427 21
PZ1	89	4023 2435 21
PZ2	49	4023 2420 22
PZ2	70	4023 2427 22
PZ2	89	4023 2435 22
PZ3	49	4023 2420 23
PZ3	89	4023 2435 23

DRIVE SYSTEM: 7/16" HEXAGON, STYLE E 11.2

SCREW PROFILE:

Hex bits

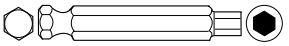

Application: For Hex-socket screws
Drive: 7/16" Hexagon, Style E 11.2

Point mm	Length mm	Ordering No.
5	70	4023 0800 00
6	70	4023 0801 00
8	70	4023 0802 00
10	70	4023 0760 00

Bit Holders

DRIVE SYSTEM: 1/4" HEXAGON, STYLE E 6.3

APPLICATION: SUITABLE FOR BITS WITH 1/4" HEXAGON DRIVE

Standard type

Hex-drive	Hex-female	Diameter (D) mm	Length L mm	Length L1 mm	Magnetic	Ordering No.
1/4"	1/4"	11.1	46.5	28.5	Yes	4023 1208 00
1/4"	1/4"	11.1	46.6	103.5	Yes	4023 1209 00

Quick release type

Hex-drive	Hex-female	Diameter (D) mm	Length L mm	Length L1 mm	Magnetic	Ordering No.
1/4"	1/4"	16	37	28	Yes	4023 0707 00

Adapters

DRIVE SYSTEM: 1/4" HEXAGON, STYLE E 6.3

APPLICATION: FOR BITS WITH WING-SHANK 4 MM DRIVE

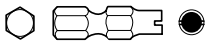

Adapters

	Ordering No.
Adapter	4220 0105 00

Screwdriver bits – Halfmoon Drive

DRIVE SYSTEM: 4 MM HALFMOON

SCREW PROFILE:

Pozidriv bits

Application: For Pozidriv screws
Drive: Halfmoon 4 mm

Point	Length mm	Ordering No.
PZ0	44	4023 0002 26
PZ0	64	4023 0002 27
PZ1	44	4023 0002 28
PZ1	64	4023 0002 29

Phillips bits

Application: For Phillips screws
Drive: Halfmoon 4 mm

Point	Length mm	Ordering No.
PH000	44	4023 0001 10
PH000	64	4023 0001 11
PH00	44	4023 0001 12
PH00	64	4023 0001 13
PH0	44	4023 0001 14
PH0	64	4023 0001 15
PH1	44	4023 0001 16
PH1	64	4023 0001 17
PH2	44	4023 0002 30
PH2	64	4023 0002 31

Hex bits

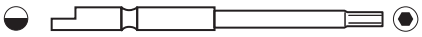

Application: For Hex-socket screws
Drive: Halfmoon 4 mm

Point	Length mm	Ordering No.
1.5	44	4023 0002 41
2	44	4023 0002 42
2.5	44	4023 0002 43
3	44	4023 0002 44

Torx bits

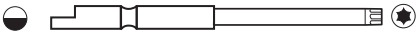

Application: For Torx screws
Drive: Halfmoon 4 mm

Point	Length mm	Ordering No.
TX1	44	4023 0002 32
TX1	64	4023 0002 33
TX2	44	4023 0001 06
TX2	64	4023 0001 07
TX3	44	4023 0001 08
TX3	64	4023 0001 09
TX4	44	4023 0001 20
TX4	64	4023 0001 21
TX5	44	4023 0001 22
TX5	64	4023 0001 23
TX6	44	4023 0001 24
TX6	64	4023 0001 25
TX8	44	4023 0001 26
TX8	64	4023 0001 27
TX10	44	4023 0001 28
TX10	64	4023 0001 29

TorxPlus bits

Application: For TorxPlus screws
Drive: Halfmoon 4 mm

Point	Length mm	Ordering No.
1IP	44	4023 0002 34
2IP	44	4023 0002 35
3IP	44	4023 0002 36
4IP	44	4023 0001 30
4IP	64	4023 0001 31
5IP	44	4023 0001 32
5IP	64	4023 0001 33
6IP	44	4023 0001 34
6IP	64	4023 0001 35
8IP	44	4023 0001 36
8IP	64	4023 0001 37
10IP	44	4023 0001 38
10IP	64	4023 0001 39

Hex-socket bits

Nutsetter. Application: For nuts and thread-headed screws
Drive: Halfmoon 4 mm

Point	Length mm	Ordering No.
2.3	44	4023 0002 45
2.5	44	4023 0002 46
3	44	4023 0002 47
4	44	4023 0002 48
4.5	44	4023 0002 49
5	44	4023 0002 50
5.5	44	4023 0002 51

Slotted bits

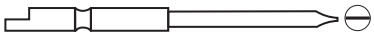

Application: For slotted screws
Drive: Halfmoon 4 mm

Blade width mm	Blade thickness mm	Length mm	Ordering No.
2	0.3	44	4023 0002 37
2.5	0.3	44	4023 0002 38
3	0.4	44	4023 0002 39
4	0.5	44	4023 0002 40

Adapters

DRIVE SYSTEM: 4 MM HALFMOON
APPLICATION: SUITABLE FOR BITS WITH 1/4" HEXAGON DRIVE

Adapters

	Ordering No.
Non magnetic	4023 0002 15

Screwdriver bits – Wing-shank Drive

DRIVE SYSTEM: 4 MM WING-SHANK

SCREW PROFILE:

Torx bits

Application: For Torx screws
Drive: Wing-shank 4 mm

Point	Length mm	Ordering No.
TX1	40	4023 0002 52
TX2	40	4023 0002 53
TX3	40	4023 0002 54
TX4	40	4023 0001 90
TX5	60	4023 0001 91
TX6	60	4023 0001 92
TX8	60	4023 0001 93
TX10	60	4023 0001 94

TorxPlus bits

Application: For TorxPlus screws
Drive: Wing-shank 4 mm

Point	Length mm	Ordering No.
4IP	60	4023 0002 10
5IP	60	4023 0002 11
6IP	60	4023 0002 12
8IP	60	4023 0002 13
10IP	60	4023 0002 14

Pozidriv bits

Application: For Pozidriv screws
Drive: Wing-shank 4 mm

Point	Length mm	Ordering No.
PZ0	60	4023 0002 03
PZ1	60	4023 0002 04
PZ2	60	4023 0002 55

Phillips bits

Application: For Phillips screws
Drive: Wing-shank 4 mm

Point	Length mm	Ordering No.
PH00	40	4023 0002 56
PH0	40	4023 0002 57
PH1	40	4023 0002 58
PH2	40	4023 0002 59

Hex bits

Application: For Hex screws
Drive: Wing-shank 4 mm

Point	Length mm	Ordering No.
1.5	60	4023 0002 60
2	60	4023 0002 61
2.5	60	4023 0002 62
3	60	4023 0002 63

Slotted bits

Application: For Slotted screws
Drive: Wing-shank 4 mm

Blade thickness mm	Blade width mm	Length mm	Ordering No.
0.28	1.3	40	4023 1327 01
0.30	1.7	40	4023 1327 02
0.3	2.0	40	4023 1327 03
0.3	2.5	40	4023 1327 04

7. POWER SOCKETS

7.1 Power socket 1/4" square drive

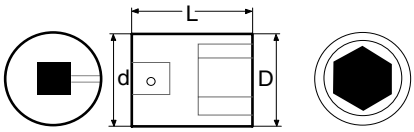

1/4"	Width across flats	D mm	d mm	Overall length L mm	Ordering No.
mm	4	7.5	13	25	4026 0604 00*
	5	8.5	13	25	4026 0605 00*
	5.5	9	13	25	4026 0605 50*
	6	9.5	13	25	4026 0606 00*
	7	11	13	25	4026 0607 00*
	8	12	13	25	4026 0608 00*
	9	13	13	25	4026 0609 00*
	10	14.5	13	25	4026 0610 00*
	11	16	13	25	4026 0611 00*
	12	17	13	25	4026 0612 00*
	13	18	13	25	4026 0613 00*
	14	19	13	25	4026 0614 00*
in	7/32	9	13	25	4026 0605 50*
	1/4	9.5	13	25	4026 0708 00*
	9/32	11	13	25	4026 0607 00*
	5/16	12	13	25	4026 0608 00*
	3/8	14.5	13	25	4026 0712 00*
	13/32	14.5	13	25	4026 0610 00*
	7/16	16	13	25	4026 0611 00*
	15/32	17	13	25	4026 0612 00*
	1/2	18	13	25	4026 0716 00*
	9/16	19	13	25	4026 0614 00*

7.2 Power socket 3/8" square drive

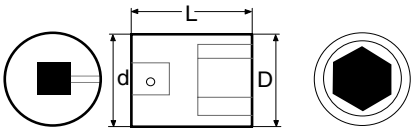

3/8"	Width across flats	D mm	d mm	Overall length L mm	Ordering No.
mm	7	12.5	19	30	4026 0907 00*
	8	14	19	30	4026 0908 00*
	9	15	19	30	4026 0909 00*
	10	16	19	30	4026 0910 00*
	11	17.5	19	30	4026 0911 00*
	12	19	19	30	4026 0912 00*
	13	20	22	30	4026 0913 00*
	14	21	22	30	4026 0914 00*
	16	24	22	30	4026 0916 00*
	17	25	22	30	4026 0917 00*
	18	26	22	30	4026 0918 00*
	19	27.5	22	30	4026 0919 00*
in	5/16	12.5	19	30	4026 0908 00*
	3/8	14.5	19	30	4026 1012 00*
	13/32	15	19	30	4026 0910 00*
	7/16	17	19	30	4026 0911 00*
	15/32	18	19	30	4026 0912 00*
	1/2	19	19	30	4026 1016 00*
	9/16	20	20	30	4026 1018 00*
	3/4	26	26	34	4026 0919 00*

* Available directly from stock.

7.3 Power socket 1/2" square drive

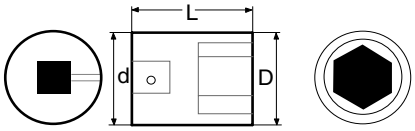

1/2"	Width across flats	D mm	d mm	Overall length L mm	Ordering No.
mm	10	17	25	38	4026 1210 00*
	11	19	25	38	4026 1211 00*
	12	20	25	38	4026 1212 00*
	13	21	25	38	4026 1213 00*
	14	22	25	38	4026 1214 00*
	16	25	30	38	4026 1216 00*
	17	26	30	38	4026 1217 00*
	18	27.5	30	38	4026 1218 00*
	19	29	30	38	4026 1219 00*
	21	32	30	38	4026 1221 00*
	22	32	30	38	4026 1222 00*
	24	35	30	45	4026 1224 00*
	27	39	30	50	4026 1227 00*
in	3/8	16	22	38	4026 1312 00
	7/16	18	22	38	4026 1211 00*
	1/2	20	22	38	4026 1316 00*
	9/16	22	24	38	4026 1318 00*
	3/4	28	28	38	4026 1219 00*
	15/16	35	30	45	4026 1224 00*
	1 1/8	40	38	40	4026 1336 00

7.4 Power socket 3/4" square drive

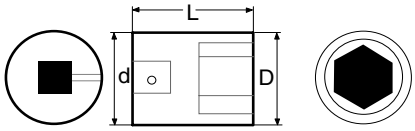

3/4"	Width across flats	D mm	d mm	Overall length L mm	Ordering No.	Pin[a] and O-ring ref. letter
mm	18	32	44	50	4026 1918 00*	A
	19	33	44	50	4026 1919 00*	A
	21	36	44	50	4026 1921 00*	A
	22	37	44	50	4026 1922 00*	A
	24	40	44	52	4026 1924 00*	A
	27	43	44	54	4026 1927 00*	A
	30	47	44	54	4026 1930 00*	A
	32	49	44	56	4026 1932 00*	A
	34	52	44	56	4026 1934 00*	A
	36	54	44	55	4026 1936 00*	A
in	3/4	33	44	50	4026 1919 00*	A
	15/16	40	44	52	4026 1924 00*	A
	1 1/8	42	44	52	4026 2036 00*	A
	1 5/16	47	44	56	4026 2042 00*	A
	1 1/2	53	44	56	4026 2048 00*	A

[a] Pin and o-ring see table 13.

7.5 Power socket 1" square drive

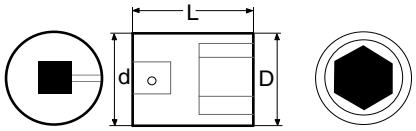

1"	Width across flats	D mm	d mm	Overall length L mm	Ordering No.	Pin[a] and O-ring ref. letter
mm	24	42	54	58	4026 2524 00*	C
	27	46	54	58	4026 2527 00*	C
	30	50	54	60	4026 2530 00*	C
	32	52	54	60	4026 2532 00*	C
	34	55	54	60	4026 2534 00*	C
	36	57	54	65	4026 2536 00*	C
	41	64	54	67	4026 2541 00*	C
	46	69.5	54	74	4026 2546 00*	C
	50	75	54	80	4026 2550 00*	C
	55	81	54	84	4026 2555 00*	C
	60	87	54	87	4026 2560 00*	C
	65	93	54	90	4026 2565 00*	C
in	15/16	42	54	58	4026 2524 00*	C
	1 1/8	46	54	58	4026 2636 00	
	1 5/16	53	51	62	4026 2642 00	
	1 1/2	58	52	62	4026 2648 00*	
	1 11/16	65	52	64	4026 2654 00	
	1 7/8	70	58	66	4026 2660 00	
	2 1/16	75	58	76	4026 2666 00	

[a] Pin and o-ring see table 13.

7.6 Power socket 1 1/2" square drive

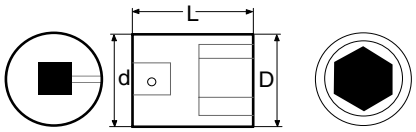

1 1/2"	Width across flats	D mm	d mm	Overall length L mm	Ordering No.	Pin[a] and O-ring ref. letter
mm	50	81.5	86	87	4026 3850 00*	F
	55	87.5	86	90	4026 3855 00*	F
	60	94	86	95	4026 3860 00*	F
	65	100	86	100	4026 3865 00*	F
	70	106	86	105	4026 3870 00*	F
	75	112	86	110	4026 3875 00*	F
	80	119	86	116	4026 3880 00	F

[a] Pin and o-ring see table 13.

8. STUD SETTER

8.1 Stud setter

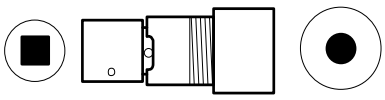

Square drive in	Ordering No.	Holder drive nut	Ordering No.
1/2	4023 0752 80	M6	4023 0761 00*
		M8	4023 0762 00*
		M10	4023 0756 00*
		M12	4023 0757 00

8.2 Stud setter, complete unit

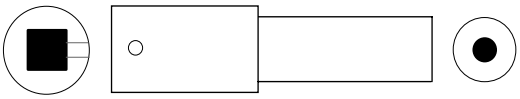

Square drive in	Overall length mm	Body diameter mm	Thread	Ordering No.
3/8	55	19	M6	4023 0752 06*
3/8	55	19	M8	4023 0752 08*
1/2	65	24	M10	4023 0752 10*
1/2	65	24	M12	4023 0752 12*

* Available directly from stock.

9. POWER SOCKET SETS

A complete kit, containing 8 power sockets with 1/2" square drive, delivered in a handy box.

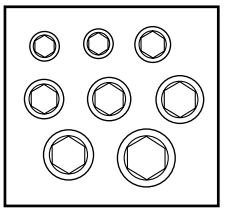

Square drive in	Width across flats	Ordering No.
1/2	13, 16, 17, 18 19, 21, 22, 24	4112 0607 80

10. UNIVERSAL JOINTS

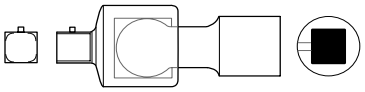

Male square in	Square drive in	Diameter mm	Length mm	Ordering No.	Pin[a] and O-ring ref. letter
3/8	3/8	23	60	4023 1182 00*	
1/2	1/2	29	76	4023 0745 00*	
5/8	5/8	38	69	4023 0875 00	
3/4	3/4	46	89	4023 0857 00	B
1	1	60	112	4023 1060 00	C
1 1/2	1 1/2	84	162	4023 1316 00	F

[a] Pin and o-ring see table 13.

11. SOCKET ADAPTERS

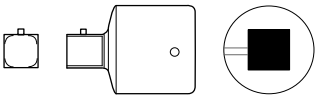

Male square in	Square drive in	Diameter mm	Length mm	Ordering No.	Pin[a] and O-ring ref. letter
1/2	3/8	23	35	4023 1153 00	
3/8	1/2	24	39	4023 1154 00	
5/8	1/2	29	43	4023 1155 00	
1/2	5/8	32	49	4023 0733 00	
3/4	5/8	38	54	4023 1156 00	
1/2	3/4	38	57	4023 0909 00	A
1	3/4	44	65	4023 1157 00	B
3/4	1	54	75	4023 0868 00	C
1	1 1/2	83	100	4023 1314 00	F

[a] Pin and o-ring see table 13.

BITS AND POWER SOCKETS

12. EXTENSIONS

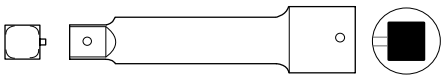

Male square in	Square drive in	Diameter mm	Length mm	Ordering No.	Pin[a] and O-ring ref. letter
3/8	3/8	21	152	4023 1164 06*	
1/2	1/2	27	127	4023 0734 00*	
1/2	1/2	27	254	4023 0735 00*	
5/8	5/8	33	152	4023 0749 00*	
3/4	3/4	38.5	178	4023 0854 00*	A
3/4	3/4	38.5	330	4023 0855 00*	A
1	1	54	178	4023 0751 00*	C
1	1	54	330	4023 0867 00*	C
1 1/2	1 1/2	88	330	4023 1315 00*	G

[a] Pin and o-ring see table 13.

13. LOCKING PINS AND O-RINGS FOR 7.4, 7.5, 7.6, 10, 11, 12

Ref. letter	Locking pin Diameter mm	Locking pin Length mm	O-ring Dia-meter mm	O-ring Inner diameter mm	Pin and O-ring Ordering No.
A[b]	4	35	5	33	4026 5000 90*
B	4	45	5	33	4026 5000 91*
C	5	45	6	44	4026 5000 92*
D	5	60	6	59	4026 5000 93*
E	5	70	6	65	4026 5000 94*
F	6	75	6	65	4026 5000 95*
G	6	75	6	79	4026 5000 96*
H	6	95	6	94	4026 5000 97*

[b] B type pin also included.

14. POWER SOCKET HOLDERS

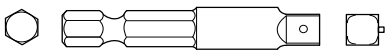

Hex in	Square in	Length mm	Ordering No.
1/4	1/4	50.8	4023 0686 00*
1/4	1/4	76.2	9721 4234 00*
1/4	1/4	101.6	4023 0687 00*
1/4	1/4	152.4	4023 1203 00*
1/4	3/8	50.8	4023 0907 00*
1/4	3/8	76.2	9721 4235 00*
1/4	3/8	101.6	4023 1204 00*
7/16	3/8	76.2	4023 1210 03*
7/16	1/2	70.0	4023 1211 03*

* Available directly from stock.

15. BITHOLDER FOR INSERT BITS

15.1 Type A

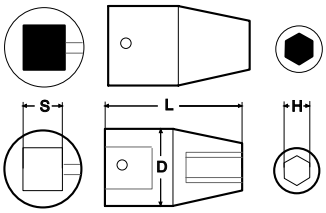

Square S in	Hex H in	Magnetic	Diameter D mm	Length L mm	Ordering No.
3/8	1/4	No	19	33	4023 0793 00*
3/8	5/16	No	19.9	33	4023 0948 00*
1/2	1/4	No	22.1	37.8	4023 1446 06*
1/2	5/16	No	23.8	38.1	4023 0725 00*

15.2 Type B

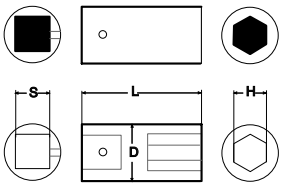

Square S in	Hex H in	Magnetic	Diameter D mm	Length L mm	Ordering No.
1/4	1/4	No	12	25.2	4023 0695 00*

15.3 Type C

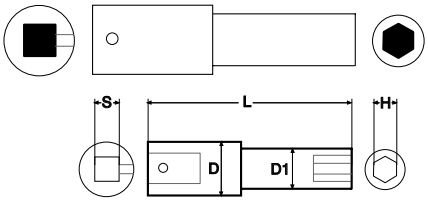

Square S in	Hex H in	Magnetic	Diameter D mm	Diameter D1 mm	Length L mm	Ordering No.
1/4	1/4[a]	Yes	12.6	11.1	58	4023 1448 01*
3/8	1/4	Yes	16.9	11.1	52.4	4023 1448 02*
1/2	1/4	Yes	22.3	14.9	38.3	4023 1448 04

[a] With front nut.

16. QUICK CHANGE CHUCK FOR POWER BITS

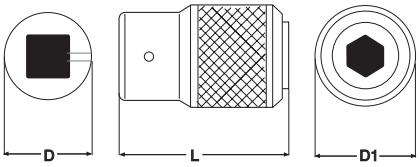

Square drive in	Female hex in	Diameter D mm	Diameter D1 mm	Length L mm	Ordering No.
3/8	1/4	22	20	45	4023 1380 00*
3/8	5/16	22	33	55	4023 1382 00*
3/8	7/16	22	33	55	4023 1317 80*
1/2	7/16	29	33	55	4023 0737 00*

* Available directly from stock.

TORQUE ARMS
Parallel arm

SM A1 – Parallel arm for 50 Nm

Atlas Copco torque arm SM A1 is an excellent means of assistance when using hand-held straight or pistol grip tools e.g. screwdrivers, nutrunners, thread inserts etc.

The torque arms in the SM A1 series are made for heavy duty applications where the tool torque is limited to 50 Nm.

Tool weight should be in the range 1 to 4 kg. In order to balance the tool weight in a proper and durable way the arms are equipped with gas spring cylinders.

A table stand is included as standard. Tool holder and table stand clamp have to be ordered separately.

SM A1 (mm)

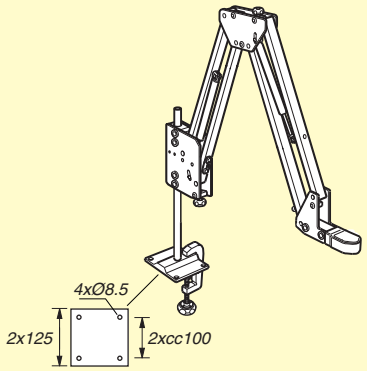

(mm)

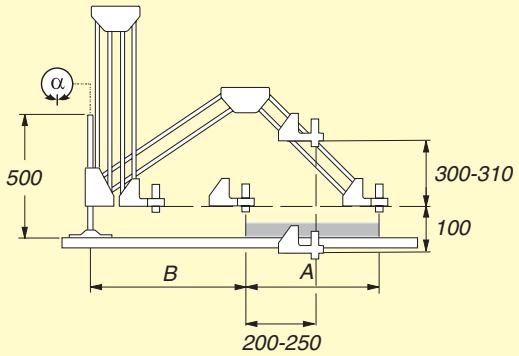

Model	Tool weight kg	Tool weight lb	Tool torque Nm	Tool torque ft lb	Tool diameter mm	Working range A mm	Working range B mm	alfa	Ordering No.
SM A1-400-2	1-2	2.2-4.4	50	36.88	40-60	0-400	600	360°	8202 9000 15*
SM A1-400-3	2-3	4.4-6.6	50	36.88	40-60	0-400	600	360°	8202 9000 16*
SM A1-400-4	2.5-4	5.5-8.8	50	36.88	40-60	0-400	600	360°	8202 9000 19*
SM A1-500-2	1-2	2.2-4.4	50	36.88	40-60	0-500	700	360°	8202 9000 17*
SM A1-500-3	1.5-3	3.3-6.6	50	36.88	40-60	0-500	700	360°	8202 9000 18*

OPTIONAL

Tool holders and accessories for SM A1

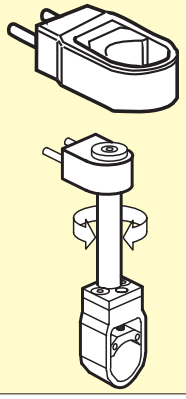

Description	Ordering No.
Adjustable vertical tool holder	
Ø 40-50 mm	4390 1735 07*
Ø 50-60 mm	4390 1735 08*
Horizontal turnable tool holder	
Ø 40-50 mm	4390 1735 09*
Ø 50-60 mm	4390 1735 35

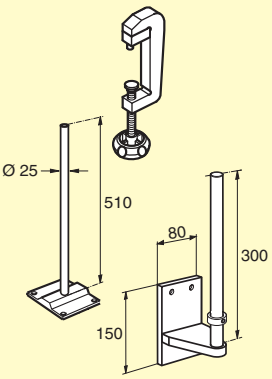

Description	Ordering No.
Heavy duty 22-82 mm table stand clamp	4390 1734 02*
Wall mounted stand with four 8.5 mm mounting holes	4390 1735 50
Table stand 510 mm	4390 1735 33

Accessories check list:
- Tool holder?
- Table stand clamp?

* Available directly from stock.

TORQUE ARMS
Parallel arm

SM S2 – Parallel arm for max 20 Nm

Atlas Copco torque arm SM S2 is an excellent means of assistance when using hand-held straight or pistol grip tools e.g. screwdrivers, nutrunners, thread inserts etc.

Torque arm SM S2 is recommended when there is a lot of free space and a large working area is required. The SM S2 is exceptionally easy to position and handle. The design is intended for heavy duty operations over a long period of time. The open angle between jib and arm should not exceed 120°.

Tool weights should be in the range 0 to 2.5 kg. In order to handle weights in the range 1-2.5 kg special springs are supplied as standard.

A table stand is included as standard. Tool holder and table stand clamp have to be ordered separately.

SM S2 (mm)

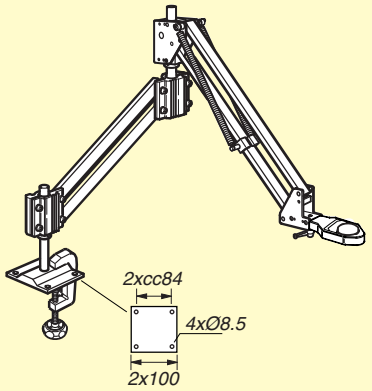

(mm)

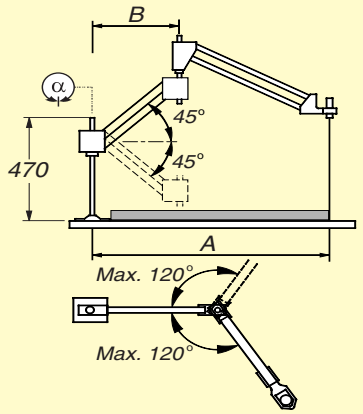

Model	Tool weight Max. kg	Tool weight Max. lb	Tool torque Nm	Tool torque ft lb	Tool diameter mm	Working range A mm	Working range B mm	alfa	Ordering No.
SM S2-750	2.5	5.5	20	14.75	25-50	0-750	410	360°	8202 9000 12*
SM S2-900	2.5	5.5	20	14.75	25-50	0-900	410	360°	8202 9000 21*

OPTIONAL

Tool holders and accessories for SM S2 and SM A2 (to be continued on page 154)

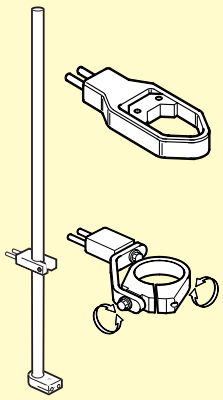

Description	Ordering No.
Adjustable vertical tool holder	
Ø 25-40 mm	4390 1734 04*
Ø 40-50 mm	4390 1734 05*
Two-axis turnable tool holder with adjustable turning torque	
Ø 36 mm	4390 1734 06*
Ø 38 mm	4390 1735 34*
Ø 46 mm	4390 1734 07*
Ø 56 mm	4390 1735 36*
Vertical extension for SM A2/SM S2 700 mm	4390 1735 46*
Vertical telescope extension for SM A2/SM S2 400 mm-750 mm	4390 1735 47

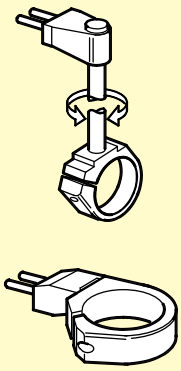

Description	Ordering No.
Horizontal turnable tool holder	
Ø 36 mm	4390 1735 10*
Ø 38 mm	4390 1735 03*
Ø 46 mm	4390 1735 05*
Ø 56 mm	4390 1735 37
Vertical tool holder	
Ø 36 mm	4390 1735 04*
Ø 38 mm	4390 1735 30*
Ø 46 mm	4390 1735 00*
Ø 56 mm	4390 1735 38*

* Available directly from stock.

TORQUE ARMS
Parallel arm

SM A2 – Parallel arm for max 20 Nm
Atlas Copco torque arm SM A2 is an excellent means of assistance when using hand-held straight or pistol grip tools e.g. screwdrivers, nutrunners, thread inserts etc.

Torque arms in the SM A2 series are recommended when there is a lot of equipment on the working bench and the space is limited. The SM A2 is exceptionally easy to position and handle. The design is intended for heavy duty operations over a long period of time. Tool torque should not exceed 20 Nm.

Tool weight should be in the range 0 to 2 kg for SM A2-300 and 0 to 2.5 kg for SM A2-400.

A table stand is included as standard. Tool holder and table stand clamp have to be ordered separately.

SM A2 (mm)

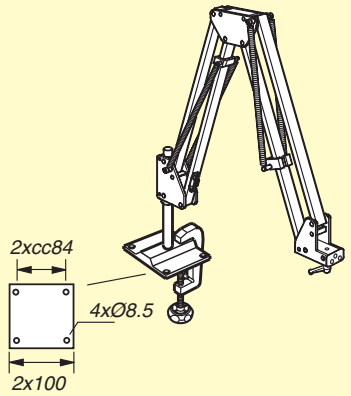

(mm)

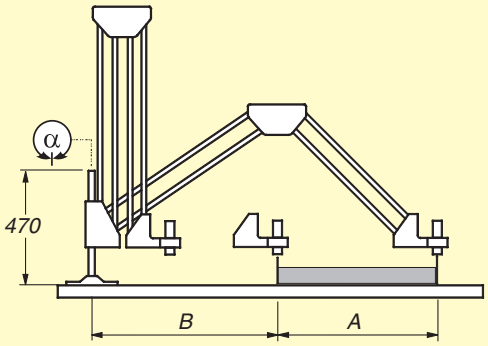

Model	Tool weight Max. kg	Tool weight Max. lb	Tool torque Nm	Tool torque ft lb	Tool diameter mm	Working range A mm	Working range B mm	alfa	Ordering No.
SM A2-Complete[a]	2	4.4	20	14.75	25-40	0-300	400	360°	8202 9000 20*
SM A2-300	2	4.4	20	14.75	25-50	0-300	400	360°	8202 9000 10*
SM A2-400	2.5	5.5	20	14.75	25-50	0-400	450	360°	8202 9000 11*

[a] SM A2-Complete includes adjustable vertical tool holder Ø 25-40 mm and a heavy duty 22-82 mm table stand clamp.

OPTIONAL
Tool holders and accessories for SM A2 and SM S2 (continued from page 153)

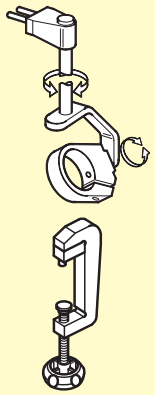

Description	Ordering No.
Horizontal two-axis turnable tool holder	
Ø 36 mm	4390 1735 11*
Ø 38 mm	4390 1735 02*
Ø 46 mm	4390 1735 06*
Ø 56 mm	4390 1735 39
Heavy duty 22-82 mm table stand clamp	4390 1734 02*

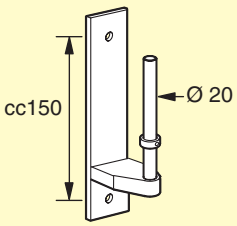

Description	Ordering No.
Wall mounted stand with two 8.5 mm mounting holes	4390 1734 01*

Special adapters for Atlas Copco screwdrivers, see page 160.

Accessories check list:

- Tool holder?
- Wall mounted stand?
- Table stand clamp?
- Special adapters?

* Available directly from stock.

TORQUE ARMS
Telescopic reaction arm

SMC – Telescopic reaction arm

Atlas Copco's range of SMC arms offers outstanding ergonomics and flexibility to help ease your production, as well as lowering health and safety related costs.

- Built with the best carbon fibre rods on the market – unbeatable stiffness-to-weight ratio – for lightness.
- Strong construction in the highest grade aluminum (AA7075) – for durability.
- Bearings and carbon fibre designed for the lowest possible friction and maximum flexibility.
- The SMC arms are eqipped with an aluminium bracket that can easily be fitted to all flat surfaces.
- For fixation on tubes a holder for bench stand can be purchased separately.
- Atlas Copco recommends using a tool balancer together with the arm to carry the weight of the tool.

Working area

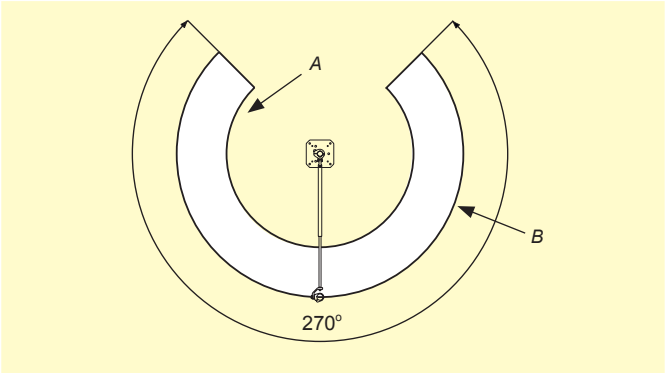

Model	Tool holder type	Tool holder dia. mm	Stroke A	Stroke B	Ordering No.
SMC 12 - Tensor	Special holder designed for Tensor DL and SL 21	36	552	1165	8202 9001 12
SMC 12 - Universal	Adjustable holder designed to fit a variety of tools	25 - 46	552	1165	8202 9001 13
SMC 25 - Tensor	Special holder designed for Tensor tools with 36 mm diameter	36	587	1152	8202 9001 22
SMC 25 - Universal	Adjustable holder designed to fit a variety of tools	25 - 46	587	1152	8202 9001 23

OPTIONAL ACCESSORIES

Model	Description	Ordering No.
Holder for bench stand	Attachment that can be used to attach torque arm to any circular pole with diameter 25 - 46 mm.	4390 1729 00
Bench stand	Bench stand with height 753 mm. Holder must be ordered separately, Ordering No. 4390 1729 00.	4390 1728 00
Table clamp	Clamp for heavy duty applications, 22 - 82 mm	4390 1734 02

Holder for bench stand

Table clamp

Bench stand

Tool balancers

Model	Capacity range kg	Capacity range lb	Cable length m	Ordering No.
COL1 01	0.7-1.3	1.5 - 2.9	1.7	8202 0750 01
RIL2C	0.4-1.0	0.9 - 2.2	1.5	8202 0701 19
RIL4C	1.0-2.0	2.2 - 4.4	1.5	8202 0702 18
RIL5C	1.4-2.3	3.0 - 5.0	1.5	8202 0703 25

TORQUE ARMS
Linear arm

SML – Linear torque arms

By mounting your assembly tool on a SM-Linear torque arm the payback begins immediately and continues throughout the duration of your assembly process. All components are available as standard, allowing fast delivery and quick installation. Each model comes complete with appropriate balancing system to support the weight of the tool, and the flexibility offered by movement in 3-axis allows the user to ease the arm effortlessly around the workstation.

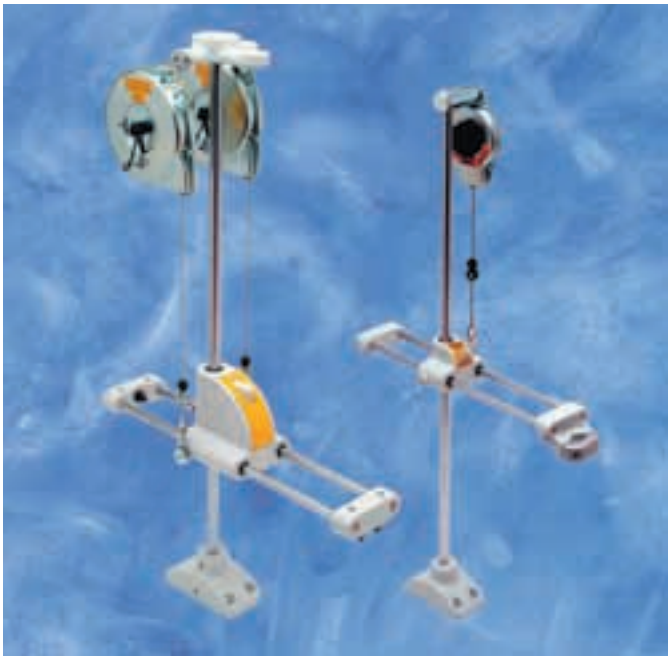

Working area

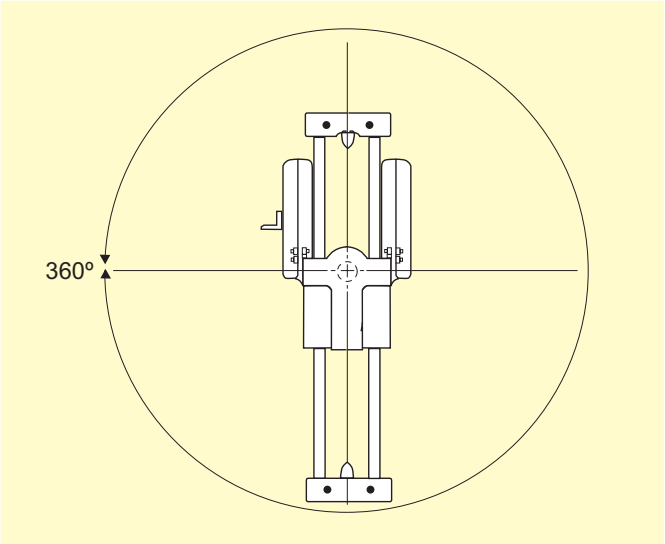

Model	Tool weight kg	Tool weight lb	Weight kg	Weight lb	Max torque Nm	Max torque ft lb	Horizontal stroke mm	Vertical stroke mm	Height mm	Ordering No.
SML 10	1.1	2.4	3.1	6.8	10	7	300	380	722.5	8202 9003 00
SML 40	3.1	6.8	5.1	11.2	40	29.5	300	370	707	8202 9003 01
SML 80	7.4	16.3	8.9	19.6	80	59	360	390	910	8202 9003 08
SML 150	6.9	15.2	17.5	38.6	150	111	330	520	1012	8202 9003 02
SML 300	11.9	26.2	19.2	42.3	300	221	330	520	1012	8202 9003 03
SML 500	22.1	48.7	27.0	59.5	500	369	480	500	1752	8202 9003 04
SML 1000	40.0	88.2	34.0	75.0	1000	738	480	500	1752	8202 9003 05

TORQUE ARMS
Linear arm

ACCESSORIES

Description	Ordering No.
Mounting plate – Spline type 1	4390 1760 00
Mounting plate – Spline type 1 (for SML 10/40)	4390 1788 00
Mounting plate – Spline type 2	4390 1761 00
Mounting plate – Spline type 2 (for SML 10/40)	4390 1787 00
Mounting plate – Spline type 3	4390 1762 00
Mounting plate – Spline type 4	4390 1763 00
Mounting plate – Spline type 5	4390 1764 00
Mounting plate – Spline type 6	4390 1765 00
Mounting plate – Spline type 7	4390 1766 00
Mounting plate – QMX/ETX42	4390 1781 00
Mounting plate – QMX/ETX50	4390 1782 00
Mounting plate – QMX/ETX62	4390 1783 00
Mounting plate – QMX80/ETX72	4390 1784 00
Mounting plate – QMX90/ETX90	4390 1785 00
Horizontal adapter (handle mount)	4390 1770 00
Vertical adapter (handle mount)	4390 1769 00
Start handle (electric, 1 signal)	4390 1772 00
Start handle (electric, 2 signal)	4390 1773 00
Start handle (pneumatic)	4390 1771 00
Handgrip (dead handle)	4390 1786 00
Extension mounting plate (for extended reach)	4390 1768 00
Remote start cable, 3 m	4390 1774 00
Remote start cable, 5 m	4390 1775 00
Remote start cable, 10 m	4390 1776 00
Extension remote start cable, 10 m	4390 1778 00
Extension remote start cable, 15 m	4390 1779 00
Y– piece connector (for 2 x electric handles)	4390 1777 00

NOTE:
- All models are supplied complete with suitable balancers (air cylinder with SML 500/1000).
- SML 10/40 are supplied with integrated tool holder as standard. If additional accessories such as handles are required, then relevant accessory mounting plate should also be ordered. (Suitable for tools with splined front part only).
- All mounting plates compatible with models SML 150, 300, 500 and 1000.
- Extension mounting plates are not compatible with SML 10/40 arms.
- For forward and reverse tool operation, a 2 signal handle is required (electric tools only).

INSTALLATION PROPOSALS

ACCESSORIES

Mounting plate

Extended mounting plate

Vertical adapter

Horizontal adapter

Start handle

TORQUE ARMS

Tracker arms

- **Traceability** – The Tensor Tracker SL enables a complete traceability loop of your assembly sequence. Together with your transducerized SL tool, you ensure that the correct torque is applied exactly at the correct place
- **Forced order** – Work in a predetermined sequence.
- **Free order** – Unlock the tightening system at the correct position.
- **Work pieces** – The Tensor Tracker SL handles 20 different Jobs (7 for the DL) to account for different product confi gurations.
- **Superior mechanics** – The arm of the Tensor Tracker has been designed to offer superior handling capacity for the operator.
- **Minimal set-up time** – Flip the switch to Learn mode, perform a complete tightening sequence, flip the switch back and the system is ready for operation.

How to order:

1. Select appropriate Tensor screwdriver system, SL or DL.
2. Select arm. Tensor Tracker SL for Tensor SL and Tensor Tracker DL for Tensor DL. Arm comes complete with mechanics, Tracker panel box and cables.

   The mechanical arm version is delivered for mounting of Tensor DL/SL. For other tools please order tool holders separately.

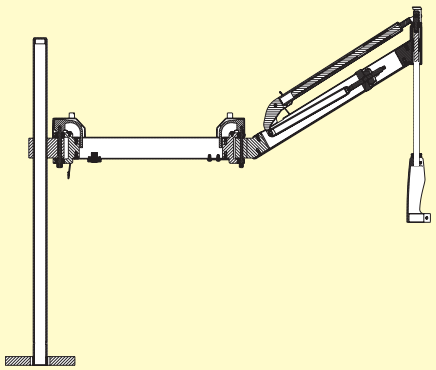

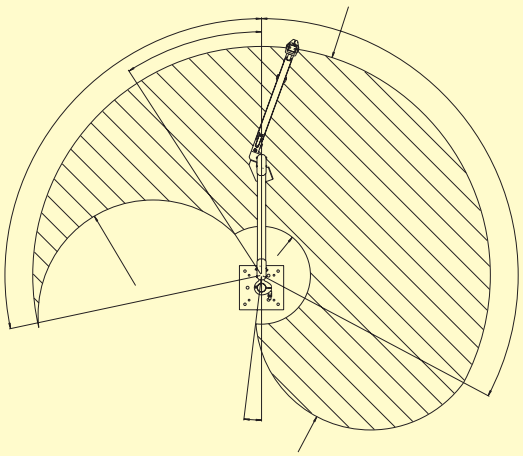

Model	Description	Used with	Ordering No.
TTT10-SL	Tensor Tracker SL – Table	Tensor SL	8433 0900 45
TTT10-DL	Tensor Tracker DL – Table	Tensor DL	8433 0900 25
TTW10-SL	Tensor Tracker SL – Wall	Tensor SL	8433 0900 50
TTW10-DL	Tensor Tracker DL – Wall	Tensor DL/SL	8433 0900 30
TAT10	Torque Arm Table (mech. only)	Tensor DL/SL, ELI, LUM	8433 0900 05
TAW10	Torque Arm Wall (mech. only)	Tensor DL/SL, ELI, LUM	8433 0900 10

Tool holders for mechanical torque arm

Description	Used with	Ordering No.
Holder	LUM 12	4220 2724 04
Holder	Eliza	4220 2776 85

TORQUE ARMS
MicroTorque

GHP – Torque arm for MicroTorque range

Atlas Copco GHP torque arm is an excellent means of assistance when using hand-held or fixtured straight microtorque screwdrivers.

Torque arm GHP Mini is recommended with screwdrivers below 100 Ncm, and GHP Small below 200 Ncm.

The GHP torque arms is exceptionally easy to position and handle. The design is intended for low torque applications and work tasks over a long period of time. Comes with appropriate balancing system to support the weight of the tool.

GHP Mini

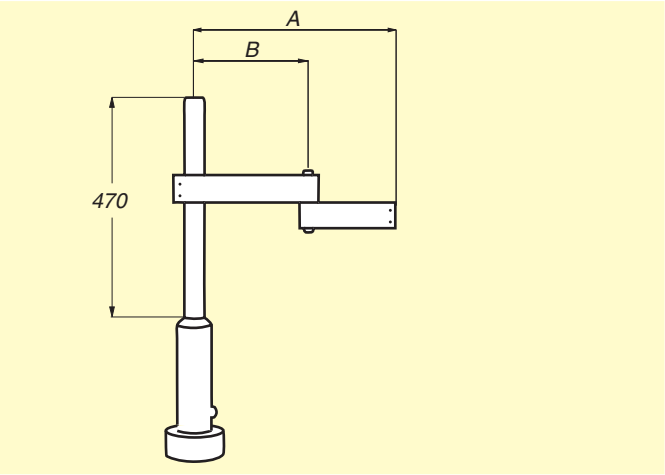

GHP Small/GHP Large

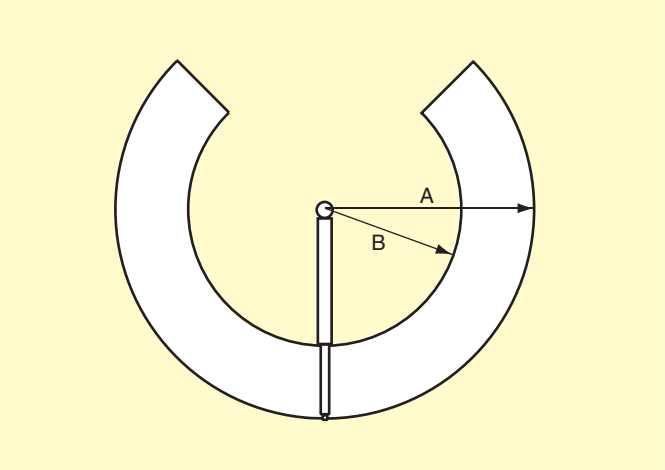

Model	Working range, mm A	Working range, mm B	Stroke mm	alfa	Ordering No.
GHP Mini	280	150	200	270°	8432 0830 02
GHP Mini Clean room	280	150	200	270°	8432 0830 92
GHP Small	460	250	400	270°	8432 0830 03
GHP Large	500	250	730	270°	8432 0830 04

Adapters

Description	Ordering No.
Adapter between GHP Mini and ETF 5, 10, 20	8432 0830 70
Adapter between GHP Mini and ETD M 03/05/10A	8432 0831 81
Adapter between GHP Mini and ETD M25AVB	8432 0830 83
Adapter between GHP Small and ETF 50, 80, 100, 200	8432 0830 72
Adapter between GHP Small and ETD M-L	8432 0830 73
Adapter between GHP Large and ETF 400, 500, 800	8432 0830 74
Universal adapter for GHP Small (LUM, EBL, DL, SL)	8432 0831 80

Handles

Description	Ordering No.
Handle between GHP Mini and ETF 05, 10, 20	8432 0830 90
Handle between GHP Small and ETF 50, 100, 200	8432 0830 53
Handle between GHP Large and ETF 400, 500, 800	8432 0830 54

TORQUE ARMS
Accessories

Special adapters for Atlas Copco screwdrivers.
To be used with torque arms SM S2, SM A2.

Description	Ordering No.
Adapter for Atlas Copco screwdriver LUM10 PR[a]	4390 1734 09*
Adapter for Atlas Copco screwdriver ELI[a]	4390 1734 08*
Adapter for Atlas Copco screwdriver LUM21 PR-P[a]	4390 1735 44*
Adapter for Atlas Copco screwdriver LUM21 SR[b]	4390 1735 45*

Description	Ordering No.
Adapter for Atlas Copco screwdriver LUM22 SR[b]	4390 1735 51*
Adapter for Atlas Copco screwdriver LUM12 SR[a]	4390 1735 52*
Adapter for Atlas Copco screwdriver LUM12 PR[a]	4390 1735 53*
Adapter for Atlas Copco screwdriver LUM22 PR[a]	4390 1735 54*

* Available directly from stock.

Tool holder diameter for Atlas Copco screwdrivers

LUM25 HRF-U	38 mm
LUF20 PR	36 mm

[a] To be used together with a Ø 46 mm tool holder.
[b] To be used together with a Ø 56 mm tool holder.

Quality Assurance in Tightening

Quality assurance – your competitive edge!

A loose or improperly tightened joint in any assembly operation can cause serious problems and have far-reaching consequences for end-users and manufacturers alike.

To ensure the right quality of your company's products, Atlas Copco has developed a comprehensive quality assurance system to meet torque, angle and pulse measurement requirements for all types of fastening tools.

Contents **Page**

ACTA 400 162
ACTA 3000 163
ToolsTalk ACTA 163
BLM 5000 164
BLM Torque Supervisor 164
QRTT transducers 165
IRTT transducers 165
SRTT transducers 166
MRTT transducers 166
ACTA MT transducers 168
BLM TPT, µ-Tester 170
BLM LABwrench 171
BLM LABwrench Gyro 172
BLM LINEwrench 173
BLM Joint Simulator Bench 3860 / 3890 174

ACTA 400
The ACTA 400 provides you with “Easy to use” torque measurement equipment, which is the perfect solution if you do not need a complete tool management system.

ACTA 400 TT, Torque tester
The ideal solution for testing lower torque assembly tools. The ACTA 400 TT has an integrated torque transducer. With the exchangeable test joints on top, the system is complete.

ACTA 400 IT, Inline tester
This is the flexible solution. ACTA 400 IT can connect to all Atlas Copco transducers to measure dynamic and static torque. With the small, portable ACTA 400 IT unit you can also perform a quick and easy check of your tools’ performance directly on the applications.

Data storage
The ACTA 400 has a data memory recording 200 time-stamped measurements. With the included PC software, data can be transferred to your computer via the USB interface for printing or storage in Excel.

ACTA 400 TT

Model	Measure range Nm	Measure range ft lb	Ordering No.
ACTA 400 TT 1-06	0.2 - 1	0.15 - 0.7	8092 1173 01
ACTA 400 TT 4-06	0.8 - 4	0.6 - 3.0	8092 1173 04
ACTA 400 TT 12-06	2.4 -12	1.8 - 8.9	8092 1173 12
ACTA 400 TT 30-10	6 -30	4.4 - 22	8092 1173 30

Test joints ACTA 400 TT

Screw	Range Nm	Range ft lb	Stiffness	Ordering No. Test joint	Ordering No. Service kit**
M4	1	0.7	Soft	4145 0984 80*	4081 2039 90*
M4	1	0.7	Hard	4145 0984 83	-
M6	4	3.0	Soft	4145 0984 82*	4081 2040 90*
M6	4	3.0	Hard	4145 0984 85	-
M6	12	8.9	Soft	4145 0985 80*	4081 2041 90*
M6	12	8.9	Hard	4145 0985 82	-
M8	12	8.9	Soft	4145 0985 81	4081 2042 90
M8	12	8.9	Hard	4145 0985 83	-
M8	30	22	Soft	4145 0986 80*	4081 2043 90*
M8	30	22	Hard	4145 0986 82	-
M10	30	22	Soft	4145 0986 81	4081 2044 90
M10	30	22	Hard	4145 0986 83	-

* Included with the ACTA 400 TT.
** 5 screws and 5 nuts are included in the kit.

ACTA 400 IT

Model	Ordering No.
ACTA 400 IT	8092 1172 20

ACCESSORIES for ACTA 400 TT / IT

	Ordering No.
ACTA 400 TT Aluminum carry case	4222 1200 00
ACTA 400 IT Aluminum carry case	4222 1200 01

ACTA 3000

The ACTA 3000 complemented by the PC program ToolsTalk ACTA provides you with a complete tool database in which you have easy access to all the information you need regarding torque measuring and analysing. The system cuts tool administration costs and systematically controls the status of your tools during their entire life cycle. It keeps track of tightening data, calibration data, service history, application analyses, purchase details, supplier information, etc. It controls and reminds when it is time for tool calibration and/or preventive maintenance (PM).

All data stored per tool in one place!

ACTA 3000 comes in three different models and can be upgraded depending on your needs:

Basic

Measures torque and angle. You can calibrate your tools and check basic statistics.

QC – Quality Control

Calculates all advanced statistics, including SPC, and has a database of up to 1000 tools/joints. This database includes information regarding tool programming, tightening and events.

AA – Advanced Analysis

This is the complete quality system. It offers all the above and shows an advanced tightening trace for joint analysis.

Model	Ordering No.
ACTA 3000 – Basic	8092 1133 20
ACTA 3000 – QC	8092 1133 30
ACTA 3000 – AA	8092 1133 40

ACTA 3000 software upgrades	Ordering No.
ACTA 3000 software upgrade to generation 2.xx	8092 1147 02
ACTA 3000 software upgrades (including generation 2.xx)	
B to QC (8092 1133 20 to 8092 1133 30)	8092 1149 07
B to AA (8092 1133 20 to 8092 1133 40)	8092 1149 18
QC to AA (8092 1133 30 to 8092 1133 40)	8092 1149 26

ToolsTalk ACTA

The PC program ToolsTalk ACTA completes the quality assurance system to calculate and provide all the information you want regarding your tools. In ToolsTalk ACTA you manage your tools in a tool database, a tightening database and a supplier database. It enables advanced statistics/SPC and graphs.

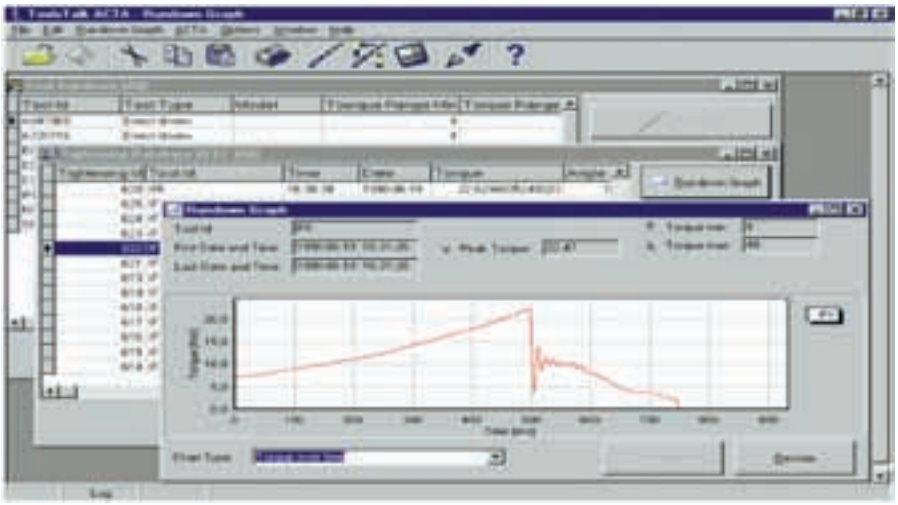

Model	Ordering No.
ToolsTalk ACTA Single PC	8092 1136 01
ToolsTalk ACTA Network 5 users	8092 1136 05
ToolsTalk ACTA Network 10 users	8092 1136 10
ToolsTalk ACTA Network 20 users	8092 1136 20
ToolsTalk ACTA Network 50 users	8092 1136 50

Cable included.
Microsoft Windows NT4, 2000 or XP operating system.

ToolsTalk ACTA software upgrades to generation 2.xx	Ordering No.
1 user	8092 1148 01
5 users	8092 1148 05
10 users	8092 1148 10
20 users	8092 1148 20

QUALITY ASSURANCE IN TIGHTENING

Data Analyzers

BLM 5000

The BLM 5000 Dual Analyzer is the optimal tool for providing threaded fastener quality assurance throughout assembly plants. With two simultaneously read input channels, the user has the ability to evaluate two tightening operations at the same time. Additionally, the BLM 5000 can be used for tool calibration and tightening analysis. It features:

- Runs on a low power PC using Windows CE.
- Equipped with 3 USB ports, RS232 and a network port.
- A clear 10.4" colour touch screen display.
- Calculates minimums, maximums, averages, standard deviation and Cp/Cpk values. The BLM 5000 displays the data collected and the X/R charts.
- Data can be exchanged with Torque Supervisor.
- Can collect data from residual torque checks.
- Analysis of joint/Angle/Preload.
- Simultaneous measurement of the tool transducer and a reference transducer.

- 2 channels simultaneously evaluate multi-spindles. It can be connected to Atlas Copco QRTT/IRTT transducers.
- Two channels simultaneously reading torque/angle rotary transducers in mV/V or preamplified ±5 V.

ACCESSORIES

Model	Description	Ordering No.
BLM 5000 DA	Dual Analyser	8059 0955 50
Additional battery BLM 5000	Li-Ion 10.8V 5,8 Ah	8059 0929 50
Rigid case BLM 5000	Rigid metal case	8059 0929 51
TPT Friction software	Software for friction coefficient μ	8059 0929 52

BLM Torque Supervisor

Software for Tool, Tightening and Joint Analysis

The software BLM Torque Supervisor is the ideal program for handling tool, tightening and joint analysis. It automatically keeps track of calibration due date schedules for power tools and torque wrenches, as well as supervising the complete tool stock within the factory. It manages and collects data from residual torque checks done on the assembly line as well as tool checks done at the tool crib and supervises statistics for each tool and application.

The software can be installed either on a single pc station or on multi factory stations in the factory network.

BLM Torque Supervisor Light

The BLM Supervisor Light is the perfect software for users who want to control their tools in production.

BLM Torque Supervisor Full

The BLM Supervisor Full is the extended software program for tools and tightening management. In addition to the features included in the BLM Torque Supervisor Light, it has a complete Tightening and Joint database. This keeps the user informed of the availability of the direct link between the factory's tools and its applications. It also compiles statistics for specific tool operations on specific joints, including residual torque SPC. Its compatibility with other Atlas Copco BLM instruments makes data sharing possible for analysis and control.

BLM Torque Supervisor Client Server

The BLM Torque Supervisor Client Server is the complete software program for tools and tightening management. With the client server function, it is possible to send information on which tools and/or applications are to be checked from a user's server. Data is automatically sent to each connected Torque Supervisor Client program installed at various stations. Following checks, data is sent back to the Torque Supervisor Server installation where statistical process control (SPC) is automatically performed. All connected stations can thus be updated with new data in real time.

Model	Ordering No.
Torque Supervisor version Full	8059 0981 00
Torque Supervisor version Light	8059 0981 01
Torque Supervisor version Client, installed on JSB	8059 0981 03
Torque Supervisor version Server, installed at server	8060 0981 04
Torque Supervisor upgrade from version Light to Full	8061 0981 06

QRTT

Tranducers used for QMX and ETX nutrunner as well as for fixtured Tensor tool calibration. This transducer enables an easy and fast set-up with highest system accuracy. By using the QRTT, no special test adaptation device between the spindle and the product itself is needed.

Model	Drive square in	For QMX spindle	Rated capacity Nm	Rated capacity ft lb	Ordering No.
QRTT 20 Nm kit	3/8	42	2 - 20	1.5 - 15	8092 1164 13
QRTT 75 Nm kit	3/8	42	7.5 - 75	5.5 - 55	8092 1164 18
QRTT 200 Nm kit	1/2	50	20 - 200	15 - 150	8092 1164 23
QRTT 500 Nm kit	3/4	62	50 - 500	37 - 369	8092 1164 28
QRTT 1000 Nm kit	1	80, 90	100 - 1000	75 - 750	8092 1164 33

IRTT – in-line rotary torque and torque/angle transducers

The ACTA 3000 automatically reads the memory in Atlas Copco IRTT torque transducers. No manual calibration is needed. The IRTT has very high readout accuracy and is available in torque or torque/angle versions.

Model	Drive Hex in	Drive Square in	Rated capacity Nm	Rated capacity ft lb	Ordering No.
Torque models					
IRTT 5-I06	1/4		5	4	8092 1129 05
IRTT 20-I06	1/4		20	15	8092 1129 10
IRTT 20-06		1/4	20	15	8092 1129 15
IRTT 25-10		3/8	25	18	8092 1129 20
IRTT 75-10		3/8	75	55	8092 1129 25
IRTT 180-13		1/2	180	133	8092 1129 30
IRTT 500-20		3/4	500	369	8092 1129 35
IRTT 750-25		1	750	553	8092 1129 40
IRTT 1400-25		1	1400	1033	8092 1129 45

Model	Drive Hex in	Drive Square in	Rated capacity Nm	Rated capacity ft lb	Ordering No.
Torque/angle models					
IRTT 1A-I06	1/2		1	0.8	8092 1130 96
IRTT 2A-I06	1/2		2	1.5	8092 1130 01
IRTT 5A-I06	1/4		5	4	8092 1130 06
IRTT 5A-06		1/4	5	4	8092 1130 08
IRTT 20A-I06	1/4		20	15	8092 1130 11
IRTT 20A-06		1/4	20	15	8092 1130 16
IRTT 25A-10		3/8	25	18	8092 1130 21
IRTT 75A-10		3/8	75	55	8092 1130 26
IRTT 180A-13		1/2	180	133	8092 1130 31
IRTT 500A-20		3/4	500	369	8092 1130 36
IRTT 750A-25		1	750	553	8092 1130 41
IRTT 1400A-25		1	1400	1033	8092 1130 46
IRTT 3000A-38		1	3000	2200	8092 1130 52
IRTT 5000A-38		1 1/2	5000	3685	8092 1130 56

NOTE: All IRTT are equipped with 19-pin connector.

SRTT – stationary reaction torque transducers

The stationary torque transducers are designed for fixturing where a rotary action is not desired during a measurement. All static torque transducers feature a built-in memory for fast auto-calibration with ACTA 400 and ACTA 3000.

Model	Square drive in	Capacity Nm	Capacity ft lb	Ordering No.
SRTT 0.5-06	1/4	0.5	0.4	8092 1143 15
SRTT 2-06	1/4	2	1.5	8092 1143 20
SRTT 5-06	1/4	5	4	8092 1143 25
SRTT 25-10	3/8	25	18	8092 1143 30
SRTT 75-13	1/2	75	55	8092 1143 35
SRTT 180-13	1/2	180	133	8092 1143 40
SRTT 500-20	3/4	500	369	8092 1143 45
SRTT 1400-25	1	1400	1033	8092 1143 50

Test joint for SRTT

Model	Size	Stiffness	Range Nm	Range ft lb	Ordering No.
TJ SRTT H 25-10	3/8	Hard	25	18	4220 2451 80
TJ SRTT S 25-10	3/8	Soft	25	18	4220 2451 81
TJ SRTT H 75-10	1/2	Hard	75	55	4220 2659 80
TJ SRTT S 75-10	1/2	Soft	75	55	4220 2659 81
TJ SRTT H 180-13	1/2	Hard	180	133	4220 2660 80
TJ SRTT S 180-13	1/2	Soft	180	133	4220 2660 81

MRTT – manual wrench torque transducer

Designed to measure static torque on higher torque applications. The torque wrench features an LED indicator for low/OK/high torque. It has a unique square drive, which rotates free and is locked when pushed in.

Model	Square drive in	Capacity Nm	Capacity ft lb	Ordering No.
MRTT 25-06S[a]	3/8	25	18	8092 1145 32
MRTT 75-13S[a]	1/2	75	55	8092 1145 37
MRTT 180-13S[a]	1/2	180	133	8092 1145 42
MRTT-I 680-20S[b]	3/4	680	510	8092 1164 52

[a] Suggested cable 4145 0971 03 (3 m curled cable) see below.
[b] Works only with cable type 4145 0965 03.

MRTT – manual screwdriver torque transducer

The MRTT screwdriver is designed to measure static torque on low torque applications. All MRTTs feature a built-in memory for fast auto-calibration with ACTA 400 and ACTA 3000.

Model	Drive hex in	Capacity Nm	Capacity ft lb	Ordering No.
MRTT 2-I06	1/4	2.5	1.8	8092 1144 21
MRTT 7-I06	1/4	7.5	5.5	8092 1144 26

Transducer cable

The cable needed for all transducers (except MRTT screwdriver where cable is included).

Cables

Length	Ordering No.
1 m	4145 0982 01
3 m	4145 0982 03
5 m	4145 0982 05
3 m curled cable	4145 0971 03

For usage of non Atlas Copco transducers one of the following cables are required.

Model			Ordering No.
Industrial style	Transducer cable 3 m	19 - 4	4145 0965 03
Industrial style	Transducer cable 3 m	19 - 6	4145 0968 03
Industrial style	Transducer cable 3 m	19 - 10	4145 0967 03

Cables for ToolsTalk ACTA

Length	Ordering No.
ToolsTalk ACTA cable 3 m	4222 0546 03
ToolsTalk ACTA cable 5 m	4222 0546 05

ACCESSORIES

Model	Ordering No.
Demo cases	
ACTA 3000	4222 0527 00
ACTA 3000, with solid filling	4222 0527 01
Battery units	
ACTA 3000, 7.2V/3.8 Ah	4222 0368 00
ACTA 3000, 7.2V/9.5 Ah	4222 0927 80
ACTA 3000, 7.2V/15 Ah	4222 0928 80
Battery charger	
ACTA 3000, external charger	4222 0964 80

QUALITY ASSURANCE IN TIGHTENING

MicroTorque transducers

Quality assurance system – sharpening your competitive edge.

To ensure the highest quality of your fastening – and ultimately your company's products – Atlas Copco has developed a comprehensive quality assurance system for micro torques. The controller-cable-transducer package provides fast, accurate and reliable measurement of critical parameters.

ACTA MT Features:

Measures torque and angle. You can calibrate your tools and check basic statistics.

- Auto-recognition of torque/force sensor
- Data transfer via serial interface (RS232-C)
- Graphical recording of data via PC
- Digital peak-value memory
- Multilingual dialog box control
- Overload protection

Model	Capacity Ncm	Capacity in lb	Drive	Overall length mm	Ordering No.
Torque In-Line rotary transducer					
MT TR 2	2	0.18	Ø 3h8 mm	76	8432 0820 29
MT TR 5	5	0.44	Ø 3h8 mm	76	8432 0820 30
MT TR 10	10	0.88	Ø 5h8 mm	76	8432 0820 31
MT TR 20	20	1.77	Ø 5h8 mm	76	8432 0820 32
MT TR 50	50	4.42	1/4"	105	8432 0820 33
MT TR 100	100	8.85	1/4"	105	8432 0820 34
MT TR 200	200	17.70	1/4"	105	8432 0820 35
MT TR 500	500	44.25	1/4"	105	8432 0820 36
Torque/Angle In-Line rotary transducer					
MT TRA 2	2	0.18	Ø 3h8 mm	76	8432 0820 41
MT TRA 5	5	0.44	Ø 3h8 mm	76	8432 0820 42
MT TRA 10	10	0.88	Ø 5h8 mm	76	8432 0820 43
MT TRA 20	20	1.77	Ø 5h8 mm	76	8432 0820 44
MT TRA 50	50	4.42	1/4"	105	8432 0820 45
MT TRA 100	100	8.85	1/4"	105	8432 0820 46
MT TRA 200	200	17.70	1/4"	105	8432 0820 47
MT TRA 500	500	44.25	1/4"	105	8432 0820 48
Stationary torque transducer					
MT TS 1	1	0.09	Ø 3H7	81	8432 0820 18
MT TS 2	2	0.18	Ø 3H7	81	8432 0820 19
MT TS 5	5	0.44	Ø 3H7	81	8432 0820 20
MT TS 10	10	0.88	Ø 3H7	81	8432 0820 21
MT TS 20	20	1.77	1/4"	81	8432 0820 22
MT TS 50	50	4.42	1/4"	98	8432 0820 23
MT TS 100	100	8.85	1/4"	98	8432 0820 24
MT TS 200	200	17.70	1/4"	98	8432 0820 25
MT TS 500	500	44.25	1/4"	111	8432 0820 52
Manual Screwdriver torque transducer					
MT TH 1	1	0.09	Ø 3H7	115	8432 0820 10
MT TH 2	2	0.18	Ø 3H7	115	8432 0820 11
MT TH 5	5	0.44	Ø 3H7	115	8432 0820 12
MT TH 10	10	0.88	Ø 3H7	115	8432 0820 13
MT TH 20	20	1.77	1/4"	115	8432 0820 14
MT TH 50	50	4.42	1/4"	124	8432 0820 15
MT TH 100	100	8.85	1/4"	124	8432 0820 16
MT TH 200	200	17.70	1/4"	124	8432 0820 17

Quality Assurance System

Model	Ordering No.
Controller – ACTA MT	8432 0820 01
Transducer cable	8432 0830 35
Software – Tools Talk ACTA MT, (for graph analys)	8432 0830 46
RS232 cable ACTA MT	8432 0831 39

Fasteners for joint kits

Material designation	Bit Drive	Ordering No.
Lens head screw DIN7985 PH M1.6x4 V2A	PH0	4023 0005 01
Lens head screw ISO14583 M2.0x10 V2A	TX6	4023 0005 02
Lens head screw ISO14583 M2.5x10 V2A	TX8	4023 0005 03
Lens head screw ISO14583 M3.0x10 V2A	TX10	4023 0005 04
Lens head screw ISO14583 M4.0x12 V2A	TX20	4023 0005 05
Lens head screw ISO14583 M5.0x12 V2A	TX25	4023 0005 06
Lens head screw ISO14583 M6.0x12 V2A	TX30	4023 0005 07

Stationary torque transducers accessories

Model	Ordering No.
Joint kit M3.5, 1/4" adapter (200 Ncm)	8431 0830 87
Joint kit M4, 1/4" adapter (300 Ncm)	8431 0830 86
Joint kit M5, 1/4" adapter (500 Ncm)	8431 0830 85
Joint kit M2.5, 1/4" adapter (< 100 Ncm)	8432 0830 77
Joint kit M2, 1/4" adapter (< 50 Ncm)	8432 0830 78
Joint kit M1.6, 3H7 adapter (< 20 Ncm)	8432 0830 79

QUALITY ASSURANCE IN TIGHTENING

Friction coefficient Analyzer

BLM TPT – Torque Preload Transducer

During bolt tightening, the preload achieved depends not just on the torque applied but also on the friction coefficient μ. The friction coefficient may vary, depending on coatings, lubricants, geometry errors, finishing, etc. All these factors dramatically influence joint reliability. It is necessary to check μ in a fast and easy way. The ability to test in the production line also provides an immediate response and reduces the risk of overloading lab resources.

The BLM TPT torque and preload transducer connected to the two channel BLM 5000 analyzer provides a fast and easy evaluation of total μ.

- If μ is too low the preload will be higher than predicted and could generate bolt failure.
- If μ is too high the preload could be low, causing the bolt to come loosen and fail.

BLM TPT transducers are supplied with a complete set of adapters to test bolts of different lengths. Bolts can be tested with the original nut or with standard threaded hardened adapters. The test set-up is simple and fast. With only three transducers (TPT 25, TPT 200 and TPT 2000), it is possible to measure screws from size M3 to M24. The two-channel BLM 5000 analyzer has special software, supplied as an option, for evaluating μ according to the norm EN ISO16047 standard.

The adapter kit provide all needed accessories to test bolts of different diameters, pitches and lengths. Bolts can be tested with the original nut used in production, or with the supplied hardened threaded adapter. Spacers allow testing bolts of different lengths. For each size of bolt, there are three adapter plates available: one flat, one to be used with washers and one designed for customer made plates. Adapter kits 25 and 200 are supplied in a wooden case. For the BLM μ Tester, the adapters are stored in the drawers. The kit for TPT 2000 is supplied in a heavy duty trolley due to the weight and size of the parts.

BLM μ Tester

The BLM μ Tester is a complete set for measuring the friction coefficient. In addition to being used in the tool crib, it can be used along the line for a fast and easy fastener evaluation. The advantages of using a bench are many: portable measuring equipment, “all in one” complete and ready, PC with touch screen, already fixed transducer, adapter kit in the drawer. Built-in battery charger, operating time >16 hours. The μ Tester 25 and 200 can be supplied with additional transducers. It is not possible to have TPT 2000 on a bench due to high torque. If a TPT 2000 is requested, then this transducer must be mounted separately on a fixed table.

BLM μ Tester

Standard adapter kit

Model	Description	Ordering No.
BLM TPT 25 / 25	Torque Preload Transducer 25 Nm, 25 kN	8059 0948 29
BLM TPT 200 / 100	Torque Preload Transducer 200 Nm, 100 kN	8059 0948 51
BLM TPT 2000 / 400	Torque Preload Transducer 2000 Nm, 400 kN	8059 0948 84
Adapters kit for TPT 25 / 25	Standard adapters kit for TPT 25 / 25 (M3 to M6)	8059 0949 00
Adapters kit for TPT 200 / 100	Standard adapters kit for TPT 200 / 100 (M8 to M14)	8059 0949 10
Adapters kit for TPT 2000 / 400	Standard adapters kit for TPT 2000 / 400 (M16 to M24)	8059 0949 20
BLM μ Tester - 25	Mobile Bench for μ Evaluation, includes TPT and adapter kit	8059 0966 00
BLM μ Tester - 200	Mobile Bench for μ Evaluation, includes TPT and adapter kit	8059 0966 10

Atlas Copco BLM LABwrench

The BLM LABwrench enables effective quality control through measurement of residual torque and evaluation of the measurement data. The tool features a clear and easy-to-use graphics/text display.

If your intended use is quality control only (residual torque check), then LABwrench will be ideal for your needs. It has all the features of the LABwrench Gyro, except the gyroscope.

- Graphics/text display together with simple, intuitive software icons.
- Alarm function pre-settable in three different thresholds, with three LED's (yellow, green, red) and buzzer.
- The end head of the LABwrench can be used with reversible ratchet or spanners where a socket cannot be used.
- Serial output RS232 for connection to a printer or PC.
- The LABwrench can work "stand alone" or connected to Torque Supervisor software.

Model	Drive mm	Ratchet in	Capacity Nm	Capacity lb ft	Weight kg	Weight lb	Length L mm	Width w mm	Thickness T mm	Thickness T1 mm	Ordering No.
LAB30-10[a]	9x12	3/8	30	22	1.6	3.5	500	75	40	18	8059 0901 30
LAB50-10[a]	9x12	3/8	50	36	1.6	3.5	500	75	40	18	8059 0901 36
LAB100-13[a]	9x12	1/2	100	73	1.6	3.5	500	75	40	18	8059 0901 45
LAB150-13[a]	14x18	1/2	150	110	2	4.5	570	75	40	22	8059 0901 48
LAB250-13[a]	14x18	1/2	250	180	2	4.5	570	75	40	22	8059 0901 54
LAB400-20	14x18	3/4	400	300	2	4.5	740	75	40	22	8059 0901 60
LAB600-20	21x26	3/4	600	440	3.2	7	1000	75	40	30	8059 0901 66

[a] Not length dependent.

Atlas Copco BLM LABwrench Gyro

The BLM LABwrench Gyro is an advanced, multi-purpose electronic torque/angle wrench capable of performing a variety of functions in lab, quality control and tightening applications.

For **lab use** this includes joint analysis to understand the behaviour and stiffness of the joint, thus obtaining the information needed to check tightening parameters and reproduce the joint on a BLM Joint Simulator Bench or carry out troubleshooting in the case of a critical joint.

Within **quality control** for measuring residual torque automatically.

For **tightening purposes** with different strategy within torque limits, with torque target and angle control, tightening with torque + angle or tightening to yield.

The BLM LABwrench Gyro features an innovative angle rotation measurement system based on an advanced electronic gyroscope requiring no reference arm. The graphic/text display and simple intuitive software with icons make it extremely easy to use.

- Torque/angle measurement. Graphic display to illustrate curves (torque/angle – torque/time)
- The end head of the LABwrench Gyro can be used with reversible ratchet or spanners where socket cannot be used.
- Multi-purpose: joint analysis, quality control or tightening with different strategies.
- Advanced electronic gyroscope for angle measurement.

Model	Drive mm	Ratchet in	Capacity Nm	Capacity lb ft	Weight kg	Weight lb	Length L mm	Width w mm	Thickness T mm	Thickness T1 mm	Ordering No.
LAB30-10G[a]	9x12	3/8	30	22	1.7	3.6	530	75	40	18	8059 0902 30
LAB50-10G[a]	9x12	3/8	50	36	1.7	3.6	530	75	40	18	8059 0902 36
LAB100-13G[a]	9x12	1/2	100	73	1.7	3.6	530	75	40	18	8059 0902 45
LAB150-13G[a]	14x18	1/2	150	110	2.1	4.6	600	75	40	22	8059 0902 48
LAB250-13G[a]	14x18	1/2	250	180	2.1	4.6	600	75	40	22	8059 0902 54
LAB400-20G	14x18	3/4	400	300	2.1	4.6	770	75	40	22	8059 0902 60
LAB600-20G	21x26	3/4	600	440	3.3	7.1	1030	75	40	30	8059 0902 66

[a] Not length dependent.

Atlas Copco BLM LINEwrench

On modern assembly lines there is a need to maintain traceability even during the time it takes to set up the right back-up tool. The BLM LINEwrench provides an immediate back-up that guarantees accuracy and traceability in such situations. Furthermore, fault repair stations at the end of the line have a negative effect on the task of storing the results obtained during production. This is because component loosening and retightening is normally carried out there using mechanical torque wrenches.

The BLM LINEwrench also provides a very good system for tightening joints not accessible to nutrunners as well as a flexible system appropriate for special production of high tech products.

- Security through unique patented socket recognition.
- Wireless communication.
- Integrated barcode scanner.
- End head with reversible ratchet or spanners.
- Angle reading via electronic gyroscope.
- Programming via RS232.
- Various tigthening strategies available.

Model	Drive mm	Ratchet in	Capacity Nm	Capacity lb ft	Weight kg	Weight lb	Length L mm	Width w mm	Thickness T mm	Thickness T1 mm	Ordering No.
LINE R 30-10	9x12	3/8	30	22	1.5	3.5	500	55	45	20	8059 0903 30
LINE R 50-10	9x12	3/8	50	36	1.6	3.6	500	55	45	20	8059 0903 36
LINE R 70-13	9x12	1/2	70	52	1.6	3.6	500	55	45	20	8059 0903 39
LINE R 100-13	9X12	1/2	100	73	1.6	3.6	550	55	45	20	8059 0903 45
LINE R 150-13	14x18	1/2	150	110	2	4.6	550	55	45	24	8059 0903 48
LINE R 250-13	14x18	1/2	250	180	2	4.6	650	55	45	24	8059 0903 54
LINE R 400-20	14x18	3/4	400	300	2.7	4.6	800	55	45	24	8059 0903 60
LINE R 600-20	21x26	3/4	600	440	3.3	7.1	900	55	45	32	8059 0903 66
LINE W 30-10	9x12	3/8	30	22	1.5	3.5	500	55	45	20	8059 0904 30
LINE W 50-10	9x12	3/8	50	36	1.6	3.6	500	55	45	20	8059 0904 36
LINE W 70-13	9x12	1/2	70	52	1.6	3.6	500	55	45	20	8059 0904 39
LINE W 100-13	9X12	1/2	100	73	1.6	3.6	550	55	45	20	8059 0904 45
LINE W 150-13	14x18	1/2	150	110	2	4.6	550	55	45	24	8059 0904 48
LINE W 250-13	14x18	1/2	250	180	2	4.6	650	55	45	24	8059 0904 54
LINE W 400-20	14x18	3/4	400	300	2.7	4.6	800	55	45	24	8059 0904 60
LINE W 600-20	21x26	3/4	600	440	3.3	7.1	900	55	45	32	8059 0904 66
LINE WP 30-10	9x12	3/8	30	22	1.7	3.6	500	70	50	20	8059 0905 30
LINE WP 50-10	9x12	3/8	50	36	1.8	4	500	70	50	20	8059 0905 36
LINE WP 70-13	9x12	1/2	70	52	1.8	4	500	70	50	20	8059 0905 39
LINE WP 100-13	9X12	1/2	100	73	1.8	4	550	70	50	20	8059 0905 45
LINE WP 150-13	14x18	1/2	150	110	2.2	4.8	550	70	50	24	8059 0905 48
LINE WP 250-13	14x18	1/2	250	180	2.2	4.8	650	70	50	24	8059 0905 54
LINE WP 400-20	14x18	3/4	400	300	2.9	4.8	800	70	50	24	8059 0905 60
LINE WP 600-20	21x26	3/4	600	440	3.4	7.5	900	70	50	32	8059 0905 66
LINE WPB 30-10	9x12	3/8	30	22	1.7	3.6	500	70	50	20	8059 0906 30
LINE WPB 50-10	9x12	3/8	50	36	1.8	4	500	70	50	20	8059 0906 36
LINE WPB 70-13	9x12	1/2	70	52	1.8	4	500	70	50	20	8059 0906 39
LINE WPB 100-13	9X12	1/2	100	73	1.8	4	550	70	50	20	8059 0906 45
LINE WPB 150-13	14x18	1/2	150	110	2.2	4.8	550	70	50	24	8059 0906 48
LINE WPB 250-13	14x18	1/2	250	180	2.2	4.8	650	70	50	24	8059 0906 54
LINE WPB 400-20	14x18	3/4	400	300	2.9	4.8	800	70	50	24	8059 0906 60
LINE WPB 600-20	21x26	3/4	600	440	3.4	7.5	900	70	50	32	8059 0906 66

LINE R

LINE R has an embedded set of RS232 contacts.

LINE W

Standard model with WI-FI.

LINE WP

With WI-FI and rubber protection.

LINE WPB

With WI-FI and rubber protection and Bar Code scanner.

BLM Joint Simulator Bench 3860

The BLM Joint Simulator Bench 3860 provides maximum tool evaluation flexibility. DC electric, clutch, impulse and battery tools as well as torque wrenches can be evaluated. The hydraulic brakes simulate the behaviour of a real joint, reproducing the stiffness from hard to soft. This allows the tool to be tested in accordance with VDI/VDE 2647. Machine capability (Cm, Cmk) can be tested quickly and easily under real shopfloor conditions without the need to run tests on the product on the line that would interfere with production.

- Large LCD touchscreen, intuitive and easy to use.
- Efficient hydraulic pump fills the pressure accumulator in just 15 seconds reducing battery drain.
- Innovative braking system with three patents for tool joint simulation. The patents are:
  - Innovative cylinder/actuator
  - Thin steel disk for very low inertia
  - Brakes are in carbon and work in oil for very smooth action

Connector panel manages all operator connections such as external in-line torque transducers, printers, Ethernet, USB and serial.

BLM Joint Simulator Bench 3890

The BLM Joint Simulator Bench 3890 is specially designed for heavy duty applications such as testing production torque tools in the tool crib. It has the same characteristics as the BLM 3860 but is also fitted with a cooling system.

ISO test fixture

This optional fixture can be provided with the Joint Simulator Bench to make torque wrench testing easy and accurate. With dial indicating or electronic wrenches, it is easy to maintain the desired torque with this fixture. During click wrench testing, the fixture reduces operator influence and allows the final torque to be approached slowly and smoothly as recommended in the ISO 6789. The fixture can be extended out from the Joint Simulator Bench to match the length of the torque wrench being calibrated.

Model	Hydraulic brakes, range Nm	Hydraulic brakes, range lb ft	ISO rig	Spindle fixture holder	Dimensions length x width x height	Ordering No.
Mobile benches						
JSB 3860-250	1 - 250	0.8 - 150	–	–	1000 x 550 x 920	8059 0962 00
JSB 3860-250 ISO	1 - 250	0.8 - 150	yes	–	1150 x 550 x 920	8059 0962 30
JSB 3860-500 ISO	1 - 500	0.8 - 365	yes	–	1150 x 550 x 920	8059 0962 35
JSB 3860-1000 ISO	1 - 1000	0.8 - 735	yes	–	1400 x 700 x 950	8059 0962 40
JSB 3860-2000 ISO	1 - 2000	0.8 - 1470	yes	–	1400 x 700 x 950	8059 0962 50
Fix benches						
JSB 3890-500 SH	1 - 500	0.8 - 365	–	yes	2100 x 850 x 1000	8059 0963 00
JSB 3890-2000 SH	1 - 2000	0.8 - 1470	–	yes	2300 x 900 x 1000	8059 0963 50

Grinders

For a new experience, try Atlas Copco Turbo Grinders

GTG21 and GTG40 Turbo Grinders give you twice the power, with half the weight and they are impossible to stall with the right installation! Brazor is the new mobile electric grinder system offering high productivity and low cost of ownership. These are just some of the grinders in Atlas Copco´s wide range covering virtually all applications. With all our grinders, you can rely on maximum material removal with minimum effort and, of course, higher productivity.

Contents **Page**

Selection guide 176
Grinding at the right speed 178
Safety guidelines 179
Electric grinder – Brazor 180
Turbo grinders and sanders 182
Die grinders 186
Straight grinders 188
Vertical grinders 192
Angle grinders 196
Angle sanders 198
Orbital and random orbital sanders 200
Dust extraction 202
Routers 205
Nibblers 205
Circular cutters 206

GRINDERS
Selection guide

DIE GRINDING AND DEBURRING

WITH

1. Carbide burrs
2. Mounted points

ROUGH GRINDING AND CUTTING OFF

WITH

3. Depressed centre wheels
4. Cut off wheels
5. Cup wheels
6. Flap wheels
7. Straight wheels
8. Cone wheels

SANDING AND POLISHING

WITH

9. Fibre discs
10. Wire brushes
11. Coated abrasives
12. Polishing bonnets
13. Radial flap wheels
14. Scotch-brite

GRINDERS
Selection guide

DIE GRINDERS			Page
❶ ❷	LSF07 LSF18 LSV18 LSF28 LSV28 LSF38		186

ROUGH GRINDERS			Page
❸	ESV G71		180-181
❹	GTG21 GTG40 GTR40		182-185
❺	LSS53 LSS64 LSS84		192
❻	LSV18 LSV28 LSV38 LSV48		196
❼	LSR28 LSR38 CW LSR48 LSR64		188
❽			

SANDERS AND POLISHERS			Page
❾ ❿	LSS53 LSS64		194
⓫ ⓬	LSV18 LSV28 LSV38		198
	LSO30 LSO31 LSO32		200
⓭ ⓮	LST20 LST21 LST22 LST30 LST31 LST32		200
	LSF28		186

GRINDERS
Grinding at the right speed

Die grinding

Small precision deburring – die grinding is performed with either tungsten carbide, high speed steel burrs or mounted points.

The choice of burr depends on the size of your job. A larger volume of removed material will require a bigger size of the burr's head.

Select the tool r/min depending on the diameter of the burr head, the material to be ground and the material in the rotary burr. Use tungsten carbide burrs for hard and tough materials. High speed steel burs are recommended for unhardened and medium hard materials. Example, see table below:

Burr head Ø		Hardened steel Though materials	Unhardened steel Softer materials Cast iron	Soft material Wood, brass Plastics, Al.
Up to 6 mm	– TC	38000	38000	38000
	– HSS	–	20000	20000
Up to 12 mm	– TC	30000	30000	30000
	– HSS	–	–	20000

TC – Tungsten carbide tipped rotary burr.

HSS – High speed steel burrs.

For mounted points, follow the recommendations that relate to the particular mounted point.

Rough grinding

Pure material removal, regardless of whether it is removed from a cramped or an open space, is determined by the power generated at the grinding process. The applied feed force and the rotation of the wheel generates a cutting force which multiplied with the peripheral speed of the wheel represents the power removing material, (Power = Peripheral speed x Cutting force).

A powerful grinder will provide enough power with almost maintained rotational speed, when applying feed-force. Higher feed-force requires higher effort from the operator which leads to fatigue. A suitable combination of operative rotational speed, a suitable feed-force applied by the operator and the necessary power of the grinder will give you the best combination for the material removal required.

As rough grinding is performed with bonded abrasives, a limitation of rotational speed is necessary in order to prevent wheel fractures due to centrifugal force.

The peripheral speed is limited to 80 m/s for fibre reinforced depressed centre, straight and cutting off wheels. Resin bonded cup and straight wheels are limited to a peripheral speed of 50 m/s.

Sanding and polishing

Unlike die and rough grinding, sanding and polishing applies to requirements of a surface. A fine surface will require a fine grit paper, fine Scotch-Brite, Bear Tex or a soft polishing bonnet. Rougher surface grinding will require a higher material removal rate and thus a coarser grit paper.

Similar to rough grinding, a rough surface, ground with coarse grit will benefit from a high rotational speed. The limitations are, however, the maximum allowed speed of the backing pad and the fibre disc.

Normal sanding speeds for fibre discs of diameter 125 mm, 180 mm and 230 mm are 4000 to 6000 r/min.

Polishing with different pastes and compounds require low speed in combination with high torque. Suitable speeds are 1800 to 2200 r/min.

Sanding with wet coated abrasives is best performed at low speeds, partly because water is thrown out into the periphery and partly because of the fine grit.

Scotch-Brite, Bear Tex and flap wheels perform best at 50% of their maximum allowed rotational speeds.

The speed governor

The amount of material removed in the grinding process depends on the power of the tool and the operative rotational speed. The diagram below shows the correlation between torque, power and rotational speed of a non governed pneumatic grinder.

In order to remove material, the operator has to apply a feed-force on the work-piece. Consequently the rotational speed decreases and having passed approximately 50% of the free speed, the operative power outtake starts to decrease. Theoretically, the most material would be removed at approximately 50% of the free speed on a non governed grinder, (diagram 1).

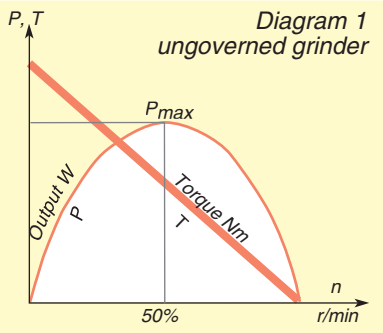

The Atlas Copco grinders are built small and smooth, partly due to their speed governor. The air is governed to the air flow necessary to maintain the rotational speed regardless of load, (to the extent of the power of the grinder).

The correlation between power, torque and rotational speed of a governed grinder is shown in diagram 2.

A theoretical optimum of material removal is reached at approximately 80% of the free speed. The grinder generates max power, removing more material with applied feed force. The rotational speed decreases negligibly.

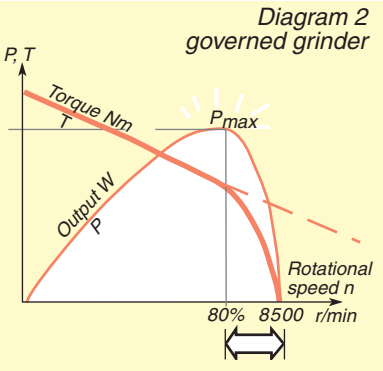

Air is used economically, as the flow through the motor is adjusted after applied load. Air consumption at free speed is minimized. The governor opens and lets in more air during load thus keeping the optimal r/min.

GRINDERS
Safety guidelines

Built-in safety
The Atlas Copco grinders feature a high degree of built-in safety. Overspeed shut-off, safety throttles and wheel guards are good examples of product safety features carried by our grinders.

Performance checked
Every grinder leaving our factory is checked on maximum free speed and general functions.

This is your responsibility
There are, however, measures the operator has to take in order to avoid any risk of misuse or accident. The safety manual, supplied with every grinder contains a number of safety rules for the operator. The 8 steps below are a basic summary of the safety manual. Remember to read the safety manual as well.

HOW TO MAKE IT SAFER

1 Check the free speed
The measured speed at a pressure of 6.3 bars should not exceed the rated speed of the grinder. A tolerance of +10% is acceptable if stated in the documentation of the tool. The wheel must be removed before the grinder is checked. The checks should be carried out regularly, especially after longer standstill. Make sure that the speed marking on the tool is readable.

2 Check the wheelguard
Always use the recommended wheelguard and check that it is not damaged. Never use a grinder without the wheelguard when the grinding wheel requires one.

3 Match the maximum speed of the wheel to the right grinder
Make sure that the stated maximum speed of the grinder never exceeds the maximum speed of the grinding wheel.

4 Check the grinding wheel
Make sure that the grinding wheel is not cracked or damaged in any way. The grinding wheel should have the correct hole dimensions and should be fitted properly on the spindle to avoid unbalanced vibrations.

5 Check that flange and wheel
combinations correspond to national regulations. Check that the flanges are undamaged and that they are clean.

6 Wear
- personal protection goggles
- ear protection
- gloves (helmet in heavier applications)

7 Test run your grinder in a protected area after having assembled the wheel
Keep the space around the grinding operation free from other people.

8 Maintenance
Make sure to follow prescribed service instructions and intervals. Do not disassemble security parts, e.g. speed governor or overspeed shut-off. These parts have to be completely replaced when damaged.

Diameter – Peripheral speed – r/min
The table below will help you to translate the peripheral speed of the grinding wheel to the right rotational speed of the grinder when using a specific diameter of grinding wheel.

Grinding wheel diameter	Peripheral speed in metres per second													
mm	10	15	20	25	28	30	33	35	40	45	48	50	60	80
25	7640	11460	15280	19100	21390	22920	25210	26740	30560	34380	36670	38200	45840	61120
40	4770	7160	9550	11930	13370	14320	15750	16710	19100	21480	22920	23870	28650	38200
50	3820	5730	7640	9550	10690	11460	12600	13370	15280	17190	18330	19100	22920	30560
63	3303	4540	6060	7560	8480	9090	10000	10610	12120	13640	14550	15150	18190	24250
80	2380	3580	4770	5960	6680	7160	7870	8350	9550	10740	11460	11930	14320	19100
100	1910	2860	3820	4770	5340	5730	6300	6680	7640	8590	9160	9550	11460	15280
115	1160	2490	3320	4150	4650	4980	5480	5810	6640	7470	7970	8300	9960	13400
125	1520	2290	3050	3820	4270	4580	5040	5340	6110	6870	7330	7640	9160	12280
150	1270	1910	2540	3180	3560	3820	4200	4450	5090	5730	6110	6360	7640	10180
180	1060	1590	2120	2650	2970	3180	3500	3710	4240	4770	5090	5300	6360	8480
200	950	1430	1910	2380	2670	2860	3150	3340	3820	4290	4580	4770	5730	7640
230	830	1240	1660	2070	2320	2490	2740	2900	3320	3730	3980	4150	4980	6640
250	760	1140	1520	1910	2130	2290	2520	2670	3050	3430	3660	3820	4580	6110
300	630	950	1270	1590	1780	1910	2100	2220	2540	2860	3050	3180	3820	5090

ELECTRIC GRINDER
Brazor Mark II

The Brazor Mark II range

With the Brazor Mark II range we take the successful Brazor concept one step further. Thanks to the unparalleled low weight and high power the tool is an excellent choice for grinding, cutting off and sanding. With the Brazor Mark II range there is no need for complicated installations, simply plug in to the one-phase 230 V net.

All models are equipped with the highly efficient G71 motor and the system will generate superior power with <10% energy losses. This, in combination with the features stated below, makes Brazor Mark II a safe and ergonomic choice for efficient grinding, cutting and sanding:

- Power feedback for most efficient material removal.
- Minimal abrasive costs due to small angle head, speed control and low vibrations.
- Reduced service costs and minimum downtime thanks to overload protection, temperature control and service indicator.
- Full mobility and no installation required.
- Built-in Ground Fault Interrupter (GFI) in PU for electricity safety.

- Superior ergonomics with low vibrations (<2.5 m/s²).
- Service indicator notifies you of preventive maintenance for longer operational life.

Model	Max free speed r/min	For wheel dia mm	Max out put kW peak	Max out put kW cont.	Weight without support handle kg	Weight without support handle lb	Length mm	Width mm	Height over spindle mm	Sound level at free speed dB(A)	Outgoing spindle	Ordering No.
For grinding and cutting												
ESV G71 F120-13	12000	125	>3	2.3	2.8	6.2	350	65	55	81	M14	8433 5001 00
ESV G71 F085-18	8500	180	>3	2.3	2.9	6.4	350	65	55	81	Internal	8433 5000 00
ESV G71 F060-23	6000	230	>3	2.3	3.5	7.7	375	85	60	81	Internal	8433 5002 00
For sanding												
ESV G71 S060	6000	180	>3	2.3	3.2	7.0	375	85	83	81	5/8	8433 5003 00

Power unit

Tool cable

Power unit

Model	Length mm	Width mm	Height mm	Weight kg	Power uptake	Ordering No.
PU81[a]	350	200	200	10	1 phase 230 V	8433 5100 00

[a] Power net cable included.

Tool cables

Length	Ordering No.
2 m	3608 0250 02
5 m	3608 0250 05
10 m	3608 0250 10
20 m	3608 0250 20

ELECTRIC GRINDER
Brazor Mark II

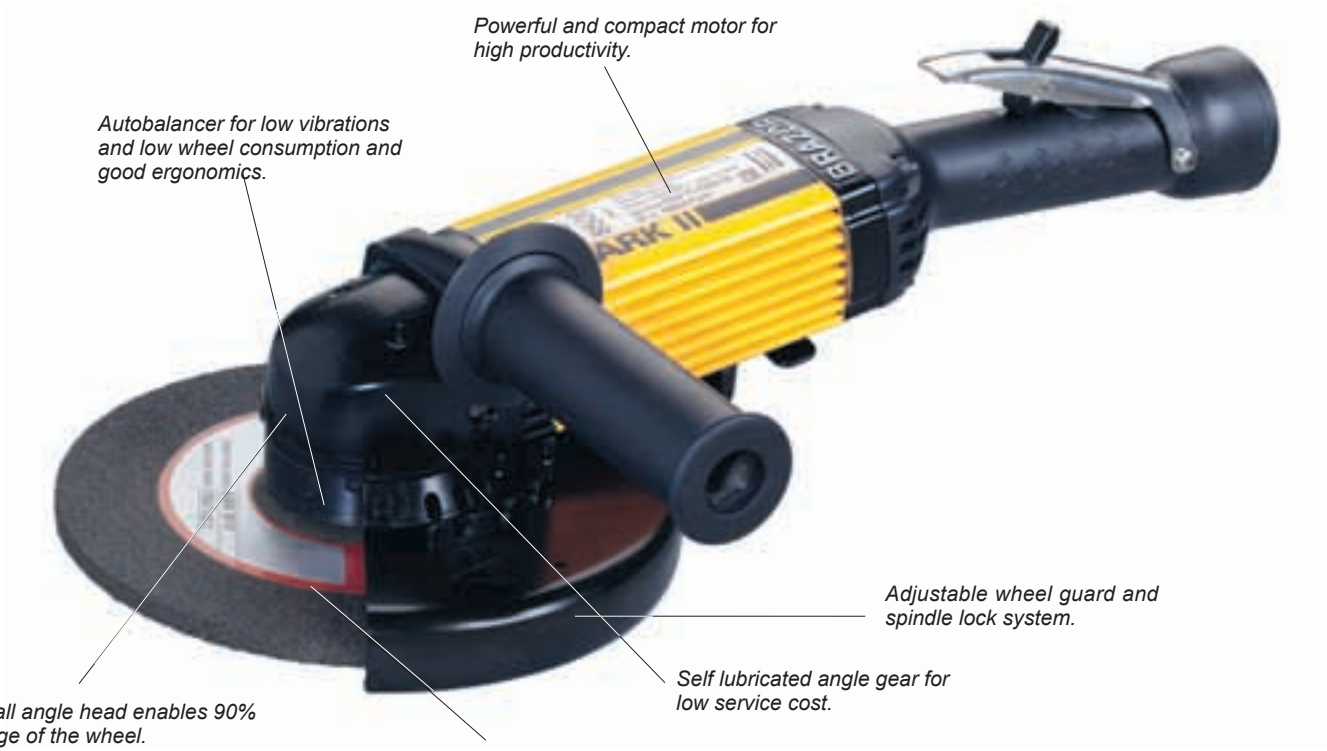

ACCESSORIES INCLUDED

All models

Support handle
Adjustable wheel guard (9" requires key included)
Attachment flanges for grinding and cutting wheels
Key for wheel change
Backing pad with ribbed surface for cooler process (for ESV G71 S060)

OPTIONAL ACCESSORIES

Leather cable cover

Length	Ordering No.
2 m	3608 0440 02
5 m	3608 0440 05
10 m	3608 0440 10
20 m	3608 0440 20

Leather cable cover

Handle bracket

Model	Ordering No.
Multi position handle bracket	3608 0110 01

Handle bracket

Sander adaption kit for sanding with ESV G71 F085-18
Backing pad with ribbed surface for cooler process.

Support pad dia mm	Ordering No. 5/8"	Ordering No. M14
120	4175 0883 92	4175 0883 93
162	4175 0883 90	4175 0883 91

TURBO GRINDERS AND SANDERS

Twice the power. Half the weight. The Turbo grinder gives you twice the power of today's 5", 7" and 9" angle grinders. It is about half the size and weight of high frequency tools with comparable power.

- **High material removal** – The Turbo is powerful and keeps on working at high rotational speed. It gives a higher rate of cutting-off or material removal, with low wheel consumption.
- **Power for efficiency** – The Turbo is driven by an turbine motor, providing power-to-weight ratios never before achieved in grinders. This means you can choose a lighter, more compact tool for ease of use and good accessibility without sacrificing any of the power.
- **Long service life** – The turbine means there are no vanes to slide against the cylinder. The gear runs in oil in a housing with patented seals. The result is consistent performance and interruption free operation.
- **Minimized vibrations** – on the Turbo, vibration has been cut to below 2.5 m/s^2. This has been achieved by an entirely new vibration-damping technique, Auto Balancing, in which a set of bearing balls is used to counterbalance the imbalance in the wheel.
- **Lubrication-free** – The unique turbine drive in the Turbo means that the motor doesn't need oil in the air for lubrication. This provides several benefits from the points of views of working environment, quality and productivity.
- **Dust extraction** – Efficient accessory and standard model for extraction of air-borne dust in sanding applications with fibre discs.

GTG21 is the latest of the Turbo grinders. It is the best choice for rough grinding and sanding applications.

The turbine motor is more efficient than a conventional grinder motor. Therefore it takes less time to do the same job. Also the total air consumption will be a lot less for a specific job.

MORE EFFECTIVE

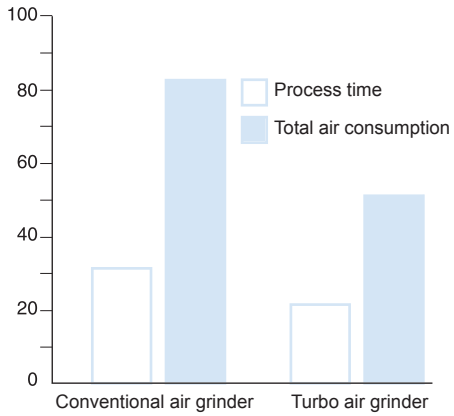

Model	Max free speed r/min	For wheel dia mm	Max output kW	Max output hp	Weight kg	Weight lb	Height over spindle mm	Height over spindle in	Air consumption at max output l/s	Air consumption at max output cfm	Air consumption at free speed l/s	Air consumption at free speed cfm	Rec. hose size mm	Rec. hose size in	Air inlet thread BSP	Sound level at free speed dB(A)	Ordering No.
For grinding and cutting																	
GTG21 F120-13	12000	125	2.1	2.8	1.8	3.9	68	2.7	30	64	10	21	13	1/2	3/8	76	8423 2963 00*
GTG21 F085-18	8500	180	2.1	2.8	2.0	4.2	72	2.8	30	64	10	21	13	1/2	3/8	76	8423 2963 02*
For sanding																	
GTG21 S085[a]	8500	180	2.1	2.8	1.6	3.5	80	3.1	30	64	10	21	13	1/2	3/8	76	8423 2963 05*
GTG21 S085 M14	8500	180	2.1	2.8	1.6	3.5	80	3.1	30	64	10	21	13	1/2	3/8	76	8423 2963 07
GTG 21 D120	12000	180	2.1	2,8	1.6	3.5	92	3.6	30	64	10	21	13	1/2	3/8	76	8423 0800 00*
GTG 21 D085	8500	180	2.1	2,8	1.6	3.5	92	3.6	30	64	10	21	13	1/2	3/8	76	8423 0800 01*

[a] UNC 5/8"-11 spindle.

Flow requirement 250 m^3/h.

-D prepared for accessories for spot suction kit.

* Available directly from stock.

TURBO GRINDERS AND SANDERS

Compact, powerful and efficient

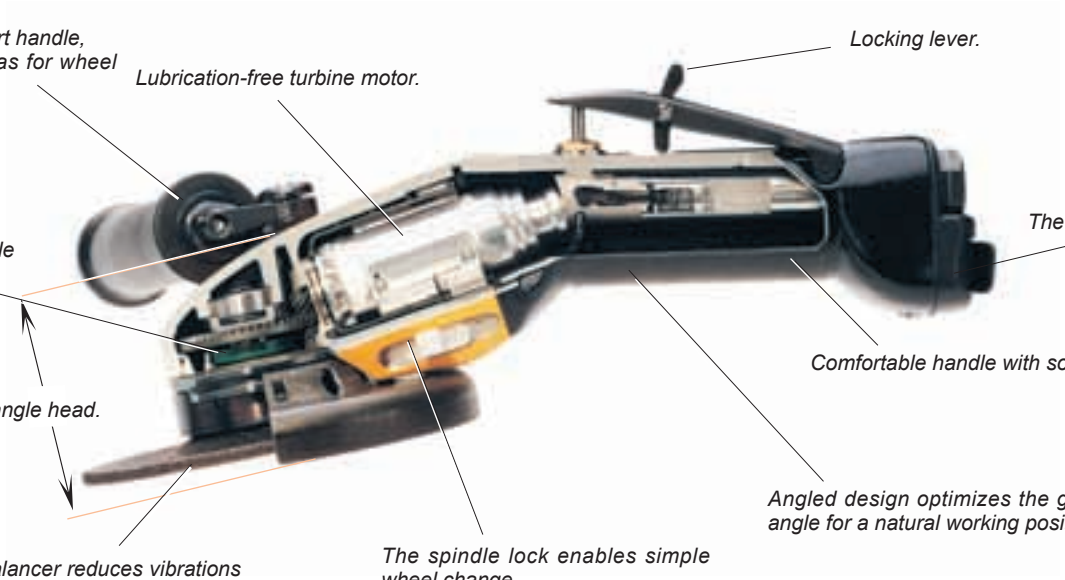

ACCESSORIES INCLUDED

All models

Adjustable support handle

Whip hose 0.7 m long, 13 mm dia complete with nipple and ErgoNIP 10

Gear box oil, one tube

❶ GTG21 F120/F085

Adjustable wheel guard

Attachment flanges for 1-10 mm thick grinding wheels

Hex key for wheel change

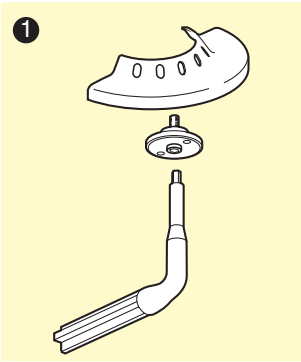

OPTIONAL ACCESSORIES

Air hose set for maximum performance	Ordering No.
RUBAIR 13, L=5 m, incl ErgoNIP 10, ErgoQIC 10	8202 1180 22
Air preparation unit, incl MIDI F/R, ball valve ErgoQIC 10	8202 0845 48
TURBO 16, L=10 m, incl ErgoNIP 10, ErgoQIC 10	8202 1180 46

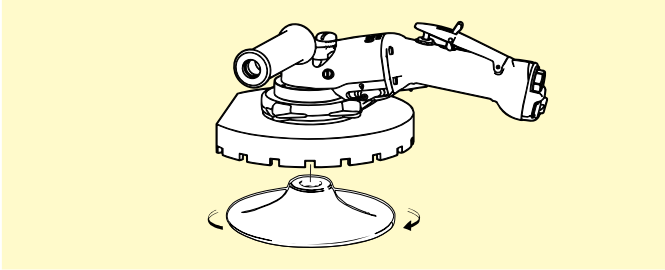

Spot suction kit (ex. sanding fiber disc)

Spot suction kit for GTG21 D120 and GTG21 D085

Model	Ordering No. Dia 125 mm	Ordering No. Dia 180 mm
Grinding depressed centre wheel		
GTG21 D120	3780 4090 23	
GTG21 D085		3780 4090 21
Sanding fiber disc		
GTG21 D120	3780 4090 24	
GTG21 D085	3780 4090 24	3780 4090 26
Cutting GRP with diamond disc		
GTG21 D120	3780 4090 25	
GTG21 D085		3780 4090 22
Diamond disc	3780 5074 61	3780 5074 62

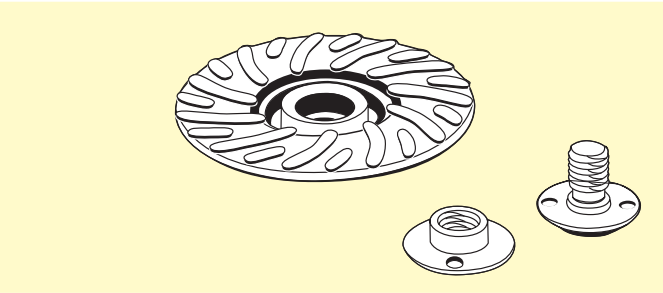

Spindle adapter kit

Spindle adapter kit for sanding

Sanding kit for	Support pad dia mm	Ordering No. 5/8"	Ordering No. M14
GTG21 F120-13	120	4175 0883 92	4175 0883 93
GTG21 F085-18	162	4175 0883 90	4175 0883 91
Adapter[a]		4175 0883 04	4175 0883 03
Nut[a]		4175 0893 00	4175 0893 02

[a] Included in the kit.

SERVICE KIT
4081 0220 90

TURBO GRINDERS

The GTG/GTR40 are the most powerful grinders in the Turbo grinder range, with incredible power for their size and weight. The range includes angle and straight type grinders for virtually every common rough grinding application.

- **GTG40 F** – for rough grinding and cutting off with depressed centre wheels.
- **GTG40 S** – for surface finishing with coated abrasives and wire brushes.
- **GTG40 C** – for rough grinding with cup wheels.
- **GTR40** – for rough grinding and applications such as internal and external cleaning of castings with straight grinding wheels.
- **Dust extraction** – Efficient accessory and standard model for extraction of air-borne dust in sanding applications with fibre discs.

The turbine motor is more efficient than a conventional grinder motor. Therefore it takes less time to do the same job. Also the total air consumption will be a lot less for a specific job.

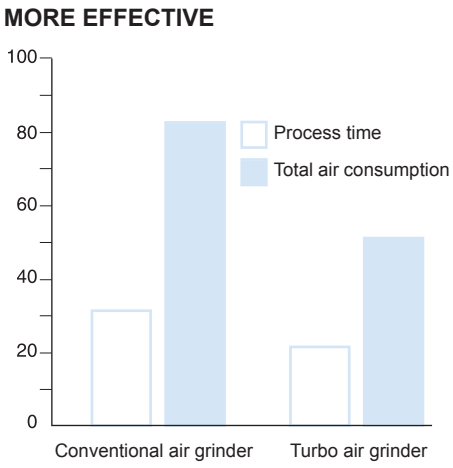

Model	Max free speed r/min	For wheel dia mm	Max output kW	Max output hp	Weight kg	Weight lb	Height over spindle mm	Height over spindle in	Air consumption at max output l/s	Air consumption at max output cfm	Air consumption at free speed l/s	Air consumption at free speed cfm	Rec. hose size mm	Rec. hose size in	Air inlet thread BSP	Sound level at free speed dB(A)	Ordering No.
For grinding and cutting																	
GTG40 F085-18	8500	180	4.5	6.1	3.8	8.4	128	5.0	60	126	20	42	16	5/8	1/2	85	8423 2900 10*
GTG40 F066-23	6600	230	4.5	6.1	4.0	8.8	128	5.0	60	126	20	42	16	5/8	1/2	85	8423 2910 10*
For wire brush and sanding																	
GTG40 S060	6000	140[a]	4.5	6.1	3.6	7.9	132	5.2	60	126	20	42	16	5/8	1/2	85	8423 2930 00*
For cup wheel																	
GTG40 S060-C15[b]	6000	150	4.5	6.1	4.3	10.5	126	5.0	60	126	20	42	16	5/8	1/2	85	8423 2930 10*

[a] For wire brush, Ø 230 mm for fibre disc. [b] Spindle thread: UNC 5/8". Length 23.5 mm.

Model	Max free speed r/min	For wheel dia DxTxH[a] mm	Spindle thread	Max output kW	Max output hp	Weight kg	Weight lb	Length mm	Air consumption at max output l/s	Air consumption at max output cfm	Air consumption at free speed l/s	Air consumption at free speed cfm	Rec. hose size mm	Rec. hose size in	Air inlet thread BSP	Sound level at free speed dB(A)	Ordering No.
GTR40 S085-15	8500	150x25x25	UNC 5/8x11	4.5	6.1	5.6	12.3	563	60	126	20	42	16	5/8	1/2	85	8423 2950 00*
GTR40 S072-13	7200	125x25x25	UNC 5/8x11	4.5	6.1	5.6	12.3	563	60	126	20	42	16	5/8	1/2	85	8423 2951 00
GTR40 S060-15	6000	150x25x25	UNC 5/8x11	4.5	6.1	5.8	12.8	563	60	126	20	42	16	5/8	1/2	85	8423 2952 00*
GTR40 S060-20	6000	200x25x25	UNC 5/8x11	4.5	6.1	5.8	12.8	563	60	126	20	42	16	5/8	1/2	85	8423 2954 00

[a] For straight wheels.

* Available directly from stock.

TURBO GRINDERS

Twice the power. Half the weight

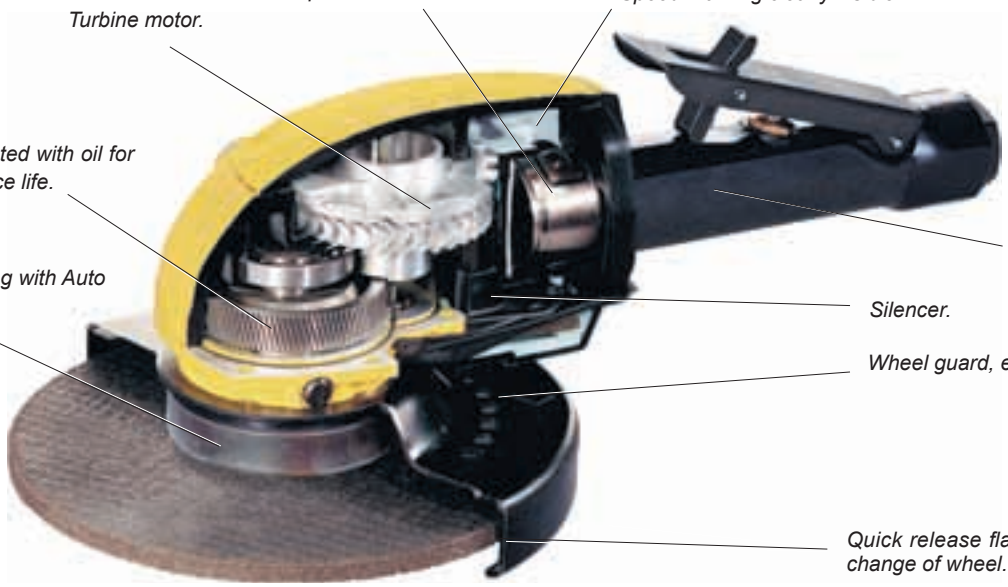

ACCESSORIES INCLUDED – GTG40

Adjustable wheel guard
Support handle
Attachments flanges for 1.5-7 mm thick cut-off wheels and 2.5-8 mm thick depressed centre wheels
Whip hose 0.7 m long, 16 mm dia complete with nipple and ErgoNIP 10
Gear box oil, one tube
Hex key for wheel change

❶ OPTIONAL ACCESSORIES – GTG40

	Ordering No.
Wire brush Ø 140 mm	4170 0685 00
Wire brush attachment set	4170 0550 82
Heavy duty backing pad for sanding Ø 180 mm (7")	4170 1192 90
Ø 230 mm (9")	4170 1193 90
Hand shield	4175 0165 90
Adaptor for positioning support handle 120/135° between handles	4175 0164 90*
Dust extraction kit[a] for 180 mm fiber disc GTG40 S060	3780 4090 10
Hose kit including 1.8 m vacuum hose, Ø 38 mm and air hose Ø 13 mm	3780 2724 41
Friction plate complete	4175 0186 90
Attachment for cup wheel with plane hole	4175 0178 90
Modification kit for handle inclined 10°	4170 1157 93

[a] Incl flow chamber, suction cap and support pad.
* Included as standard in GTG40 S060-C15.

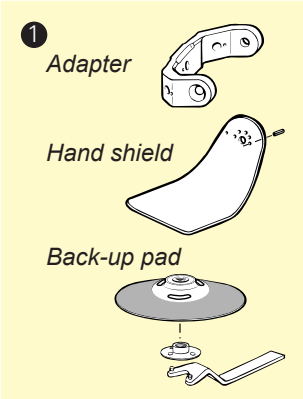

SERVICE KITS

GTG40	4081 0153 90
GTR40	4081 0153 91

ACCESSORIES INCLUDED – GTR40

Wheel guard
Attachments flanges for grinding wheels 20-25 mm thick and with hole Ø 25 mm
Whip hose 0.7 m long, 16 mm dia complete with nipple and ErgoNIP 10
Gear box oil, one tube
Key and spanner for wheel change

❷ OPTIONAL ACCESSORIES – GTR40

		Thickness x Hole dia mm		Ordering No.
2	Rear flange	TxH20-25x 16	2a	4150 0619 00
		x 20	2b	4150 1650 00
		x 32	2c	4150 0620 00
3	Spacer for cone wheel		3	4150 0787 00

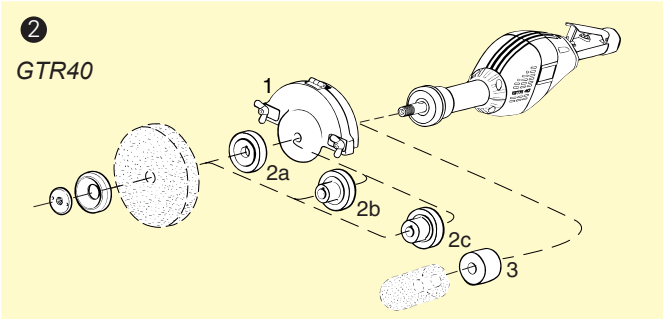

OPTIONAL ACCESSORIES GTG40 and GTR40
Air hose sets for maximum performance

Air hose set	Length	Air pressure	Ordering No.
Fixed installation 5 m, Ø 16 mm			
TURBO 16/5 M/CLAW	5 m	<6 bar	8202 1181 95
Flexible installation 5 m, Ø 16 mm[b]			
TURBO 16/5 M/EQ 10	5 m	>6 bar	8202 1181 80
Flexible installation 20 m, Ø 19 mm[b]			
TURBO 20/20 M/EQ 10	20 m	>6 bar	8202 1181 75
Air preparation unit, including MAXI F/R 25 with ball valve and claw coupling			8202 0845 74

[b] Whip hose 0.5 m included as standard in GTG/GTR40.

DIE GRINDERS

The Atlas Copco governed die grinders offer the very best of productivity, reliability and ergonomics.

- **Best performance, low weight** – The speed governor keeps the rotational speed close to the maximum free speed when feed-force is applied. The use of a speed governor enables a smaller and smoother design while maintaining access to power.
- **Built-in ergonomics for the best working environment** – The unique suspension of motor and spindle of the LSF series prevent unpleasant vibrations from being transferred to the operator's hand. Well tuned motors and air outlet keep sound levels very low.
- **Minimized burr consumption** – A suspension of the spindle prevents the burr from chattering. Apart from a smoother die grinding operation, the burr consumption is minimized, in many applications by 20%.
- **Wide range** – You can choose the suitable model for your application – from heavy duty versions to small, angle die grinders. Short and extended models (E).
- **LSF28 ST030 is lubrication-free** – for clean environment.

- **LSF-R**, these models have a rigid shaft suspension. Recommended for mounted points.
- **LSF38** – 1350 Watt powerful motor for the toughest applications. LSF38 S180 is lubrication-free.
- **LSF38/R** – has rigid spindle with two front bearings.
- **LSF18/LSV18** – Lubrication free.

Model	Max free speed r/min	Rec. max dia of: Tungsten carbide burrs mm	Rec. max dia of: Mounted point mm	Max output kW	Max output hp	Weight kg	Weight lb	Length mm	Air consumption at max output l/s	Air consumption at max output cfm	Air consumption at free speed l/s	Air consumption at free speed cfm	Rec. hose size mm	Rec. hose size in	Air inlet thread BSP	Sound level at free speed dB(A)	Ordering No. with collet 6 mm	Ordering No. with collet 1/4"
Die grinders – Straight models																		
LSF18 S430-1[a]	43000	9	16	0.51	0.68	0.5	1.1	193	11.4	24	15.0	31.5	10	3/8	1/4	77	8423 1224 04	
LSF18 S430E-1[a]	43000	9	16	0.51	0.68	0.7	1.5	291	11.4	24	15.0	31.5	10	3/8	1/4	77	8423 1224 09	
LSF18 S300	30000	12	20	0.50	0.67	0.5	1.1	193	11.3	23.7	6.6	13.8	10	3/8	1/4	71	8423 1224 03	8423 1224 06
LSF18 S300/R	30000	12	20	0.50	0.67	0.5	1.1	193	11.3	23.7	6.6	13.8	10	3/8	1/4	71	8423 1224 11	
LSF18 S300E-1	30000	12	20	0.50	0.67	0.7	1.5	291	11.3	23.7	6.6	13.8	10	3/8	1/4	71	8423 1224 08	
LSF18 S300E-1/R	30000	12	20	0.50	0.67	0.7	1.5	291	11.3	23.7	6.6	13.8	10	3/8	1/4	71	8423 1224 10	
LSF18 S200	20000	12	20	0.40	0.54	0.5	1.1	193	9.6	20.1	3.5	7.4	10	3/8	1/4	67	8423 1224 02	8423 1224 05
LSF18 S200E-1	20000	12	20	0.40	0.54	0.7	1.5	291	9.6	20.1	3.5	7.4	10	3/8	1/4	67	8423 1224 07	
LSF28 S250[a]	25000	12	32	0.86	1.15	0.75	1.65	210	18.5	39.2	11.0	23.3	10	3/8	3/8	75	8423 1235 11	
LSF28 S250E[a]	25000	12	32	0.86	1.15	1.25	2.75	335	18.5	39.2	11.0	23.3	10	3/8	3/8	75	8423 1235 60	
LSF28 S250E-R[a]	25000	12	32	0.86	1.15	1.25	2.75	335	18.5	39.2	11.0	23.3	10	3/8	3/8	75	8423 1235 49	
LSF28 S250-R[a]	25000	12	32	0.86	1.15	0.75	1.65	210	18.5	39.2	11.0	23.3	10	3/8	3/8	75	8423 1235 48	
LSF28 S180[a]	18000	16	40	0.82	1.10	0.75	1.65	210	17.4	36.9	11.0	23.3	10	3/8	3/8	69	8423 1235 04	
LSF28 S180E[a]	18000	16	40	0.82	1.10	1.25	2.75	335	17.4	36.9	7.0	14.8	10	3/8	3/8	69	8423 1235 05	
LSF28 S180E-1R[a]	18000	16	40	0.82	1.10	1.25	2.75	335	17.4	36.9	7.0	14.8	10	3/8	3/8	69	8423 1235 42	
LSF28 S180-1R[a]	18000	16	40	0.82	1.10	0.75	1.65	210	17.4	36.9	7.0	14.8	10	3/8	3/8	69	8423 1235 41	
LSF28 S150[a]	15000	16	40	0.70	0.94	0.75	1.65	210	15.0	31.8	5.5	11.7	10	3/8	3/8	66	8423 1235 64	
LSF28 S150E[a]	15000	16	40	0.70	0.94	1.25	2.75	335	15.0	31.8	4.3	9.1	10	3/8	3/8	66	8423 1235 61	
LSF28 S120[a]	12000	16	40	0.66	0.89	0.75	1.65	210	13.8	29.3	4.0	8.5	10	3/8	3/8	65	8423 1235 67	
LSF38 S250E-01[a]	25000	16	40	1.35	1.8	1.5	3.3	352	28	58	25	53	13	1/2	3/8	83	8423 1231 17*	
LSF38 S180E-01	18000	16	40	1.35	1.8	1.5	3.3	352	28	58	15	31	13	1/2	3/8	81	8423 1231 16*	
LSF38 S180E-01/R	18000	16	40	1.35	1.8	1.5	3.3	356	28	58	15	31	13	1/2	3/8	81	8423 1231 15*	
LSF38 S150E-01/R	15000	16	40	1.25	1.7	1.5	3.3	356	24	50	13	27	13	1/2	3/8	80	8423 1231 14*	
Angle grinders																		
LSV18 S200-1	20000	12	20	0.46	0.61	0.6	1.3	185	11	23	7	14.7	10	3/8	1/4	76	8423 0111 11	
LSV18 S120-1	12000	12	20	0.46	0.61	0.6	1.3	185	11	23	7	14.7	10	3/8	1/4	76	8423 0111 13	
LSV18 S080-1	8000	12	20	0.37	0.5	0.6	1.3	185	11	23	6.5	13.6	10	3/8	1/4	76	8423 0111 16	
LSV28 S150	15000	16	40	0.68	0.91	1.15	2.53	250	17.0	36.0	8.3	17.6	10	3/8	3/8	78	8423 0125 54	
Die grinders for polishing																		
LSF28 ST030	3000	–	–	0.67	0.90	1.16	2.55	275	18.0	38.2	8.6	18.2	10	3/8	3/8	73	8423 1235 63	
LSF28 ST030E	3000	–	–	0.67	0.90	1.76	3.87	400	18.0	38.2	8.6	18.2	10	3/8	3/8	73	8423 1235 62	
LSF28 ST070[a]	7000	–	–	0.76	1.02	1.16	2.55	275	18.9	40.1	12.4	26.3	10	3/8	3/8	75	8423 1235 66	
LSF28 ST070E[a]	7000	–	–	0.76	1.02	1.76	3.87	400	18.9	40.1	12.4	26.3	10	3/8	3/8	75	8423 1235 65	

[a] Not lubrication-free.

E = Extended version, flexible spindle

R = Rigid model

* Available directly from stock.

DIE GRINDERS

- **High speed model** – LSF07 is a high speed model for precise grinding and polishing at die making and e.g. renovation of air craft engines.

Model	Max free speed r/min	Rec. max dia of Tungsten carbide burrs mm	Rec. max dia of Mounted point mm	Max output kW	Max output hp	Weight kg	Weight lb	Length mm	Air consumption at max output l/s	Air consumption at max output cfm	Air consumption at free speed l/s	Air consumption at free speed cfm	Rec. hose size[c] mm	Air inlet thread BSP	Sound level at free speed[a] dB(A)	Ordering No. with collet[b]
LSF07 S850	88000	4	6	0.10	0.13	0.4	0.9	170	2.2	4.9	2.3	4.6	4.5	–	79	8423 1222 03*

[a] With exhaust hose and in accordance with Pneurop-Cagi test code for all tools.
[b] Ø 3 mm collet standard.
[c] Air hose and ErgoNIP included.

* Available directly from stock.

ACCESSORIES INCLUDED

Air hose and ErgoNIP 08 included Ø 3 mm collet and collet wrench. Exhaust with silencer (LSF07).

OPTIONAL ACCESSORIES

Ø 1/8" collet 4150 1822 00

ACCESSORIES

LSF18

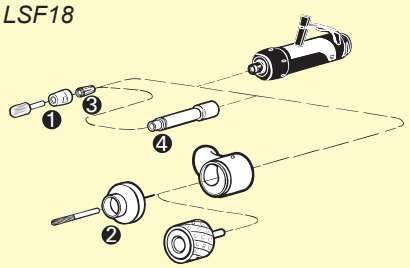

LSF18 E

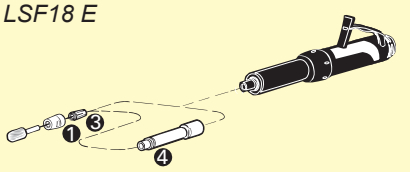

LSF28

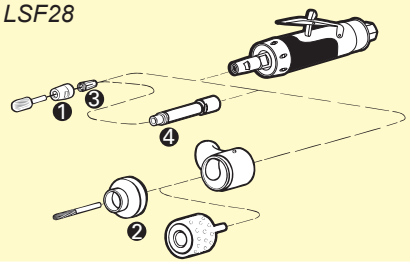

LSF28 E

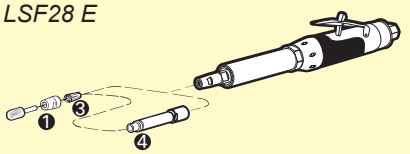

❶ ACCESSORIES INCLUDED

Spanner
Collet 6 mm
Air hose, air hose nipple and clamp (18/28-series)
Exhaust hose

❷ OPTIONAL
For machining reinforced plastics

For die grinders	LSF18	Dia mm	LSF28	Dia mm
Diamond burr	3780 5013 70	6	3780 5014 20	8
Diamond drum	3780 5033 00	27	3780 5035 00	50
Spot suction kit for burr	3780 3015 20		3780 4007 41	
Spot suction kit for drum	3780 4011 60	6 (shaft)	3780 4011 71	8 (shaft)

❸ OPTIONAL collets

Dia	Ordering No.
LSF18/28	
3 mm	4150 0081 00
6 mm	4150 0075 00
8 mm	4150 0074 00
1/4"	4150 0076 00
Collet nut	4150 0760 00
LSF38	
6 mm	4150 1453 00
8 mm	4150 0706 00
10 mm	4150 0681 00
1/4"	4150 1754 00
Collet nut	4150 0849 00

❹ Spindle extension for R-models

Spindle extension is optional	Ordering No.
Length 75 mm / 3 inches	4150 0674 00

SERVICE KITS

07 series	4081 0243 90
18 series	4081 0355 90
28 series	4081 0315 90
38 series	4081 0308 90

STRAIGHT GRINDERS

For cone wheels and collet

Internal grinding of holes and cavities in castings, etc require rough abrasives, which must be attached to the tool with a rigid shank or be mounted directly to the spindle.

- **Outstanding power and ergonomics** – The LSR48 provides you with extremely high power for internal grinding. The autobalancer reduces vibrations to a minimum. The tool is also equipped with an overspeed shut-off device.
- **Rigid and powerful** – The LSR range gives you maximum power for rough internal grinding tasks.
- **Built-in ergonomics for operator comfort** – Lighter jobs are successfully handled with LSR28/38. These light, handy tools offer low sound and vibration levels and will spare your operators.
- **Lubrication-free** – The LSR38 and LSR48 models are lubrication-free.

Model	Max free speed r/min	Max output kW	Max output hp	Weight kg	Weight lb	Length mm	Air consumption at max output l/s	Air consumption at max output cfm	Air consumption at free speed l/s	Air consumption at free speed cfm	Rec. hose size mm	Rec. hose size in	Air inlet thread BSP	Sound level at free speed dB(A)[a]	Ordering No.
Straight grinders															
LSR28 S120-CW	12000	0.66	0.88	1.2	2.6	305	15.8	33.5	4.3	8.6	13	3/8	3/8	65	8423 1325 05
LSR28 S150-CW	15000	0.70	0.94	1.2	2.6	308	18.0	38.2	5.8	12.3	13	3/8	3/8	72	8423 1325 06
LSR38 S150-CW	15000	1.25	1.7	1.5	3.3	320	24	50	13	27	13	3/8	3/8	80	8423 1232 31*
LSR38 S180-CW	18000	1.35	1.8	1.5	3.3	320	28	58	15	31	13	3/8	3/8	81	8423 1232 30*
LSR43 S150-30	15000	1.0	1.3	2.0	4.4	438	23	49	10	21	13	1/2	1/2	87	8423 1432 32*
LSR43 S150-30C	15000	1.0	1.3	2.1	4.6	503	23	49	10	21	13	1/2	1/2	87	8423 1432 33*
LSR43 S120-30	12000	0.9	1.2	2.0	4.4	438	20	42	7	15	13	1/2	1/2	84	8423 1432 24*
LSR43 S090-30	9000	0.8	1.1	2.0	4.4	438	18	38	5	11	13	1/2	1/2	81	8423 1432 57*
LSR43 S072-30	7200	0.8	1.1	2.0	4.4	438	17	36	4	8	13	1/2	1/2	80	8423 1432 40*
LSR48 S150-CW	15000	2.0	2.7	2.3	5.0	447	35	74	19	40	16	5/8	1/2	84	8423 1430 08*
LSR48 S120-CW	12000	1.8	2.4	2.3	5.0	447	30	64	13	27	16	5/8	1/2	82	8423 1430 05*
LSR48 S090-CW	9000	1.5	2.0	2.3	5.0	447	28	59	11	23	16	5/8	1/2	82	8423 1430 03*

[a] LSR28/38 measured with exhaust hose (incl. accessories).

* Available directly from stock.

LSR28/38 CW indicates use for cone wheel or collet, thread M12x1 to be combined with adaptor for wheel thread. LSR48 has UNC 1/2 spindle for direct attachment of CW. For 5/8 and collet use adapter, see page for accessories.

STRAIGHT GRINDERS

Accessories for cone wheels and collet

ACCESSORIES INCLUDED

LSR28/38 CW versions

Air hose nipple and clamp
Exhaust hose
Wrenches
Whip hose (28)

LSR48 CW versions

Whip hose
Open end spanner

OPTIONAL ACCESSORIES

❶❷ LSR28/38 CW

			Ordering No.
1a	Nut		4150 0849 00
1b	Collet dia	6 mm	4150 1453 00
		8	4150 0706 00
		9	4150 0765 00
		10	4150 0681 00
		1/4"	4150 1754 00
1c	Holder		4150 0680 00
2a	Nut		4150 0221 00
2b	Collet	6 mm	4150 0222 00
		8 mm	4150 0325 00
		1/4"	4150 0223 00
2c	Extended holder		4150 0441 00
	Short holder		4150 0211 00

❶❺ LSR48 CW

			Ordering No.
1a	Nut		4150 0849 00
1b	Collet dia	6 mm	4150 1453 00
		8	4150 0706 00
		9	4150 0765 00
		10	4150 0681 00
		1/4"	4150 1754 00
5	Holder		4150 0680 01

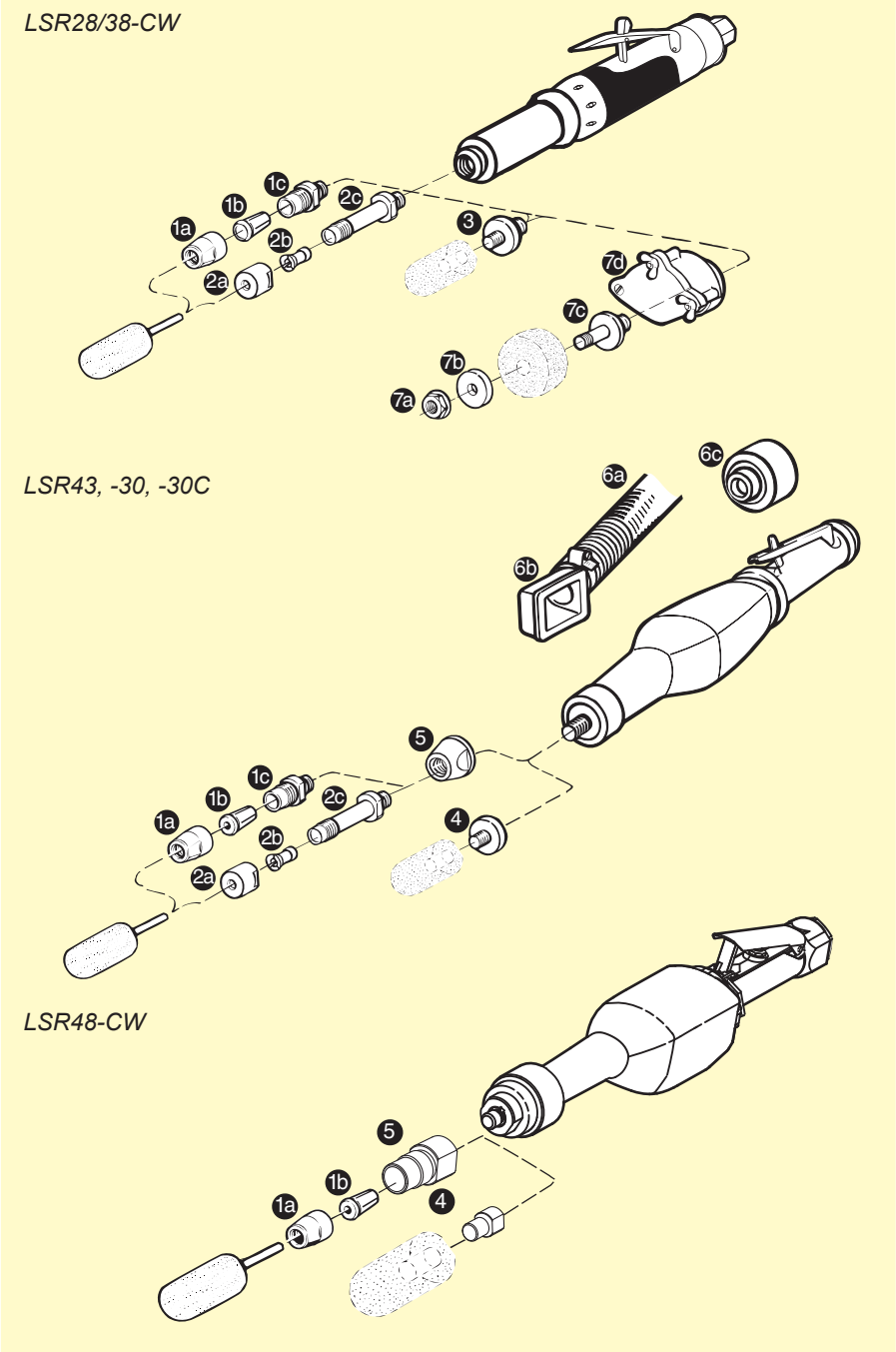

❸❹ Adapter for cone wheel

Thread	3 LSR28/38 CW Ordering No.	4 LSR48 CW Ordering No.	4 LSR43 -30 Ordering No.
UNC/W 3/8"	4150 0318 00	–	4150 0943 00
UNF 3/8"	4150 0318 01	–	4150 0943 01
UNC 1/2"	4150 1357 00	–	4150 0944 00
UNC/W 5/8"	4150 0767 00	4150 0945 01	4150 0945 00

❺ Adapter for LSR43 S072-30, -S090-30, -S120-30, -S150-30

	Ordering No.
Adapter	4150 0861 00

❻ Silencer/lubricator for LSR43

6a Silencer	6b Adapter for silencer	6c Lubricator
4150 1005 80	4150 0938 80	4150 1405 80

❼ Assembly parts for alternative straight wheel dimensions for LSR 28/38 CW

Wheel dimension	Ordering No.			
DxTxH	7a Nut	7b Flange	7c Holder	7d Wheel guard
50x19x10	0266 2111 00	4106 5938 00	4150 0212 00	4150 1299 81
50x13x10	0266 2111 00	4106 5938 00	4150 1145 00	4150 1299 81

SERVICE KITS

28 series	4081 0315 90
38 series	4081 0311 90
43 series	4081 0020 90
48 series	4081 2023 90

STRAIGHT GRINDERS

For straight wheels

High rate of material removal in open spaces is achieved with a straight grinder equipped with a straight sided wheel.

- **Rigid and powerful for best productivity** – The LSR48 and 64 series are sturdy and powerful enough for the roughest conditions. The length of these grinders can preferably be used as a lever for higher feed force. The LSR48 provide minimal vibration levels thanks to the autobalancer and is equipped with an over speed shut of devise.
- **Built-in ergonomics for working comfort** – Smaller jobs for straight sided wheels suit the LSR28 series well. Low sound and vibration levels, thermally insulated throttle handle and piped-away exhaust air are product features to spare the operator.
- **GTR straight turbo grinder**, see page 184.

Model	Max free speed r/min	For wheel dia. DxTxH[a] mm	Spindle thread	Max output kW	Max output hp	Weight kg	Weight lb	Length mm	Air consumption at max output l/s	Air consumption at max output cfm	Air consumption at free speed l/s	Air consumption at free speed cfm	Rec. hose size mm	Rec. hose size in	Air inlet thread BSP	Sound level at free speed dB(A)[b]	Ordering No.
Straight grinders																	
LSR28 S180-05	18000	50x13x10	UNC 3/8x42	0.82	1.09	1.86	4.09	340	19.8	42.0	7.3	15.5	13	3/8	1/2	76	8423 1325 04
LSR28 S150-10	15000	100x13x20	UNC 1/2x42	0.70	0.94	2.16	4.75	340	18.0	38.2	5.8	12.3	13	3/8	1/2	67	8423 1325 02
LSR28 S110-08	11000	80x13x10	UNC 3/8x42	0.62	0.83	1.9	4.18	340	15.8	33.5	3.6	7.6	13	3/8	1/2	67	8423 1325 03
LSR43 S150-10	15000	100x25x25	UNC 1/2x49	1.0	1.4	2.8	6.2	438	23	49	10	21	13	1/2	1/2	87	8423 1430 34
LSR43 S120-08	12000	80x25x13	UNC 1/2x49	0.9	1.2	2.5	5.5	438	20	42	7	15	13	1/2	1/2	84	8423 1430 26*
LSR43 S090-10	9000	100x25x13	UNC 1/2x49	0.8	1.1	2.4	5.3	438	18	38	5	11	13	1/2	1/2	81	8423 1430 18*
LSR48 S150-10	15000	100x25x16-25	UNC 5/8x42	2.0	2.7	3.5	7.7	482	35	74	19	40	16	5/8	1/2	84	8423 1430 07*
LSR48 S120-08[d]	12000	80x25x13-25	UNC 1/2x37	1.8	2.4	3.0	6.6	495	30	64	13	28	16	5/8	1/2	80	8423 1430 04*
LSR48 S120-08R[c]	12000	80x25x13-25	UNC 1/2x37	1.8	2.4	3.1	6.8	478	30	64	13	28	16	5/8	1/2	80	8423 1431 04*
LSR48 S120-13	12000	125x25x16-25	UNC 5/8x42	1.8	2.4	3.6	7.9	482	30	64	13	28	16	5/8	1/2	80	8423 1430 06*
LSR48 S120-10	12000	100x32x16-25	UNC 5/8x49	1.8	2.4	3.5	7.7	489	30	64	13	28	16	5/8	1/2	80	8423 1430 09*
LSR48 S090-10[d]	9000	100x25x13-25	UNC 1/2x37	1.5	2.0	3.2	7.0	495	28	59	11	23	16	5/8	1/2	84	8423 1430 02*
LSR48 S090-10R[c]	9000	100x25x13-25	UNC 1/2x37	1.5	2.0	3.3	7.2	478	28	59	11	23	16	5/8	1/2	84	8423 1431 02*
LSR64 S100-15	10000	150x25x25	UNC 5/8x55	2.9	4.0	5.8	2.8	535	53	112	26	55	16	1/2	5/8	88	8423 1640 55
LSR64 S072-13	7200	125x25x16	UNC 5/8x55	2.5	3.4	5.4	11.9	535	45	95	14	30	16	1/2	5/8	84	8423 1640 30
LSR64 S060-15	6000	150x25x16	UNC 5/8x55	2.3	3.1	5.4	11.9	535	41	87	11	23	16	1/2	5/8	82	8423 1640 22*

[a] DxTxH = Diameter x Thickness x Hole.

[b] LSR28 measured with exhaust hose (incl accessories). For LSR64 the sound level can be reduced 8-12 dB(A) by using a silencer (optional accessories).

[c] LSR48 models marked with R requires reinforced grinding wheels according to safety norms.

[d] LSR48 S120-08 and LSR48 S090-10 are equipped with closed wheel guard.

Model	Max free speed r/min	Spindle thread in x mm	Max output kW	Max output hp	Weight kg	Weight lb	Length mm	Air consumption at max output l/s	Air consumption at max output cfm	Air consumption at free speed l/s	Air consumption at free speed cfm	Rec. hose size mm	Rec. hose size in	Air inlet thread BSP	Sound level at free speed dB(A)[a]	Ordering No.
Straight grinders for wire brushes																
LSR28 ST070E-CW	7000	UNC 1/2 x 20	0.76	1.0	1.9	4.3	445	18.9	40.1	12.4	26.3	10	3/8	3/8	75	8423 1235 71
LSR43 S072	7200	UNC 1/2 x 49	0.8	1.1	2.0	4.4	438	17	36	4	8	13	1/2	1/2	80	8423 1430 00
LSR64 S041	4100	UNC 5/8 x 55	1.6	2.5	5.4	11.9	535	29	61	7	15	16	5/8	1/2	81	8423 1640 14*

[a] The sound level can be reduced 8-12 dB(A) by using a silencer (optional accessories).

* Available directly from stock.

STRAIGHT GRINDERS
Accessories for straight wheels

LSR28 straight wheel

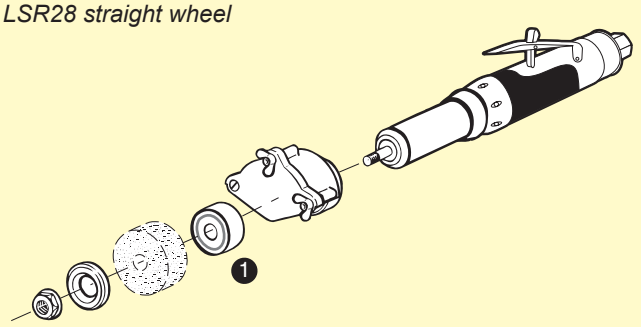

LSR64 straight wheel

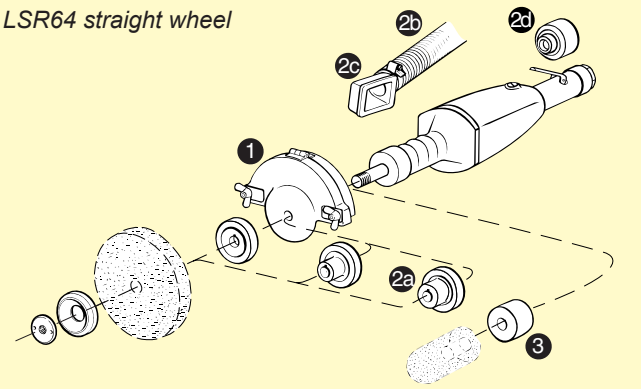

Radial wire brush

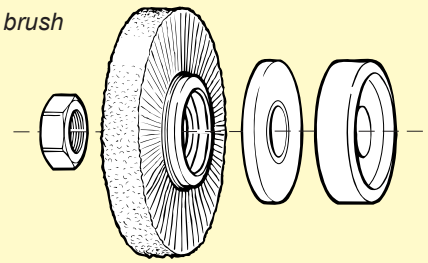

ACCESSORIES INCLUDED

❶ LSR28

Wheel guard, size according to type
Nut, flanges
Air hose, air hose nipple and clamp
Exhaust hose
Wrenches

LSR48

Wiphose
Hook wrench
Pin key
Flanges, 1/2 spindle, H dia. 13/16/20/25 mm
5/8 spindle, H dia. 16/20/25 mm

LSR64

Wheel guard, size according to type
Nut, flanges
Air hose nipple and clamp
Wrenches

OPTIONAL ACCESSORIES

❷ LSR64

Model		Ordering No.
2a	Flange TxH 25x32	4150 0620 00
2b	Silencer	4150 1006 80
2c	Exhaust guard	4150 0968 80
2d	Lubricator	4150 1405 80

❸ Spacers for threaded cone wheels and plugs 5/8" thread

Model	LSR64 S100-15
3 Spacer	4150 0787 00

For wire brushes – Radial type for straight grinders

Model	Diameter mm	LSR28 ST070E	LSR64
Brush	100	4000 8771 00	–
Brush	150	–	4000 8764 01
Attachment set	–	4150 0318 85	4150 0619 80

SERVICE KITS

28 series 4081 0317 90
64 series 4081 0138 90
48 series 4081 2023 90
53 series 4081 0132 90
43 series 4081 0020 90

VERTICAL GRINDERS

For depressed centre, cut-off and cup wheels

Rough material removal and cutting-off requires lots of power. 180 mm and 230 mm depressed centre and cut-off wheels need the power of the Atlas Copco LSS series.

- **A grinder for every application** – The wide power and model range, from 1.4 to 3.8 kW provides a selection for any amount of material removal with depressed centre, cut-off or cup wheel.
- **Rigid and powerful for best productivity** – The LSS53/64/84 range is powerful and sturdy enough for the roughest grinding jobs. All LSS grinders have a nodular cast iron cylinder for longest service life.

Model	Max free speed r/min	For wheel dia mm	Spindle thread	Max output kW	Max output hp	Weight kg	Weight lb	Height over spindle mm	Air consumption at max output l/s	Air consumption at max output cfm	Air consumption at free speed l/s	Air consumption at free speed cfm	Rec. hose size mm	Rec. hose size in	Air inlet thread BSP	Sound level at free speed dB(A)	Ordering No.
Vertical grinders																	
LSS53 S120-13	12000	125	5/8	1.6	2.2	2.7	6.0	180	31	66	16	34	13	1/2	1/2	80	8423 2530 88*
LSS53 S085-18	8500	180	5/8	1.4	1.9	2.9	6.4	180	27	57	10	21	13	1/2	1/2	79	8423 2530 72*
LSS64 S085-18	8500	180	5/8	2.6	3.5	4.7	10.4	201	50	106	13	28	16	5/8	1/2	86	8423 2641 38*
LSS53 S072-C13[a]	7200	125	5/8	1.3	1.8	3.1	6.8	180	26	55	8	17	13	1/2	1/2	77	8423 2534 12
LSS64 S060-C15[a]	6000	150	5/8	2.2	3.0	5.0	11.0	201	40	85	9	19	16	5/8	1/2	82	8423 2641 04
LSS64 S060-23	6000	230	5/8	2.2	3.0	5.1	12.6	201	40	85	9	19	16	5/8	1/2	82	8423 2641 46*
LSS84 S060-23	6000	230	5/8	3.8	5.1	6.0	13.2	217	65	138	17	36	19	3/4	1/2	88	8423 2840 26*

[a] For cup wheel.

* Available directly from stock.

VERTICAL GRINDERS

Accessories for depressed centre, cut-off and cup wheels

LSS53

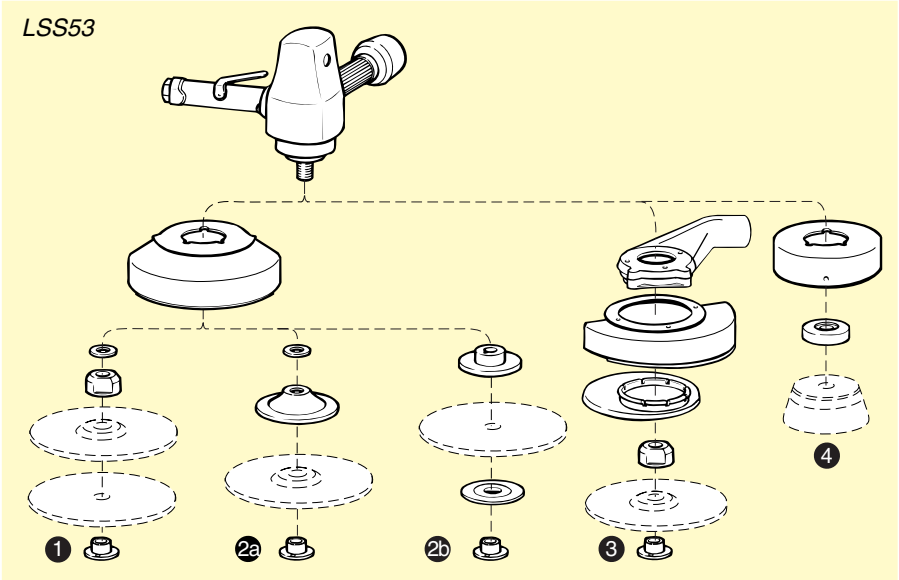

ACCESSORIES INCLUDED

1 Attachment according to EN 68

Wheel guard	
Flange	4170 0758 01
Nut	4170 0220 01
Wrenches	

OPTIONAL ACCESSORIES

2 Traditional flange assembly for all models

Rear flange
Outer flange
Nut
Pin wrench

Depressed centre wheel (2a) Ordering No.	Cut off wheel (2b) Ordering No.
4170 0219 87	4170 1133 87

3 Spot suction kit, see page 195

Flow chamber
Wheel guard 180 mm
Cap
Washer
EN 68 flange
Nut

Model	Wheel dia mm	Ordering No.
LSS53 S085	180	3780 4011 10

LSS64/84

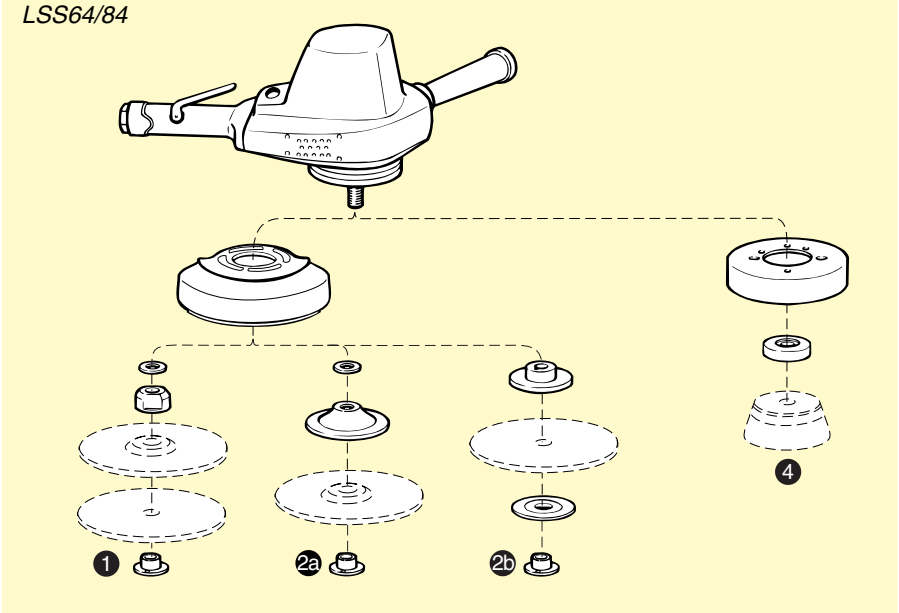

4 For cup wheel

(incl in C13 and C15 models)

Wheel guard Ø 125 mm	4170 0664 80
Wheel guard Ø 150 mm	4170 0652 80
Flange	4170 1128 01

SERVICE KITS

LSS53	4081 0132 90
LSS64	4081 0133 90
LSS84	4081 0136 90

VERTICAL GRINDERS
For sanding

Surface grinding jobs with coarse grit fibre disc on stiff pads or with wire brush requires high power and torque. A vertical grinder is a good choice of tool where accessibility is of minor importance.

- **High productivity** – The speed governor keeps rotational speed constant when applying feed-force, which speeds up the material removal rate and increases productivity.
- **Ergonomic** – Sound and vibration levels are low for the best comfort of the operator.
- **Wide range** – The range covers any requirement on power for surface grinding abrasives.
- **Turbo sander** – Ideal for rough sanding, see page 182.

Model	Max free speed r/min	Rec. pad size dia mm	Spindle thread	Max output kW	Max output hp	Weight kg	Weight lb	Height mm	Air consumption at max output l/s	Air consumption at max output cfm	Air consumption at free speed l/s	Air consumption at free speed cfm	Rec. hose size mm	Rec. hose size in	Air inlet thread BSP	Sound level at free speed dB(A)	Ordering No.
Rotary sanders. Vertical type																	
LSS53 S060	6000	180	5/8	1.2	1.6	2.3	5.1	180	24	51	7	15	13	1/2	1/2	76	8423 2530 23*
LSS53 S060-M14	6000	180	M14	1.2	1.6	2.3	5.1	180	24	51	7	15	13	1/2	1/2	76	8423 2530 27*
LSS64 S060	6000	180	5/8	2.2	3.0	4.1	9.0	201	40	85	9	19	16	5/8	1/2	82	8423 2640 12*

* Available directly from stock.

OPTIONAL ACCESSORIES

❶ Backing set standard type
washers – backing pad – nut – wrench

All models dia mm	Ordering No. Soft	Ordering No. Stiff
125	4170 0768 80	–
180	4170 0756 80	4170 0757 80

❷ Backing set combination type
washer – hub – pad 125, 180 and 230 mm – nut – wrench

All models dia mm	Ordering No.
125-180	4170 0258 80
125-230	4170 0259 80

❸ Backing set heavy duty type
washer – rubber hub – back-up pad – nut

All models dia mm	Ordering No. Soft	Ordering No. Medium	Ordering No. Stiff
125	–	4170 0659 82	–
180	4170 0660 81	4170 0660 82	4170 0660 83
230	–	4170 0661 82	4170 0661 83

❹ Spot suction kit for fibre disc, dia 180 mm
flow chamber – cap – washers – backing pad – nut

Model	Dia mm	Ordering No.
LSS53	180	3780 4011 00

❺ Wire brushes – Cup type

For vertical	Brush Ø 115 mm Ordering No.	Brush Ø 140 mm Ordering No.	Brush Ø 145 mm Ordering No.
Attachment set	4170 0459 81	4170 0550 80	4170 0337 80
Brush	4170 0491 00	4170 0685 00	4006 8938 03
Suitable for	LSS53 S060	LSS64 S060 GTG40 S060	LSS64 S060

SERVICE KITS

LSS53	4081 0132 90
LSS64	4081 0133 90

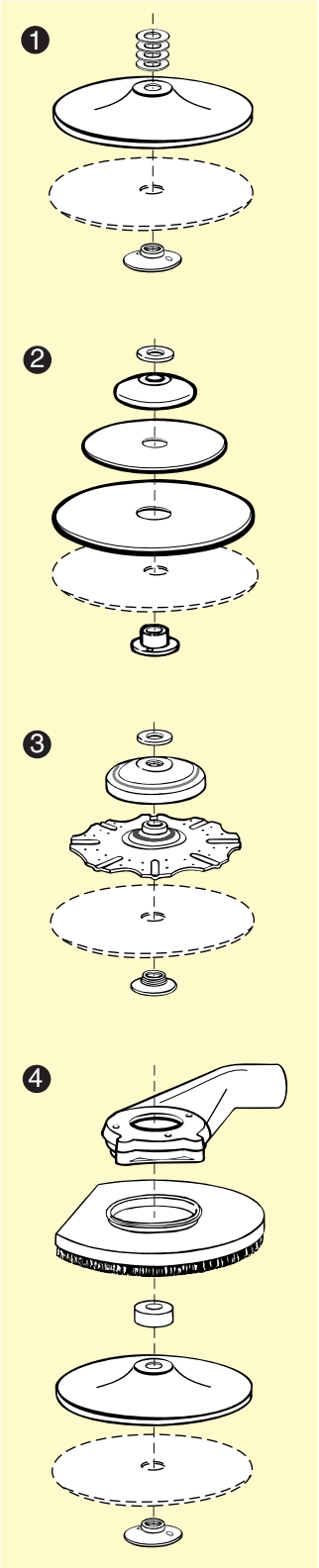

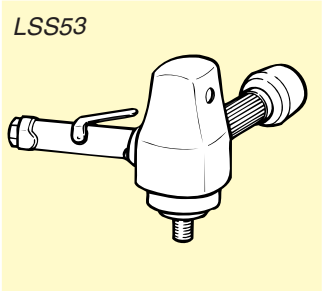

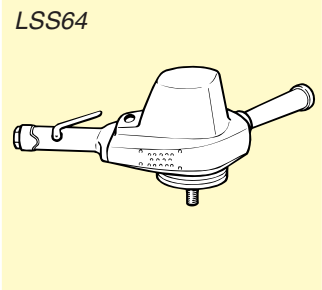

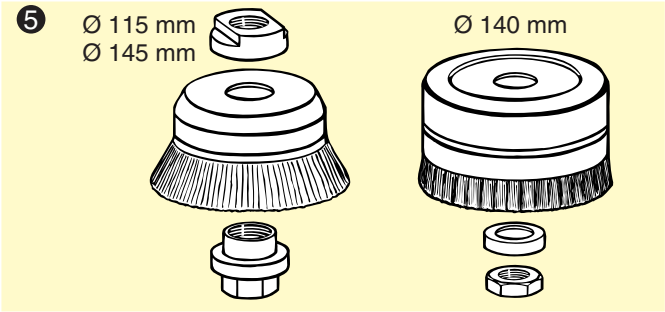

ANGLE GRINDERS

For depressed centre and cut-off wheels

Smooth, precise grinding with demands on accessibility will guide your choice to an angle grinder with depressed centre or cut-off wheel.

The span between LSV18 to LSV38 offers you the right size of tool between 80 to 125 mm diameter wheel respectively and power of 0.39 to 1.3 kW. All the grinders have sealed angle heads which avoids greasy nipples or oil leakage.

- **High productivity, good accessibility** – The speed governor keeps rotational speed close to free speed for a high material removal rate. The low angle head gives access to cramped spaces with increased productivity as the result.
- **Ergonomics** – Thermal isolation of handles, low sound and vibration levels as well as sealed angle heads make these tools the best for operator comfort.
- **LSV38** – A completely new angle grinder with impressive power, 1300 Watt, and a low weight for best productivity in the grinding application. The LSV38 is available in three different versions to suite different needs. The LSV38 ST and -SA -versions have a spindle lock for quick and easy change of grinding wheel. The position of the wheel guard on both models can be changed without tool for best accessibility. The LSV38 SA has an Autobalancer that reduces vibrations from the grinding process.

- **The LSV18** is lubrication free.
- **LSV38 ALU-Cut** – This is a new attachment in our range of accessories for material removal and cutting off operations in aluminium.

Model	Max free speed r/min	For wheel dia DxTxH[a] mm	Spindle thread	Max output kW	Max output hp	Weight kg	Weight lb	Height over spindle mm	Air consumption at max output l/s	Air consumption at max output cfm	Air consumption at free speed l/s	Air consumption at free speed cfm	Rec. hose size mm	Rec. hose size in	Air inlet thread BSP	Sound level at free speed dB(A)[b]	Ordering No.
LSV18 S170-08	17000	80x7x10	UNF 3/8"	0.45	0.6	0.7	1.55	71	11.2	23	6.6	14	10	3/8	1/4	76	8423 0111 10
LSV28 ST13-10E	13000	100x7x9.5	3/8	0.75	1.0	1.5	3.3	68	21.5	45	14.5	30	10	3/8	3/8	88	8423 0125 29*
LSV28 ST12-10	12000	100x7x16	3/8	0.75	1.0	1.7	3.7	80	17.4	36.9	7.5	15.9	10	3/8	3/8	75	8423 0125 14
LSV28 ST12-12	12000	115x7x22	3/8	0.75	1.0	1.7	0.0	80	17.4	36.9	7.5	15.9	10	3/8	3/8	75	8423 0125 16
LSV28 ST12-13	12000	125x7x22	3/8	0.75	1.0	1.7	0.0	80	17.4	36.9	7.5	15.9	10	3/8	3/8	75	8423 0125 17
LSV28 S060-18	6000	180[c]	5/8"-11	0.73	0.98	2.5	5.4	87	16	33.9	7.3	15.5	10	3/8	3/8	73	8423 0135 53
LSV38 S12-125	12000	125x7x22	M14	1.30	1.7	1.6	3.5	83	28	58	15	31	13	3/8	1/2	89	8423 0131 10*
LSV38 ST12-125	12000	125x7x22	M14	1.30	1.7	1.8	4.0	83	28	58	15	31	13	3/8	1/2	83	8423 0131 11*
LSV38 SA12-125	12000	125x7x22	M14	1.30	1.7	2.0	4.4	83	28	58	15	31	13	3/8	1/2	83	8423 0131 13*
LSV48 SA120-13	12000	125x7x22	M14	1.9	2.5	2.5	5.5	78	36	76	17	36	16	5/8	1/2	89	8423 0132 07*
LSV48 SA085-18	8500	180x7x22	M14	1.9	2.5	2.7	5.9	78	36	76	17	36	16	5/8	1/2	89	8423 0132 06*
LSV48 SA066-23	6600	230x7x22	5/8"-11	1.9	2.5	2.9	6.4	82	36	76	17	36	16	5/8	1/2	89	8423 0132 08*

[a] DxTxH = Diameter x Thickness x Hole.
[b] For LSV18/28/38 ST, -SA with exhaust hose.
[c] Specially for flexible depressed centre wheel, see page 197.
SA = Autobalancer.

With wheel guard for disc
–08 = Ø 75 mm
–12 = Ø 115 mm
–13 = Ø 125 mm
–18 = Ø 180 mm
–23 = Ø 230 mm

* Available directly from stock.

ANGLE GRINDERS

Accessories for depressed centre and cut-off wheels

❶ ACCESSORIES INCLUDED

LSV18

Wheel guard 80 mm
Flanges 4150 1158 80
Air Hose nipple, clamp
Wrenches
Exhaust hose set

LSV28

Wheel guard
Flanges 4150 1160 80
Support handle 4150 1521 80
Air hose, air hose nipple, clamp
Wrenches
Exhaust hose set

LSV38

Wheel guard (LSV38 S)
Adjustable wheel guard (LSV38 ST, -SA)
Wheel attachment flanges
Wrenches for flanges
Spindle lock (LSV38 ST, -SA)
Support handle (LSV38 ST, -SA)
Exhaust hose (LSV38 ST)
HD-type exhaust hose (LSV38 SA)
Autobalancer (LSV38 SA)
Whip hose Turbo 13 with ErgoNIP 10 (LSV38 SA)

LSV48

Wheel guard
Flange nut 4150 1160 02
Support handle 4175 0868 82

❷ OPTIONAL ACCESSORIES

LSV28

Spot suction kit for depressed centre wheel 125 mm, see page 203.
Flow chamber
Wheel guard
Cap
Washer
EN 68 flange
Nut

Model	Ordering No.
LSV28 ST12-13	3780 4008 70

❸ Parts for fitting flexible depressed centre wheel especially for LSV28 S060-18. Backing pads and disc are available from abrasive suppliers. Wheel guard must be used (incl in LSV28 S060-18).

Adapter	Nut	Washer
For 5/8" spindle		
–	4170 0759 00	4170 0311 00
For 3/8" spindle		
4150 1159 00	4150 1410 00	–

LSV48

Silencer	Ordering No.
LSV48	4150 2049 80

❹ LSV38 Alu-Cut

Alu-Cut		Ordering No.
Guard kit		4112 1161 90
Carbide tipped cutter, dia 125 mm,	t = 4 mm	4112 1162 00
	t = 2 mm	4112 1164 00

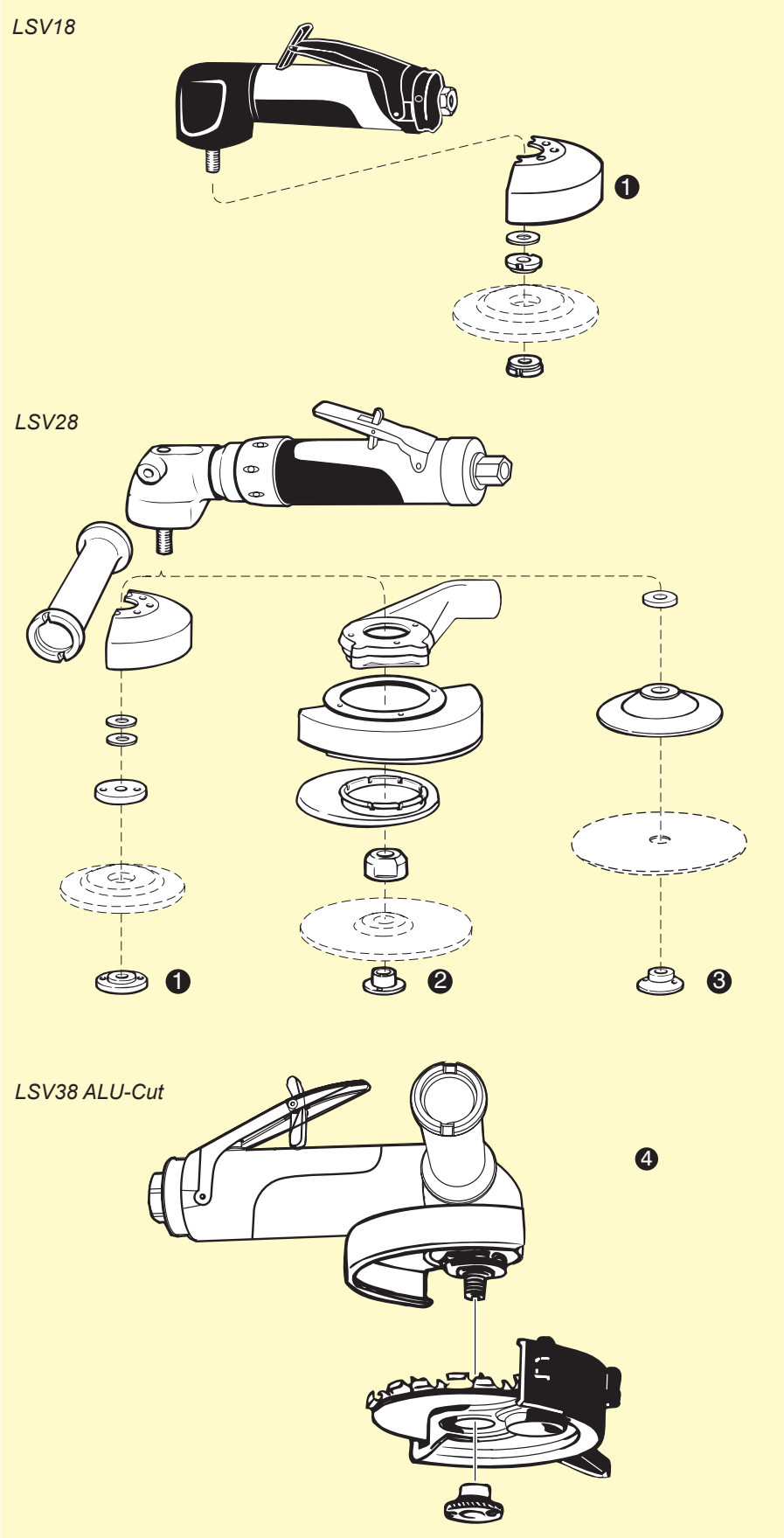

SERVICE KITS

LSV18	4081 0355 90
LSV28	4081 0317 90
LSV38	4081 0309 90
LSV48	4081 0312 90

ANGLE SANDERS

For sanding and polishing

Surface grinding and polishing operations of various grit require a virtually unlimited number of combinations of rotational speeds and fittings for accessories.

- **Wide range** – The Atlas Copco LSV28 series represents a competitive range of angle sanders with rotational speeds, from the finest polishing operation to coarse grit sanding.
- **Special features for special applications** – Different speed versions with water supply are well suited for finishing at car body workshops or in the stone industry. Versions of both central and peripheral water supply can be found in the range.
- **Torque ranges for any kind of sanding/polishing** – Planetary gears in combination with the angle gear enables a bigger reduction of speed which gives the extra torque needed. The angle grinders marked ST are equipped with a planetary gear.
- **Lubrication-free models, LF** – Avoids contamination of workpiece. No oil in the exhaust air.

- **LSV38** – A completely new angle sander with impressive power and a low weight for best productivity in rough sanding applications. The LSV38 sanders have a spindle lock for quick and easy change of abrasives. An exhaust hose is included for piped away exhaust air.
- **LSV38 D** – This version is equipped with spot suction accessories for extraction of the air borne sanding dust.

Model	Max free speed r/min	Rec. pad size max dia mm	Spindle thread	Max output kW	Max output hp	Weight kg	Weight lb	Length mm	Height over spindle mm	Air consumption at max output l/s	Air consumption at max output cfm	Air consumption at free speed l/s	Air consumption at free speed cfm	Rec. hose size mm	Rec. hose size in	Air inlet thread BSP	Sound level at free speed dB(A)[a]	Ordering No.
With collet																		
LSV18 S200-1	20000	50	– [b]	0.46	0.62	0.6	1.32	193	79	11.3	23.9	7.5	15.9	10	3/8	1/4	76	8423 0111 11
LSV18 S120-1	12000	75	– [b]	0.46	0.62	0.6	1.32	185	79	11.3	23.9	7.5	15.9	10	3/8	1/4	76	8423 0111 13
LSV18 S080-1	8000	75	– [b]	0.37	0.50	0.6	1.32	185	79	11.3	23.9	6.5	13.8	10	3/8	1/4	76	8423 0111 16
With threaded spindle																		
LSV18 S200	20000	50	1/4"-20	0.46	0.62	0.6	1.32	193	58	11.3	23.9	7.5	15.9	10	3/8	1/4	76	8423 0111 12
LSV18 S120	12000	75	1/4"-20	0.46	0.62	0.6	1.32	185	58	11.3	23.9	7.5	15.9	10	3/8	1/4	76	8423 0111 14
LSV18 S080	8000	75	1/4"-20	0.37	0.50	0.6	1.32	185	58	11.3	23.9	6.5	13.8	10	3/8	1/4	76	8423 0111 15
Rotary sanders. Dry sanding																		
LSV28 S060	6000	180	5/8"-11	0.73	0.98	1.5	3.2	265	87	16	33.9	7.3	15.5	10	3/8	3/8	73	8423 0125 30
LSV28 S060-M14	6000	180	M14	0.73	0.98	1.5	3.2	265	87	16	33.9	7.3	15.5	10	3/8	3/8	73	8423 0125 64
LSV28 S040	4000	180	5/8"-11	0.62	0.83	1.5	3.2	265	87	15	31.8	4	8.5	10	3/8	3/8	72	8423 0126 22
LSV28 ST034	3400	180	5/8"-11	0.71	0.95	1.7	3.7	305	87	18	38.2	7.7	16.3	10	3/8	3/8	77	8423 0135 80
LSV28 S021	2100	180	5/8"-11	0.68	0.91	1.9	4.1	285	87	16	33.9	5.6	11.9	10	3/8	3/8	71	8423 0125 19
LSV28 S021-M14	2100	180	M14	0.68	0.91	1.9	4.1	285	87	16	33.9	5.6	11.9	10	3/8	3/8	71	8423 0125 72
Wet sanding																		
LSV28 S040-01-M14	4000	180	M14	0.62	0.83	1.5	3.2	265	87	15	31.8	5	10.6	10	3/8	3/8	73	8423 0125 12
LSV28 ST018-01-M14	1800	180	M14	0.74	0.99	1.7	3.7	305	87	19	40.3	13	27.6	10	3/8	3/8	78	8423 0125 96
Lubrication-free. Dry and wet sanding																		
LSV28 ST013-M14 LF	1300	180	M14	0.68	0.91	1.7	3.7	285	87	20	42.4	9	19.1	10	3/8	3/8	74	8423 0125 28
LSV28 ST013 LF	1300	180	5/8"-11	0.68	0.91	1.7	3.7	285	87	20	42.4	9	19.1	10	3/8	3/8	74	8423 0126 26
LSV28 ST008-01 LF	800	200	5/8"-11	0.68	0.91	2.0	4.3	285	87	16	33.9	5.6	11.9	10	3/8	3/8	74	8423 0125 51
LSV38 S085	8500	180	5/8	1.30	1.7	1.5	3.3	217	96	28	58	15	31	13	1/2	3/8	83	8423 0130 69*
LSV38 S085-M14	8500	180	M14	1.30	1.7	1.5	3.3	217	96	28	58	15	31	13	1/2	3/8	83	8423 0130 72*
LSV38 S066	6600	180	5/8	1.20	1.6	1.5	3.3	217	96	24	50	13	27	13	1/2	3/8	83	8423 0130 73*
LSV38 S066-M14	6600	180	M14	1.20	1.6	1.5	3.3	217	96	24	50	13	27	13	1/2	3/8	83	8423 0130 77*
LSV38 S066 D	6600	180	5/8	1.20	1.6	2.3	5.0	217	96	24	50	13	27	13	1/2	3/8	83	8423 0130 75*
LSV38 S085 D	8500	180	5/8	1.30	1.7	2.3	5.0	217	96	28	58	15	31	13	1/2	3/8	83	8423 0130 76*
LSV48 SA085	8500	180	5/8	1.9	2.5	2.3	5.1	310	78	36	76	17	36	16	5/8	1/2	83	8423 0132 02
LSV48 SA085-M14	8500	180	M14	1.9	2.5	2.3	5.1	310	78	36	76	17	36	16	5/8	1/2	83	8423 0132 03
LSV48 SA066	6600	180	5/8	1.9	2.5	2.3	5.1	310	78	36	76	17	36	16	5/8	1/2	83	8423 0132 00
LSV48 SA066-M14	6600	180	M14	1.9	2.5	2.3	5.1	310	78	36	76	17	36	16	5/8	1/2	83	8423 0132 01
LSV48 SA085 D	8500	180	5/8	1.9	2.5	2.8	6.2	310	94	36	76	17	36	16	5/8	1/2	83	8423 0132 05
LSV48 SA066 D	6600	180	5/8	1.9	2.5	2.8	6.2	310	94	36	76	17	36	16	5/8	1/2	83	8423 0132 04

[a] LSV18/28/38 measured with exhaust hose.
[b] Ø 6 mm collet.
-1 = 6 mm Collet
-M = Male 1/4" thread

ACCESSORIES INCLUDED
Air hose nipple
Clamp
Exhaust hose (LSV18/28/38)
Support handle (LSV28/38/48)
Wrenches
Spot suction equipment (D-version)

* Available directly from stock.

ANGLE SANDERS

Accessories for sanding and polishing

OPTIONAL ACCESSORIES

❶ Backing set standard type

washers – backing pad – nut – wrench

For all models dia, mm	Ordering No. Soft	Ordering No. Stiff
125	4170 0768 80	–
180	4170 0756 80	4170 0757 80

❷ Backing pad with ribbed surface for cooler process, fits both UNC5/8"-11 and M14 spindel thread

backing pad – rear washer – front nut

For all models dia mm	Pad Ordering No.	Pin key for front nut[a] Ordering No.
125	4150 1962 80	4080 1169 00
180	4150 1962 81	4080 1169 00

[a] Optional, order separately.

❸ Backing set combination type

washer – hub – pad 125, 180 and 230 mm – nut – wrench

For all models	Dia mm	Ordering No.
	125-180	4170 0258 80
	125-230	4170 0259 80

❹ Backing set heavy duty type

washer – rubber pad – back-up pad – nut

For all models dia mm	Ordering No. Soft	Ordering No. Medium	Ordering No. Stiff
125	–	4170 0659 82	–
180	4170 0660 81	4170 0660 82	4170 0660 83
230	–	4170 0661 82	4170 0661 83

❺ Spot suction kit for fibre disc, sanders with UNC 5/8" spindle (see page 204)

flow chamber – cap – washers – backing pad – nut

Model	Dia mm	Ordering No.
LSV28 S060	125	3780 4007 80
LSV28 S040/S060	180	3780 4007 90
LSV28 S021	180	3780 4031 60

❻ Backing set for polishing, velcro type

For all models dia mm	Max r/min	Lamb's wool bonnet Ordering No.	Backing set Ordering No.
150	2500	4112 6093 15	4112 6092 15

❼ Backing set for abrasive paper and wet sanding

washers – backing pad – foam rubber pad

Dia mm	Max r/min	Medium Ordering No.
180	2500	4170 0428 83

❽ Silencer

Model	Ordering No.
LSV48	4150 2049 80

❾ Spot suction kit for LSV18 S-1

Model	Dia mm	Ordering No.
LSV18 S-1	50 / 75	3780 4042 62

❿ Hand shield for LSV38

Model	For pad Dia mm	Ordering No.
LSV38 S085/S085M14, S066/S066M14	125-180	4150 1936 80

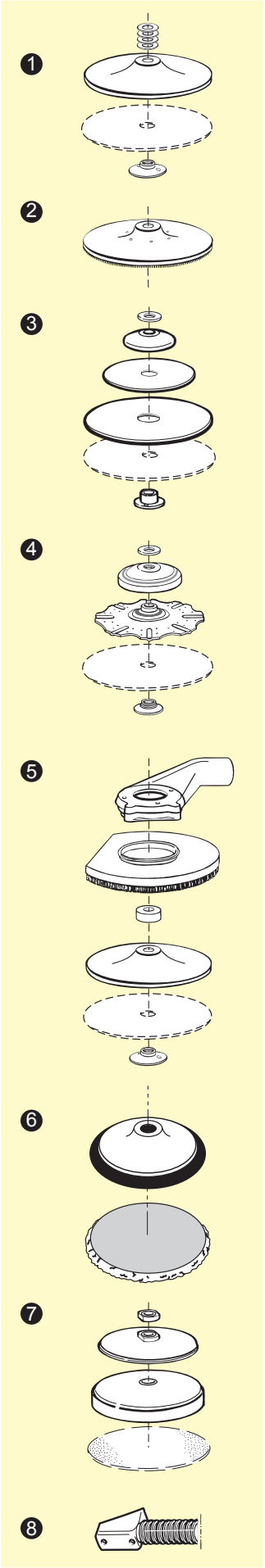

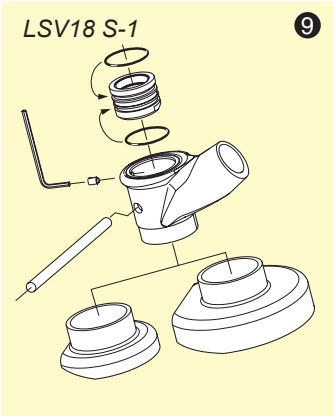

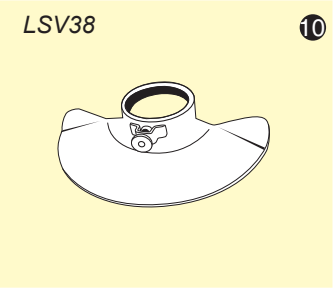

SERVICE KITS

LSV18	4081 0355 90
LSV28	4081 0317 90
LSV38	4081 0309 90
LSV48	4081 0312 90

ORBITAL AND RANDOM ORBITAL SANDERS

The new series of random orbital sanders combine all the important customer and application requirements in a very competitive range of products. Applications like sanding before painting and surface coating, polishing with wax and surface conditioner are all quickly done with the small and easily operated LST20-range of sanders. Vibration level is below 2.5 m/s² on all models.

All models are lubrication free and have silicone free components. They have two grip options in the same handle. In addition, one smaller grip model is included. The full range includes standard models and extraction models. There are also two orbit diameters to choose from in the model range.

- **Lubrication-free** – Avoids contamination of workpiece. No oil in the exhaust air.

Model	Max free speed r/min	Pad size mm	Orbit dia mm	Max output kW	Max output hp	Weight kg	Weight lb	Height mm	Length mm	Air consumption at free speed l/s	Air consumption at free speed cfm	Rec. hose size mm	Air inlet thread BSP	Sound level at free speed dB(A)	Ordering No.
Random orbital – Standard															
LST30 H090-11	9000	110	8	0.3	0.4	1.2	2.6	120	255	7.5	16	8	1/4	81	8423 0361 64*
LST30 H090-15	9000	150	8	0.3	0.4	1.2	2.6	120	275	7.5	16	8	1/4	81	8423 0361 72*
LST30 S090-15	9000	150	8	0.3	0.4	1.1	2.4	120	175	7.5	16	8	1/4	80	8423 0361 98*
Self suction[a]															
LST31 H090-15	9000	150	8	0.3	0.4	1.4	3.0	120	300	7.5	16	8	1/4	84	8423 0363 19*
Central suction[b]															
LST32 H090-15	9000	150	8	0.3	0.4	1.4	3.0	120	300	7.5	16	8	1/4	82	8423 0362 55*
LST32 S090-15	9000	150	8	0.3	0.4	1.3	2.9	120	200	7.5	16	8	1/4	82	8423 0362 71*
Orbital – Standard															
LSO30 S070-3	7000	93x170	5	0.3	0.4	1.6	3.5	125	185	7.5	16	8	1/4	80	8423 0360 16*
LSO30 H070-3	7000	93x170	5	0.3	0.4	1.7	3.7	125	285	7.5	16	8	1/4	81	8423 0360 24*
Self suction[a]															
LSO31 S070-3	7000	93x170	5	0.3	0.4	1.6	3.5	125	210	7.5	16	8	1/4	82	8423 0362 79
LSO31 H070-3	7000	93x170	5	0.3	0.4	1.7	3.7	125	310	7.5	16	8	1/4	81	8423 0363 03*
Central suction[c]															
LSO32 S070-3	7000	93x170	5	0.3	0.4	1.6	3.5	125	210	7.5	16	8	1/4	78	8423 0360 99
LSO32 H070-3	7000	93x170	5	0.3	0.4	1.8	4.0	125	310	7.5	16	8	1/4	79	8423 0361 07
Standard model															
LST20 R350	12000	90	5	0.2	0.27	0.85	1.85	95	127	8	17	8	1/4	76	8423 0361 65*
LST20 R550	12000	125	5	0.2	0.27	0.85	1.85	83	127	8	17	8	1/4	76	8423 0361 69*
LST20 R650	12000	150	5	0.2	0.27	0.85	1.85	83	127	8	17	8	1/4	76	8423 0361 73*
LST20 R325	12000	90	2.4	0.2	0.27	0.85	1.85	95	127	8	17	8	1/4	76	8423 0361 76*
LST20 R525	12000	125	2.4	0.2	0.27	0.85	1.85	83	127	8	17	8	1/4	76	8423 0361 81
LST20 R625	12000	150	2.4	0.2	0.27	0.85	1.85	83	127	8	17	8	1/4	76	8423 0361 84*
Extraction model – self suction															
LST21 R350	12000	90	5	0.2	0.27	0.85	1.85	95	133[d]	8	17	8	1/4	85	8423 0361 66
LST21 R550	12000	125	5	0.2	0.27	0.85	1.85	83	133[d]	8	17	8	1/4	85	8423 0361 70*
LST21 R650	12000	150	5	0.2	0.27	0.85	1.85	83	133[d]	8	17	8	1/4	85	8423 0361 74*
LST21 R325	12000	90	2.4	0.2	0.27	0.85	1.85	95	133[d]	8	17	8	1/4	85	8423 0361 77
LST21 R525	12000	125	2.4	0.2	0.27	0.85	1.85	83	133[d]	8	17	8	1/4	85	8423 0361 82
LST21 R625	12000	150	2.4	0.2	0.27	0.85	1.85	83	133[d]	8	17	8	1/4	85	8423 0361 85*
Extraction model – central suction[c]															
LST22 R350	12000	90	5	0.2	0.27	0.85	1.85	95	133[d]	8	17	8	1/4	78	8423 0361 67
LST22 R550	12000	125	5	0.2	0.27	0.85	1.85	83	133[d]	8	17	8	1/4	78	8423 0361 71*
LST22 R650	12000	150	5	0.2	0.27	0.85	1.85	83	133[d]	8	17	8	1/4	78	8423 0361 75*
LST22 R325	12000	92	2.4	0.2	0.27	0.85	1.85	95	133[d]	8	17	8	1/4	78	8423 0361 78
LST22 R525	12000	125	2.4	0.2	0.27	0.85	1.85	83	133[d]	8	17	8	1/4	78	8423 0361 83
LST22 R625	12000	150	2.4	0.2	0.27	0.85	1.85	83	133[d]	8	17	8	1/4	78	8423 0361 86*

[a] Includes dust collecting bag.
[b] Required air flow 150 m³/h or 88 cfm.
[c] Required air flow 60 m³/h or 35 cfm.
[d] 186 mm (7.3") included suction hose connector.

H = With handle
S = Without handle
All data at 6.3 bar.

* Available directly from stock.

MODELS / ACCESSORIES

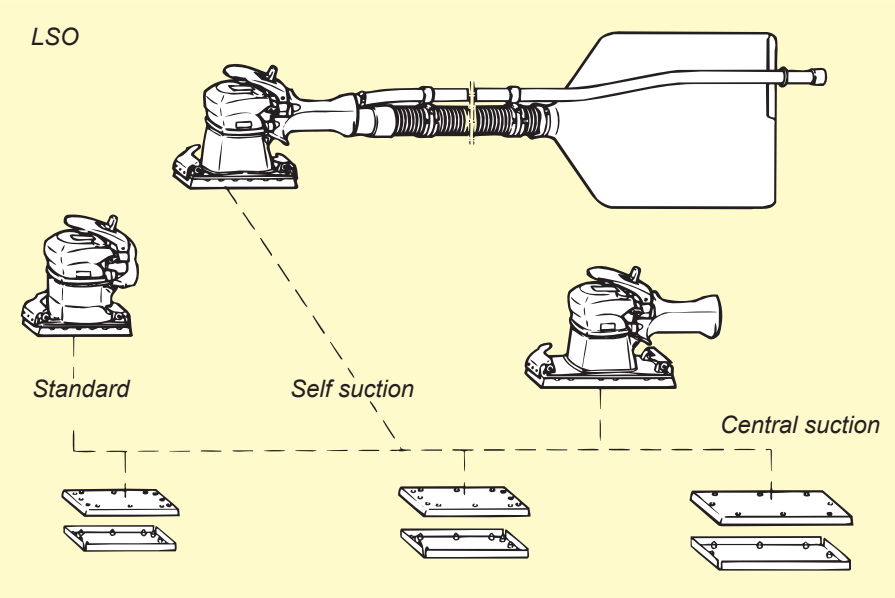

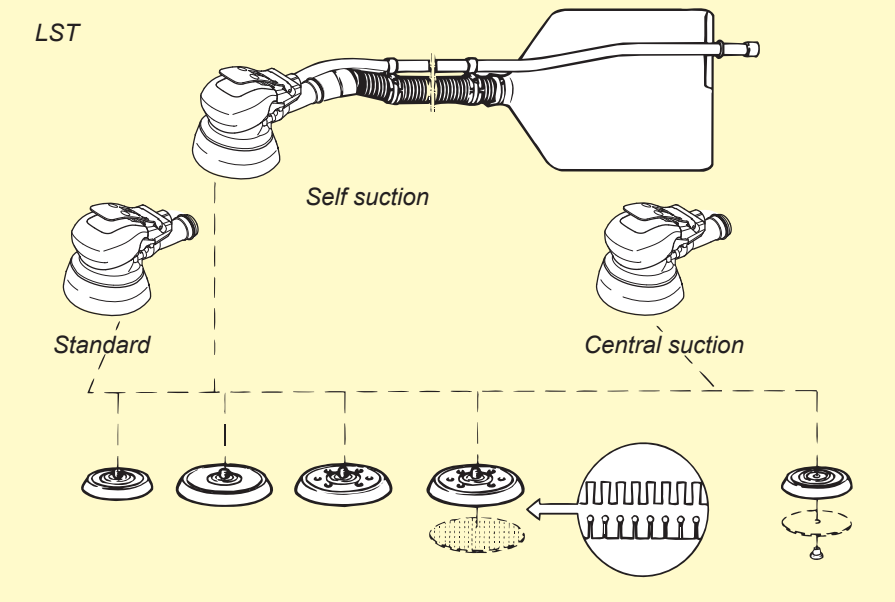

Hole pattern dimensions for sanding paper, dust extraction models

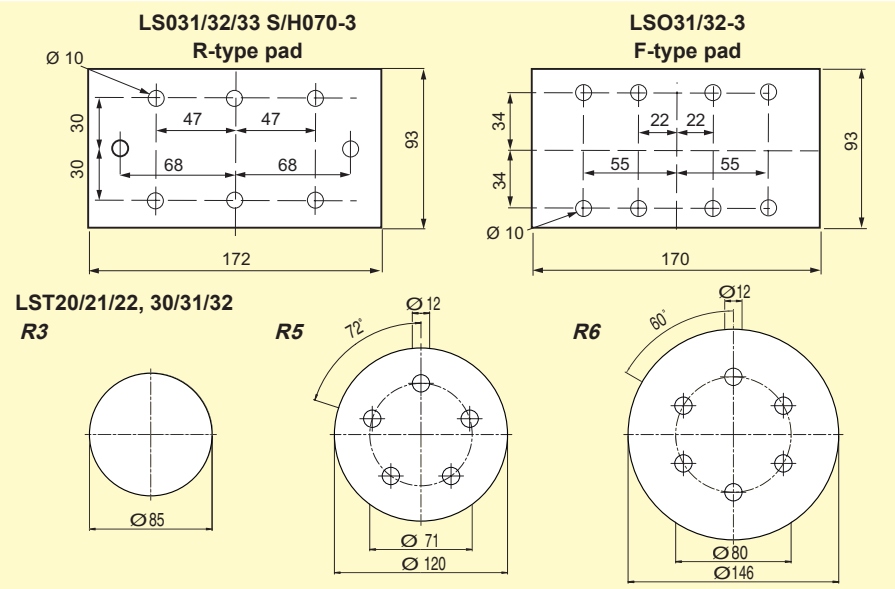

LSO

ACCESSORIES INCLUDED

Base pad
Perforating plate
Hose nipple for 8 mm hose
LSO31 including dust collection kit

OPTIONAL ACCESSORIES

For LSO	Ordering No.
Base pad, vinyl for -3F-type	4112 0787 01
Hose set Dust hose, Ø 32 mm, L=1.8 m including air hose	3780 2724 34[a]
Suspension yoke	4112 0975 00

[a] LSO32

LST20/21/22

ACCESSORIES INCLUDED

Pad for velcro back paper
U-wrench for pad change
Air hose nipple
Dust hose and bag (LST21)
Large and small grip cover

OPTIONAL ACCESSORIES
Pad for self stick paper

	Ordering No.	
Dia 89 mm	Dia 125 mm	Dia 150 mm
For LST20		
4112 1231 00	4112 1233 00	4112 1235 00
For LST21/22		
	4112 1232 00	4112 1234 00

LST30/31/32

ACCESSORIES INCLUDED

Pad for self stick papers
Bar for changing pad
Hose nipple for 8 mm hose
LST31 incl dust collection kit

OPTIONAL ACCESSORIES

For LST	Ordering No.
Pad velcro, Ø 150 mm	4112 0795 01[a]
Pad velcro, Ø 110 mm	4112 0792 02[b]
Pad velcro, Ø 150 mm, 6 holes	4112 0796 00[c]
Hose set Dust hose Ø 32 mm, L=1.8 m including air hose	3780 2724 34[d]
Suspension yoke	4112 0975 00

[a] LST30-15 [b] LST30/32-11 [c] LST31/32-15
[d] LST32

SERVICE KIT

LST20/21/22 4112 1300 90

DUST EXTRACTION

The fact that dust can represent a hazard in the working environment is well documented.

Dust particles from certain materials are dangerous to health. Even inert dust particles that cause no permanent damage can still be retained in the body and make breathing more difficult. The size of dust particles of most concern are those below 0.005 mm.

Efficient dust control can make a significant contribution to efficiency and productivity in industrial operations. It is already a requirement in countries with strict health and safety regulations.

Efficient dust control will:

- Reduce the health risk for operators exposed to potentially dangerous particles.
- Give a more favourable working environment which will encourage greater efficiency and effort from those who operate industrial tools.

The most efficient method of dust collection is dust extraction at the point of dust creation, i.e. on the tool itself. This not only ensures very efficient extraction but also allows a relatively low power vacuum source to be used.

Atlas Copco spot suction kits provide an extraction hood fixed to the tool. It is fitted with a plastic or brush edge to trap heavier particles as well as the small ones. The following pages show a number of applications and the necessary dust extraction kits with their contents.

Model	Max free speed r/min	Max output kW	Max output hp	Weight kg	Weight lb	Height over spindle mm	Height over spindle in	Air consumption at max power l/s	Air consumption at max power cfm	Air consumption at free speed l/s	Air consumption at free speed cfm	Spindle thread	Air inlet thread BSP	Sound level at free speed dB(A)	Ordering No.
GTG21 D120	12000	2.1	2.8	1.6	3.5	92	3.6	30	64	10	21	UNC 5/8"-11	3/8	74	8423 0800 00
GTG21 D085	8500	2.1	2.8	1.6	3.5	92	3.6	30	64	10	21	UNC 5/8"-11	3/8	74	8423 0800 01
LSV48 SA085	8500	1.9	2.5	2.3	5.1	78	3	36	76	17	36	UNC 5/8"-11	1/2	83	8423 0132 02
LSV48 SA066	6600	1.9	2.5	2.3	5.1	78	3	36	76	17	36	UNC 5/8"-11	1/2	83	8423 0132 06
LSV38 D120	12000	1.3	1.7	2.0	4.4	96	3.8	28	58	15	31	UNC 5/8"-11	1/2	83	8423 0800 02
LSV38 D085	8500	1.3	1.7	2.0	4.4	96	3.8	28	58	15	31	UNC 5/8"-11	1/2	83	8423 0800 03
LSV38 D066	6600	1.3	1.7	2.0	4.4	96	3.8	24	50	13	27	UNC 5/8"-11	1/2	83	8423 0800 04

Spot suction kit for GTG 21, LSV 48 and LSV 38

		Application					
		Grinding Depressed centre wheel dia, mm		Sanding Fiber disc dia, mm		Cutting GRP cutting with cutter disc dia, mm	
Model	Ordering No.	125	180	125	180	125	180
GTG21 D120	8423 0800 00	3780 4090 23		3780 4090 24		3780 4090 25	
GTG21 D085	8423 0800 01		3780 4090 21	3780 4090 24	3780 4090 26		3780 4090 22
LSV48 SA085	8423 0132 02		3780 4093 41		3780 4093 40		3780 4093 42
LSV48 SA066	8423 0132 00				3780 4093 40		
LSV38 D120	8423 0800 02	3780 4008 73		3780 4008 85		3780 4008 74	
LSV38 D085	8423 0800 03			3780 4008 85	3780 4008 84		
LSV38 D066	8423 0800 04				3780 4008 84		
Optional accessory							
Cutting disc						3780 5074 61	3780 5074 62

ACCESSORIES

DIE GRINDERS

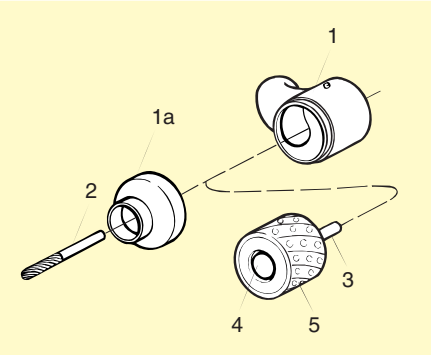

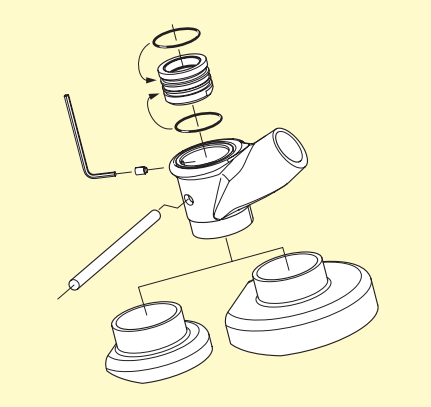

Spot suction kit for die grinders

Suction requirement: 125 m³/h (LSF18), 200 m³/h (LSF28)

				Ordering No.
LSF18 S		1	Chamber for burr	3780 3015 20
	Optional	2	Diamond burr 6 mm	3780 5013 70
LSF18 S			**KIT for drum**	3780 4011 60
	Includes	1	Chamber	3780 3015 20
		3	Shaft dia 6 mm	3780 5090 30
		4	Locking screw	3780 5090 60
	Optional	5	Diamond drum 27 mm	3780 5033 00
LSF28 S			**KIT for burr**	3780 4007 41
	Includes	1	Chamber	3780 3300 51
		1a	Nozzle	3780 2730 10
LSF28 S			**KIT for drum**	3780 4011 71
	Includes	1	Chamber	3780 3300 51
		3	Shaft 8 mm	3780 5091 00
			Distance nut	3780 5091 50
		4	Locking nut	3780 5092 00
	Optional	5	Diamond drum, Ø 50 mm	3780 5035 00
LSV 18 S-1			**KIT for sanding pad dia 50 and 75 mm**	3780 4092 62
	Includes	2	O-ring 23x1.6	0663 2103 85
		3	Clamp ring	4112 1065 04
		4	Flow chamber	3780 3027 61
		5	Lock screw M4x6 A1	0192 1168 00
		6	Lock pin	4112 0779 00
		7	Suction cap 50 mm	3780 2782 90
		8	Suction cap 75 mm	3780 2782 91
		9	Hexagon wrench 2 mm	3780 9902 10

ROUGH GRINDERS FOR DEPRESSED CENTRE AND CUT OFF WHEEL

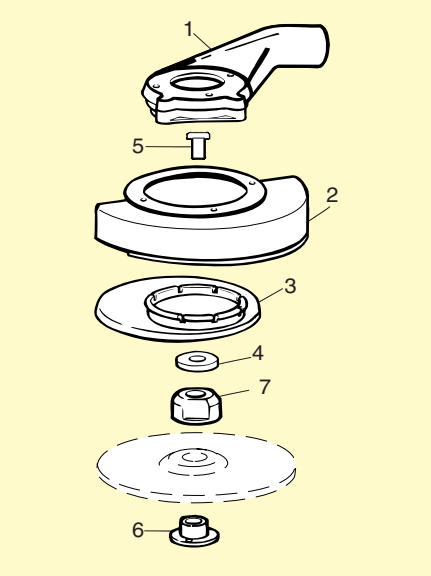

Spot suction kit for depressed centre wheels

Suction requirement: 250 m³/h

				Ordering No.
LSV28 ST12 125 mm wheel			**KIT**	3780 4008 70
	Includes	1	Chamber	3780 3101 10
		2	Wheel guard 125 mm	3780 2726 43
		3	Suction cap 125 mm	3780 2500 20
		4	Distance washer	4150 1364 00
		5	Adaptor UNF 3/8" UNC 5/8"	4021 0457 00
		6	Nut UNC 5/8"	3780 2722 00
LSS53 S085 18 180 mm wheel			**KIT**	3780 4011 10
	Includes	1	Chamber	3780 3101 00
		2	Wheel guard 180 mm	3780 2726 50
		3	Suction cap 180 mm	3780 2500 10
		7	Flange EN 68	4170 0758 00
		6	Nut 5/8"	3780 2722 00

Hose kits including 1.8 m vacuum
hose Ø 38 mm and air hose Ø 13 mm (Ø 10 mm for LSV28)

LSV28	3780 2724 40
LSS53	3780 2724 41

SANDERS FOR FIBRE DISC

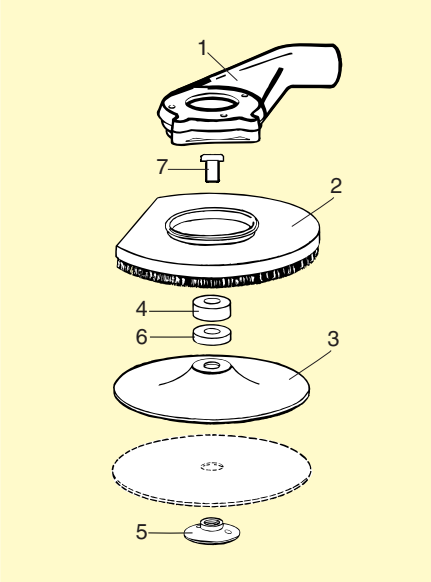

Spot suction kit for sanding with fibre disc. Sanders with UNC 5/8" spindle.
Suction requirement: 250 m³/h

				Ordering No.
LSV28 S040/S060/S085 125 mm		**KIT**		3780 4007 80
	Includes	1	Chamber	3780 3100 40
		2	Suction cap 125 mm with brush	3780 2650 20
		3	Backing pad 125 mm	3780 2710 30
		4	Distance washer 12 mm	3780 2721 60
		5	Nut 5/8"	3780 2722 00
LSV28 ST12-13 125 mm		**KIT**		3780 4008 60
	Includes	1	Chamber	3780 3101 10
		2	Suction cap 125 mm with brush	3780 2650 20
		3	Backing pad 125 mm	3780 2710 30
		6	Distance washer 9 mm	3780 2721 50
		7	Adaptor UNF 3/8" UNC 5/8"	4021 0457 00
		5	Nut 5/8"	3780 2722 00
LSV28 S040/S060 180 mm		**KIT**		3780 4007 90
	Includes	1	Chamber	3780 3100 40
		2	Suction cap 180 mm with brush	3780 2675 00
		3	Backing pad 180 mm	3780 2710 60
		6	Distance washer 9 mm	3780 2721 50
		5	Nut 5/8"	3780 2726 70
LSV28 S021 180 mm		**KIT**		3780 4031 60
	Includes	1	Chamber	3780 6101 50
		2	Suction cap 180 mm with brush	3780 2675 00
		3	Backing pad	3780 2710 60
		6	Distance washer 12 mm	3780 2721 60
		5	Nut 5/8"	3780 2726 70
LSS53 S060 180 mm		**KIT**		3780 4011 00
	Includes	1	Chamber	3780 3101 00
		2	Suction cap 180 mm with brush	3780 2675 00
		3	Backing pad 180 mm	3780 2710 60
		4	Distance washer 12 mm	3780 2721 60
		5	Nut 5/8"	3780 2726 70
GTG40 S060 180 mm		**KIT**		3780 4090 10
	Includes	1	Chamber	3780 3180 10
		2	Suction cap 180 mm with brush	3780 2675 30
		3	Backing pad 180 mm	3780 2710 30
		4	Distance washer 3 mm	3780 2721 30
		5	Flange nut 5/8"	3780 2722 00

Hose kits including 1.8 m vacuum hose, Ø 38 mm and air hose Ø 13 mm (Ø 10 mm for LSV28)

LSV28	3780 2724 40
LSV38/41, LSS53, GTG21/40	3780 2724 41

Brush for suction cap	
Separate brush for cap Ø 125 mm	3780 2678 00
Separate brush for cap Ø 180 mm	3780 2677 50
Separate brush (30 mm high) for cap Ø 180 mm	3780 2677 30
Cover with brush for suction cap Ø 180 mm	3780 2675 03

ROUTERS

Pattern fixture cutting of composite in the aerospace industry as well as trimming of composite materials is preferably done with a router. The LSK37 is the only router with dust extraction and support bearing integrated into one unit. This gives the LSK37 excellent performance and ergonomics in most composite applications.

- **Productive** – The speed governor maintains the rotational speed at applied feed-force which enables fast and effective cutting and prevents the bit from clogging.
- **Ergonomic** – An integrated dust extraction hood for deportation of hazardous dust, thermally isolated throttle handle, sound dampening exhaust valve and piped-away exhaust air provides the operator with the best working environment.

Model	Free speed r/min	Collet size	Weight kg	Weight lb	Power kW	Power hp	Air consumption l/s	Air consumption cfm	Recommended hose size mm	Recommended hose size in	Hose fitting thread BSP	Ordering No.
LSK37 S250-DS1	25000	6 mm	2.8	6.1	0.7	0.95	18	32	13	1/2	3/8	8423 1234 41
LSK37 S250-DS2	25000	1/4"	2.8	6.1	0.7	0.95	18	32	13	1/2	3/8	8423 1234 42

Suction requirement: 200 m^3/h.

NIBBLER

The Atlas Copco LPN33 nibbler can cut iron sheet up to 2 mm in thickness and aluminium sheet in thicknesses up to 2.5 mm.

- **Sturdy design** – To ensure optimal tool life, the cutter and die insert are made of tungsten carbide and the other parts of the nibbler head of high-grade steel.
- **Good accessibility** – The cutter works in upward direction reducing the risk of die failure. The die insert has cutting edges all round and can be rotated through 360° before being worn out.
- **Piped-away exhaust air** – Some of the exhaust air is conducted through the nibbler head so as to blow out the chips and cool the cutter.

Model	Nibbler cutting speed 2 mm sheet m/min	Max sheet thickness mm Steel	Max sheet thickness mm Stainless	Max sheet thickness mm Aluminium	Weight kg	Weight lb	Length mm	Rec. hose size mm	Rec. hose size in	Hose fitting thread BSP	Ordering No.
LPN33	1.6	2.0	1.0	2.5	2.1	4.6	270	10	3/8	1/4	8424 0301 07*

* Available directly from stock.

ACCESSORIES INCLUDED

3 mm hexagon wrench

Hose fitting for 10 mm air hose

CIRCULAR CUTTERS

Cutting operations in glass and carbon fibre as well as metal sheet, wood and steel can successfully be performed with a circular cutter.

- **Effective** – LCS10 and -38 cut to a depth of 10 and 26 mm respectively.
- LCS38 is suitable for diamond coated blades only.
- **Dust extraction** – Cutting of composite materials generates dust containing particles hazardous to health. The dust must be deported in order to prevent the operator from inhaling them.

LCS38 is equipped with a cutter blade guard with integrated dust extraction hood for external vacuum source.

Model	Free speed r/min	Max output kW	Max output hp	Max cutting depth mm	Max cutter blade dia mm	Weight kg	Weight lb	Air consumption at free speed l/s	Air consumption at free speed cfm	Rec. hose size mm	Rec. hose size in	Air inlet thread BSP	Sound level at free speed dB(A)	Ordering No.
Circular cutters														
LCS10	3000	0.3	0.4	10	50	1.4	3.1	7.6	16	6.3	1/4	1/4	91	8424 1161 38*
LCS38 S150D[a]	15000	1.3	1.7	26	100	1.7	3.7	28.0	58	13.0	1/2	3/8	84	8424 1125 06*

[a] Suction requirement: 200 m^3/h.

* Available directly from stock.

ACCESSORIES INCLUDED

LCS10

Cutter blade, 62 teeth

Hexagon wrench

Hose nipple for 6.3 mm air hose

LCS38

Flanges for diamond blade

Hose nipple for 13 mm air hose

OPTIONAL ACCESSORIES. Cutter blades

Model	Application	Max thickness of material mm	No. of teeth mm	Dia mm	Hole mm	Ordering No.
LCS10	Steel sheet	1.0	92	50	10	4190 0394 00
	Steel sheet	1.0	62	50	10	4190 0395 00 (std)
	Aluminium	2.5	34	50	10	4190 0396 00
	Wood	10.0	34	50	10	4190 0396 00
LCS38	Glassfibre	18.0	44/60 (Grain)	75	12	3780 5073 00
	Glassfibre	25.0	44/60 (Grain)	100	12	3780 5074 00

OPTIONAL ACCESSORIES

Model	Ordering No.
Suction hose set (L= 5.9 in, Dia 1 1/4") for LCS38	3780 2724 31
Bladeguard for LCS10	4150 1964 00

Percussive tools

Choose Atlas Copco and you've cracked it!

Chipping hammers, riveting hammers, rammers, scalers and bucking bars – our percussive tools make light of the toughest jobs. The vibration-damped range includes sophisticated ergonomic features designed to minimize operator fatigue.

Contents **Page**

Safety guidelines 208
Chipping hammers – vibration-damped and silenced 209
Chipping hammers 210
Scaler – vibration-controlled 211
Scalers.....212
Needle scaler.....213
Rust and weld scalers 214
Riveting system 215
Riveting hammers – vibration-damped.....216
Bucking bars – vibration-damped.....218
Riveting hammers – conventional type.....220
Chisels.....221
Rammers.....224

PERCUSSIVE TOOLS

Safety guidelines

IMPORTANT: All local safety regulations with respect to installation, operation and overhaul must always be followed.

AVOID ACCIDENTS

1 The chisel, die or punch may fall out or may be shot out of the tool accidentally causing serious injury.

To prevent injury from a flying chisel:
- Always use a retainer.
- Inspect the retainer for wear or damage regularly.

- Be aware that the chisel may break during operation.
- Never trigger a hammer unless held against a work piece.
- Remove chisel, die or punch from tool when work is over.
- When finishing a job, disconnect the tool from its air supply.
- Before changing accessories, chisel or die – disconnect the tool from the air supply.

2 Chips and sparks shall be prevented from striking an eye or another worker.

To prevent vision loss:
- Always wear eye protection.
- Isolate work of this kind by using barriers between work stations.
- Do not use the tool for other purposes than it is intended for.

3 Gloves protect fingers from pinching, scuffing and scraping.
- Protectives shoes may prevent your feet from being injured.

4 Explosive atmosphere must not be ignited.

To prevent injury and property loss from fires:
- Use other technique.
- Use accessories of non sparking material (e.g. needle attachment of Beryllium copper for a needle scaler).

5 Electric shock may be fatal.
- Avoid chiseling into electric wiring hidden inside walls etc.

LONG TERM RISKS

6 Always use ear protection.

To prevent gradual loss of hearing due to exposure to high noise level – wear ear protection.

7 Vibration may be harmful to hands and arms.

- Use vibration dampened tools if available.
- Reduce the total time of exposure to vibrations, particularly if the operator has to guide the chisel by hand.

8 Dust generated during operation may be harmful.
- Use spot suction or a breathing apparatus.

PROPER USE AND MAINTENANCE

9 Do not perform idle blows with a hammer.

- They will cause high internal stresses and shorten the life of the tool.
- Note the risk of shooting out the chisel, die or punch if the retainer is not in order or damaged.

10 Quick coupling.

- If a coupling is used on a percussive tool, it shall be separated from the tool by a whip hose (length 0.5 m).

11 Follow the tool manual and the lubrication instructions.

12 Make overhaul at regular intervals.

CHIPPING HAMMERS

Vibration-damped and silenced

Tough on the job – easy on you

Choose the tools that give the best results in the toughest working conditions, yet are easy on the operator. These are effective, reliable tools for fettling of castings, chipping operations in the mechanical industry, hole making and light demolition of concrete.

- **RRF21/31** have a sturdy D-handle in light metal alloy for a high power-to-weight ratio and steady grip. The compact, vibration-controlled (2.5 m/s²) design offers good accessibility and ease of use.
- **RRD37/57** are light, quiet and have a long service life. They have light alloy tool casings, very low vibration (below 2.5 m/s²) and noise levels, vibration damping in both hand grips, and piped away exhaust.

Model	Blows Hz	Piston dia mm	Piston dia in	Stroke mm	Stroke in	Energy per blow J	Energy per blow ft lb	Length mm	Weight kg	Weight lb	Bushing mm	Bushing in	Air consumption l/s	Air consumption cfm	Hose size mm	Hose size in	Air inlet BSP	Ordering No.
Chipping hammers vibration damped																		
RRF21-01	57	18	0.7	33	1.3	2.0	1.5	245	1.75	3.3	12.7[c]	0.50	6.5	13.8	10.0	3/8	3/8	8425 1104 05*
RRF31-01	38	22	0.9	43	1.7	4.4	3.2	265	2.5	5.3	12.7[c]	0.50	7.5	15.9	10.0	3/8	3/8	8425 1104 15*
RRD37-11	35	27/19[a]	1.1/0.8	70	2.8	6.8	5.0	418	3.0	6.6	17.3[d]	0.68	7.2	15.3	12.5	1/2	special[e]	8425 1101 22*
RRD37-12	35	27/19[a]	1.1/0.8	70	2.8	6.8	5.0	418	3.0	6.6	17.3[d]	0.68	7.2	15.3	12.5	1/2	special[e]	8425 1101 30
RRD57-11	31	28/18[b]	1.1/0.8	92	3.6	9.3	6.9	458	3.4	7.5	17.3[d]	0.68	9.5	20.1	12.5	1/2	special[e]	8425 1103 20*
RRD57-12	31	28/18[b]	1.1/0.8	92	3.6	9.3	6.9	458	3.4	7.5	17.3[d]	0.68	9.5	20.1	12.5	1/2	special[e]	8425 1103 38

[a] Effective piston dia 19 mm, 0.75 in.
[b] Effective piston dia 21.5 mm, 0.85 in.
[c] ISO.
[d] Spline.
[e] Integrated hose barb.

-01 and -11: Guided models,
-02 and -12: Non guided models.

* Available directly from stock.

DIMENSIONS (mm)

Model	L	H	D
RRF21	245	160	33
RRF31	265	170	36
RRD37	418	175	–
RRD57	458	190	–

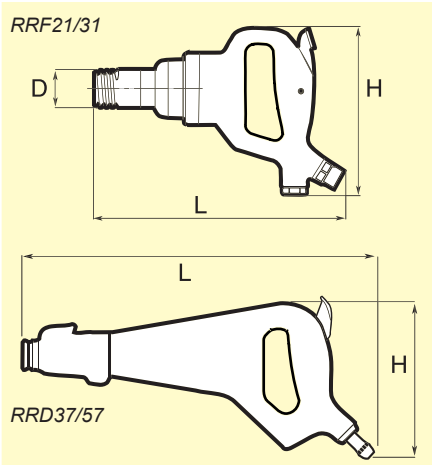

Power regulator

Model	Ordering No.
RRF21 and -31	3512 0273 80

Retainer, open type

Model	Ordering No.
RRF21	3512 0290 90
RRF31	3512 0305 90

ACCESSORIES INCLUDED

RRF models	Chisel retainer and a hose fitting
RRD models	Flat chisel
	Silencer complete
	Hand grip
	Key

OPTIONAL ACCESSORIES

A selection of chisels

RRF21/31	ISO 12.7 mm
RRD37/57	ISO with splines

For a wide choice of chisels, see page 221.

CHIPPING HAMMERS

Atlas Copco RRC chipping hammers are used mainly in foundries, in heavy industry and for hole-making and light demolition in the building industry.

- **Dependable** – Their robust construction makes them highly dependable.
- **Efficient** – RRC65 and RRC75 have a blow rate which makes them particularly suitable for roughening.
- **Chisel retainer** – for safer jobs – RRC22-RRC75 are delivered with a chisel retainer as standard. For the same reason choose a tool that can be guided via the machine itself and not by holding the chisel.

As standard, Atlas Copco chipping hammers of series RRC are delivered with a standard, guided ISO hexagon nozzle (-01) or a round, non guided shank nozzle (-02).

Model	Blows Hz	Piston dia mm	Piston dia in	Stroke mm	Stroke in	Energy per blow J	Energy per blow ft lb	Length mm	Weight kg	Weight lb	Bushing mm	Bushing in	Air consumption l/s	Air consumption cfm	Hose size mm	Hose size in	Air inlet BSP	Ordering No.
Chipping hammers including chisel retainer																		
RRC22F-01	62	15	0.6	52	2.0	2.7	2.0	260	2.2	4.9	12.7[a]	0.50	6.2	13.1	10	3/8	3/8	8425 0202 22*
RRC22F-02	62	15	0.6	52	2.0	2.7	2.0	260	2.2	4.9	12.7[a]	0.50	6.2	13.1	10	3/8	3/8	8425 0202 30*
RRC34B-01	45	24	0.9	67	2.6	5.5	4.1	330	4.5	9.9	17.3[a]	0.68	8.0	14.0	12.5	1/2	special[b]	8425 0212 53*
RRC34B-02	45	24	0.9	67	2.6	5.5	4.1	330	4.5	9.9	17.3[a]	0.68	8.0	17.0	12.5	1/2	special[b]	8425 0212 61
RRC65B-01	40	29	1.1	50	2.0	10.0	7.3	335	5.9	13.0	17.3[a]	0.68	10.8	22.9	12.5	1/2	special[b]	8425 0225 33*
RRC65B-02	40	29	1.1	50	2.0	10.0	7.3	335	5.9	13.0	17.3[a]	0.68	10.8	22.9	12.5	1/2	special[b]	8425 0225 41
RRC75B-01	30	29	1.1	75	3.0	16.0	11.8	390	6.5	14.3	17.3[a]	0.68	14.0	29.6	12.5	1/2	special[b]	8425 0225 58*

[a] ISO.

[b] Integrated hose barb.

* Available directly from stock.

DIMENSIONS (mm)

Model	L	H	D
RRC22	260	155	34
RRC34	330	160	43
RRC65	335	170	54
RRC75	390	170	54

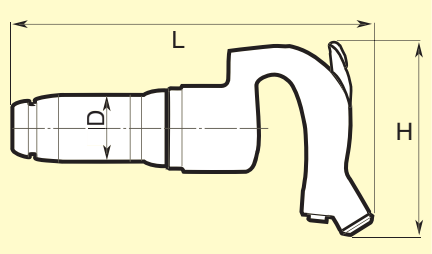

ACCESSORIES INCLUDED

RRC22F, RRC34B, RRC65B, RRC75B — Chisel retainer and hose fitting

OPTIONAL ACCESSORIES

A selection of chisels fitting -01, -02 type, see page 221.

SCALER
Vibration-controlled

Scaler RVM07B is ideal for tasks such as weld dressing, etc.

- **Vibration-damped with low-noise level.**
- **Vibration is very low** (below 2.5 m/s²).
- **Two-job capacity** – RVM07B features a clean-blowing device (B) which is very useful for clean-blowing work on steel structures etc.
- **RVM07B** is the obvious choice for light concrete trimming and for removal of paint and rust.

Model	Blows Hz	Length mm	Weight incl. standard chisel kg	lb	Air consumption l/s	cfm	Hose size mm	in	Air inlet BSP	Ordering No.
Scalers										
RVM07B	100	273	1.7	3.8	3.8	8.1	6.3	1/4	1/4	8425 0105 25*

* Available directly from stock.

DIMENSIONS (mm)

Model	L	D
RVM07B	273	38

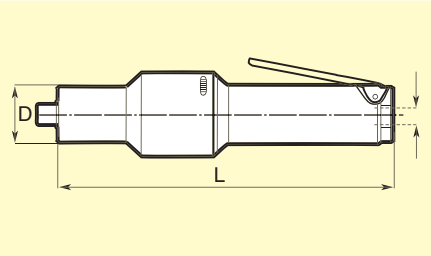

ACCESSORIES INCLUDED

Hose fitting

Flat carbide tipped chisel 10x120 mm

OPTIONAL ACCESSORIES

Carbide tipped chisels and through hardened chisels with other length and width.
See page 221.

SCALERS

Choose between two different models for heavy slag chipping and for instant trimming of concrete.

- **High removal rate** – RRC13 is very effective and has a high removal rate in relation to its low weight.
- **Well proven** percussive mechanism and retainer.
- **Two-job capacity** – RRC13B with extra clean-blowing device.
- **Improved back head** – Throttle valve and lever with really Heavy Duty performance for long service life. Clean blowing system with twice the previous blow capacity. Big blow button for easy operation and sturdy valve stem to resist rough handling.

Model	Blows Hz	Piston dia mm	Piston dia in	Stroke mm	Stroke in	Energy per blow J	Energy per blow ft lb	Length mm	Weight kg	Weight lb	Air consumption l/s	Air consumption cfm	Hose size mm	Hose size in	Air inlet BSP	Ordering No.
Scalers																
RRC13	73	15	0.6	35	1.4	1.4	1.0	221	1.4	3.1	4.0	8.0	10	3/8	3/8	8425 0101 30*
RRC13B	73	15	0.6	35	1.4	1.4	1.0	231	1.6	3.5	4.0	8.0	10	3/8	3/8	8425 0101 33*

* Available directly from stock.

DIMENSIONS (mm)

Model	L	H	D_1	D_2
RRC13	221	65	45	41.5
RRC13B	231	65	45	41.5

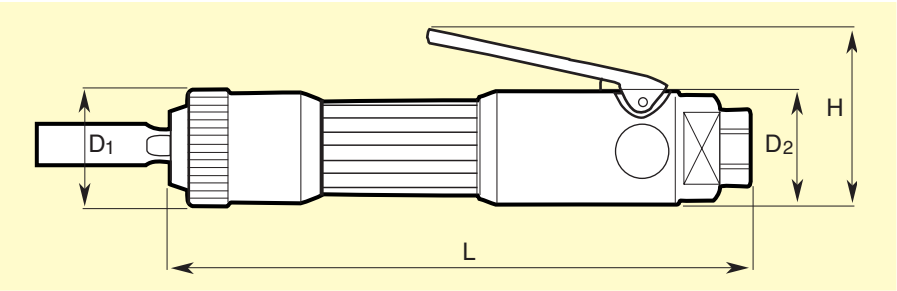

ACCESSORIES INCLUDED

Hose fitting

Scaling chisel

OPTIONAL ACCESSORIES

RRC13 / RRC13B	Ordering No.
Hand guard	3510 0246 90
All steel retainer	3510 0245 80
Silencer	3510 0366 80

Chisels for RRC13 and -13B:
Square shank 13.0 mm.

For a wide choice of chisels, see page 221.

NEEDLE SCALER

The effective needle scaler, type RRC13N, is based on the same fundamental design as the straight chipping hammers of type RRC13 described above.

- **Sturdy design** – Easy to maintain.
- **Versatile** – The needle scaler is used to remove welding slag, rust and paint from steel structures.

Model	Blows Hz	Piston dia mm	Piston dia in	Stroke mm	Stroke in	Energy per blow J	Energy per blow ft lb	Length mm	Weight kg	Weight lb	Air consumption l/s	Air consumption cfm	Hose size mm	Hose size in	Air inlet BSP	Ordering No.
Scaler																
RRC13N	73	15	0.6	35	1.4	1.4	1.0	352	1.9	4.2	4.0	8.0	10	3/8	3/8	8425 0101 36*

* Available directly from stock.

DIMENSIONS (mm)

Model	L_1	L_2	D
RRC13N	282	352	38

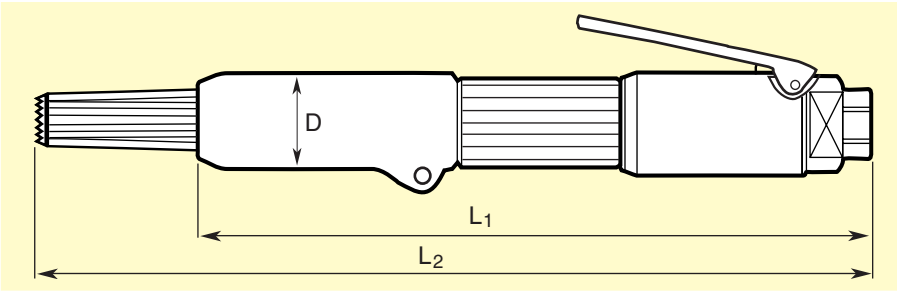

ACCESSORIES INCLUDED

Hose fitting
Needle set (steel)

OPTIONAL ACCESSORIES

Needle-set of 19 needles, length 100 mm

Material	Ordering No.
Steel, standard	3510 0221 90
Steel flat ends	3510 0227 90
Stainless steel flat ends	3510 0228 90
Beryllium copper flat ends (spark resistant)	3510 0229 90

RUST AND WELD SCALERS

The RP rust and weld scaler is designed for removal of rust, paint and other coating from steel structures, steam boilers etc.

- **Easy to maintain** – The 4-point bit, with cemented carbide insert, is replaceable.
- **Two models for flexible work** – The rust and weld scaler is available in versions with 1 impact head (RP1) and with 3 impact pistons (RP3).

Model	Blows Hz	Length mm	Weight kg	Weight lb	Air consumption l/s	Air consumption cfm	Hose size mm	Hose size in	Air inlet BSP	Ordering No.
Scalers										
RP1	69	485	2.0	4.4	3.2	6.8	10	3/8	3/8	8425 0301 06*
RP3	69	515	3.9	8.6	9.6	20.3	10	3/8	3/8	8425 0301 14*

* Available directly from stock.

DIMENSIONS (mm)

Model	L	H	C
RP1	485	80	–
RP3	515	80	180

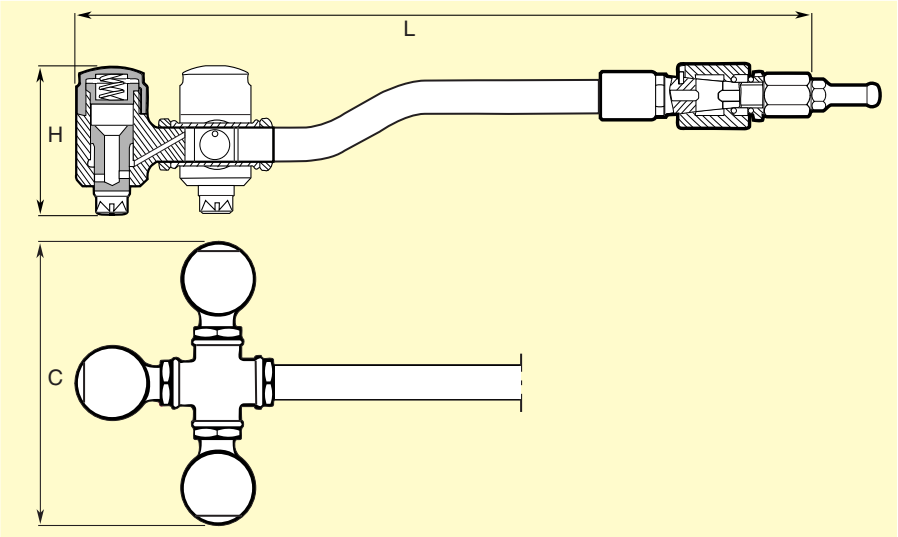

ACCESSORIES INCLUDED

Hose fitting

Four-point carbide bit, length 55 mm

OPTIONAL ACCESSORIES

RP1 and RP3	Ordering No.
Vibration-damped support handle	3550 0079 80

How to find a suitable hammer and bucking bar

The Atlas Copco riveting system includes vibration-damped hammers RRH and bucking bars RBB – as well as conventional riveting hammers RRN.

The vibration-damped riveting hammers – RRH – are available in different sizes, RRH04P, RRH06P, RRH08P, RRH10P and RRH12P.

Each size is available in “Trigger start” and '“Push to start” models.

The conventional riveting hammer – RRN – is available in one size: RRN11P.

The number of blows and the power are critical factors which determine the strength of a riveted joint. A few powerful blows are needed to fill out the hole and form a head when upsetting the rivet. The impact force is critical to some extent when working with aluminium alloys, as too many blows can embrittle the metal.

In terms of capacity, the tools overlap. The table on page 217 helps you to find the right tool for your particular application of riveting.

The vibration-damped bucking bars RBB are available in two versions – the simple spring damped – SP type and the air servo assisted SA type. There are three sizes RBB04, RBB10 and RBB16.

RIVETING HAMMERS

Vibration-damped

RRH is a unique series of riveting hammers incorporating completely revolutionary ergonomic advantages.

- **Versatile** – RRH can easily cope with rivets in diameters up to 12 mm.
- **Vibration-damped system** – The RRH vibration-damped riveting hammer, combined with the RBB vibration-damped bucking bar, offer an unbeatable system for riveting.
- **Adjustable power.**
- **Adjustable hand guard** – Support hand grip is vibration-damped.
- Now new models with trigger start for excellent handling. Pistol grip with rubber coating.

Model	Blows Hz	Nozzle mm	Nozzle in	Piston dia mm	Piston dia in	Stroke mm	Stroke in	Energy per blow J	Energy per blow ft lb	Weight kg	Weight lb	Air consumption l/s	Air consumption cfm	Hose size mm	Hose size in	Air inlet BSP	Ordering No.
Riveting hammers with push start																	
RRH04P-01	66	10.0	0.4	15	0.6	40	1.6	2.0	1.5	1.0	2.2	3.7	6	6.3	1/4	1/4	8426 1109 07*
RRH04P-02	66	10.2	0.4	15	0.6	40	1.6	2.0	1.5	1.0	2.2	3.7	6	6.3	1/4	1/4	8426 1109 15*
RRH04P-12	66	10.2	0.4	15	0.6	40	1.6	2.0	1.5	1.0	2.2	3.7	6	6.3	1/4	1/4	8426 1109 25
RRH06P	36	10.2	0.4	15	0.6	102	4.0	6.0	4.4	1.3	2.9	9.0	19	10.0	3/8	1/4	8426 1110 04*
RRH08P	24	10.2	0.4	15	0.6	137	5.4	8.0	5.9	1.4	3.0	10.0	21	10.0	3/8	1/4	8426 1110 09
RRH10P	25	12.7	0.5	19	0.7	118	4.6	13.0	9.6	2.0	4.4	12.0	24	10.0	3/8	1/4	8426 1110 20*
RRH12P	20	12.7	0.5	19	0.7	153	6.0	16.0	11.8	2.1	4.6	13.0	28	10.0	3/8	1/4	8426 1110 47*
Riveting hammers with trigger start																	
RRH04P TS-12	66	10.2	0.4	15	0.6	40	1.6	2.0	1.5	1.0	2.2	3.7	6	6.3	1/4	1/4	8426 1109 27*
RRH06P TS	36	10.2	0.4	15	0.6	102	4.0	6.0	4.4	1.3	2.9	9.0	19	10.0	3/8	1/4	8426 1110 66*
RRH08P TS	24	10.2	0.4	15	0.6	137	5.4	8.0	5.9	1.4	3.0	10.0	21	10.0	3/8	1/4	8426 1110 68*
RRH10P TS	25	12.7	0.5	19	0.7	118	4.6	13.0	9.6	2.0	4.4	12.0	24	10.0	3/8	1/4	8426 1110 70*
RRH12P TS	20	12.7	0.5	19	0.7	153	6.0	16.0	11.8	2.1	4.6	13.0	28	10.0	3/8	1/4	8426 1110 72*

-01 means 10 mm short shank rivet set.
-02 means 10.2 mm short shank rivet set.
-12 means 10.2 mm stand shank rivet set.

* Available directly from stock.

DIMENSIONS (mm)

Model	L	H	C
RRH04-01	160	147	23
RRH04-02	160	147	23
RRH04-12	175	147	23
RRH06	225	147	24
RRH08P	244	147	24
RRH10P	264	150	27
RRH12P	299	150	27

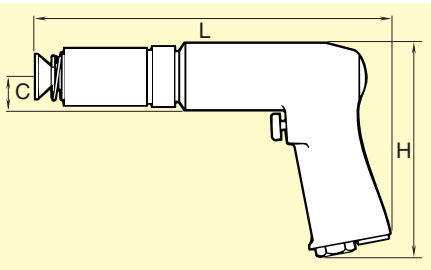

Kits for conversion to trigger start operation

Model	Ordering No.
RRH04P-12	3520 0363 80
RRH06/08P	3520 0210 81
RRH10/12P	3520 0364 80

ACCESSORIES INCLUDED

Hose fitting
Flush set
Open spring retainer

OPTIONAL ACCESSORIES

Blank and flush rivet sets, see page 217.

RIVETING HAMMERS

Selection guide

Hammer model[a]	Nominal Max. Rivet Diameter Capacity: Dural mm	Dural in	Steel mm	Steel in	Titanium mm	Titanium in	Bucking bar model required[b]	
RRH04	2- 5	3/32 - 3/16	1- 4	3/21 - 5/32			RBB04	RBB10
RRN11	2- 5	3/32 - 3/16	1- 4	3/32 - 5/32				
RRH06	4- 7	5/32 - 1/4	3- 6	1/8 - 1/4	2- 4	3/32 - 5/32	RBB10	RBB16
RRH08	5- 8	3/16 - 5/16	4- 7	5/32 - 1/4	3- 6	1/8 - 1/4	RBB10	RBB16
RRH10	5- 9	3/16 - 3/8	6- 8	1/4 - 5/16	4- 7	5/32 - 1/4	RBB16	
RRH12	8-11		7-10	1/4 - 3/8	6- 9	1/4 - 1/8	RBB16	

[a] Hammer capacity depends on direct/indirect riveting as well as Panel density and stiffness.

[b] Bucking bar capacity is dependent on dolly weight.

RIVET SETS. RRH and RRN

Hammer type	Model	Shank mm		Flush set Ordering No.		Blank rivet set Ordering No.
RRH04P-01 RRN11P-01	(–01)	10.0 spec	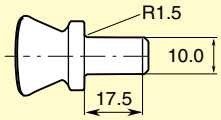	3085 0347 00	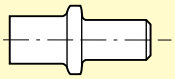	3006 0983 00
RRH04P-02 RRN11P-02	(–02)	10.2 spec	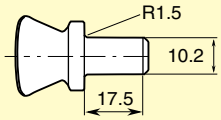	3085 0352 00	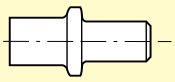	3085 0353 00
RRH04P-12 RRH06P RRH08P RRN18P RRN24P	(–12)	10.2 std 10.2 std 10.2 std 10.2 std 10.2 std	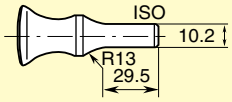	3085 0324 00	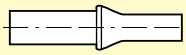	3085 0022 00
RRH10P/s RRH12P RRN34P		12.7 std 12.7 std 12.7 std	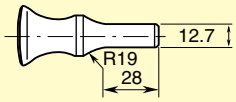	3085 0323 00	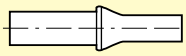	3085 0021 00
RRH04P-12 RRH06P RRH08P		10.2 std			Mandrel blank 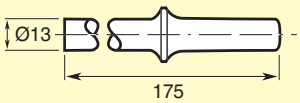	3085 0212 00
RRH04P-12 RRH06P RRH08P		10.2 std			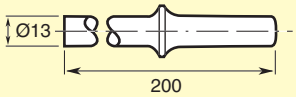	3085 0212 02

BUCKING BARS
Vibration-damped

An efficient riveting system consists of vibration-damped bucking bars together with vibration-damped riveting hammers.

- **Self-adjustable** – RBB10SA and RBB-16SA feature a self-adjusting damping system which requires a compressed air supply. RBB04SP, RBB10SP and RBB16SP use a spring as damping element and consequently do not require an air supply.
- **Flexible** – The bucking bars can be fitted with several different interchangeable dolly configurations via a quick change retainer for maximum flexibility.
- **Cramped spaces** – Mini bucking bars RBB04SP are ideal for work in confined spaces. The large mass types -04, -05 will in most applications set the rivet faster than the smaller models.

Model	Weight kg	Weight lb	Diameter mm	Diameter in	Air consumption l/s	Air consumption cfm	Ordering No.
Bucking bars with standard dolly[a]							
RBB10SA	1.3	2.9	48	2.0	0.5	1.1	8426 9101 77
RBB10SP	1.1	2.4	48	2.0	–	–	8426 9101 74
RBB16SA	1.9	4.2	48	2.0	0.5	1.1	8426 9101 78
RBB16SP	1.7	3.7	48	2.0	–	–	8426 9101 76
Bucking bars without dolly and rod							
RBB10SA-U	1.0	2.2	48	2.0	0.5	1.1	8426 9101 73
RBB10SP-U	0.9	2.0	48	2.0	–	1.1	8426 9101 86
RBB16SA-U	1.7	3.7	48	2.0	0.5	1.1	8426 9101 75
RBB16SP-U	1.5	3.3	48	2.0	–	–	8426 9101 94
Mini bucking bars							
RBB04SP-01	0.8	1.8	46	1.8	–	–	8426 9101 10*
RBB04SP-02	0.8	1.8	46	1.8	–	–	8426 9101 11
RBB04SP-03	0.8	1.8	46	1.8	–	–	8426 9101 12
RBB04SP-04	1.3	2.9	46	1.8	–	–	8426 9101 13*
RBB04SP-05	1.4	3.1	46	1.8	–	–	8426 9101 14

[a] Standard dolly assy (3085 0335 93).

* Available directly from stock.

DIMENSIONS (mm)

Model	L	H	C
RBB10SA/SP	165	49	140
RBB16SA/SP	200	49	198

Dollies other than standard, see page 219.

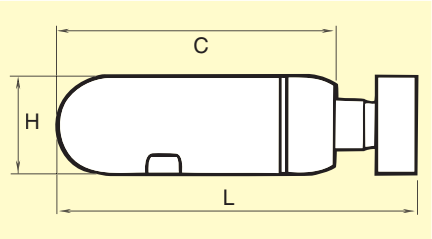

ACCESSORIES INCLUDED

All SA-models	Hose and hose fitting
All 10/16 models	Plastic cover

OPTIONAL ACCESSORIES

Designation	Ordering No.
Rod 5 mm	3085 0365 03
Rod 50 mm	3085 0365 04
Rod 100 mm	3085 0365 05
Plastic cover for	
RBB10SA	3520 0317 00
RBB10SP	3520 0315 00
RBB16SA	3520 0318 00
RBB16SP	3520 0316 00

Dollies other than standard, see page 219.

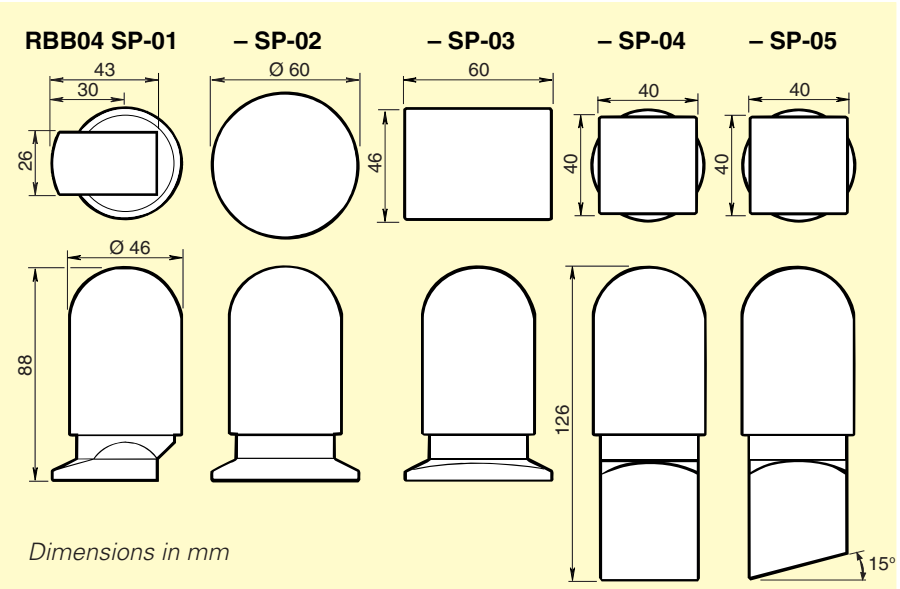

Dollies for RBB10 and RBB16, all models

Dolly type	Weight kg	Weight lb	Ordering No. With rod 5 mm	Weight kg	Weight lb	Ordering No. With rod 50 mm	Weight kg	Weight lb	Ordering No. With rod 100 mm
A	0.37	0.8	3085 0335 93[a]	0.47	1.0	3085 0335 94	0.67	1.5	3085 0335 95
B	0.25	0.55	3085 0363 93	0.35	0.8	3085 0363 94	0.55	1.3	3085 0363 95
C	0.36	0.8	3085 0364 93	0.46	1.0	3085 0364 94	0.66	1.5	3085 0364 95
D	0.43	0.9	3085 0337 93	0.53	1.2	3085 0337 94	0.73	1.6	3085 0337 95
E	0.35	0.8	3085 0339 93	0.45	1.0	3085 0339 94	0.65	1.5	3085 0339 95
F	0.57	1.3	3085 0336 93	0.67	1.5	3085 0336 94	0.87	1.9	3085 0336 95
G	1.00	2.2	3085 0338 93	1.10	2.4	3085 0338 94	1.30	2.9	3085 0338 95
H	0.62	1.4	3085 0340 93	0.72	1.6	3085 0340 94	0.92	2.0	3085 0340 95
J	0.62	1.4	3085 0341 93	0.72	1.6	3085 0341 94	0.92	2.0	3085 0341 95

[a] Standard dolly assy.

Other than Atlas Copco's dollies can also be used and press fitted onto a rod. Please see rod (i.e. hole) specification in the below drawing. Custom design dollies are recommended to be manufactured locally and fitted on to Atlas Copco rods.

DIMENSIONAL DRAWING of dollies available

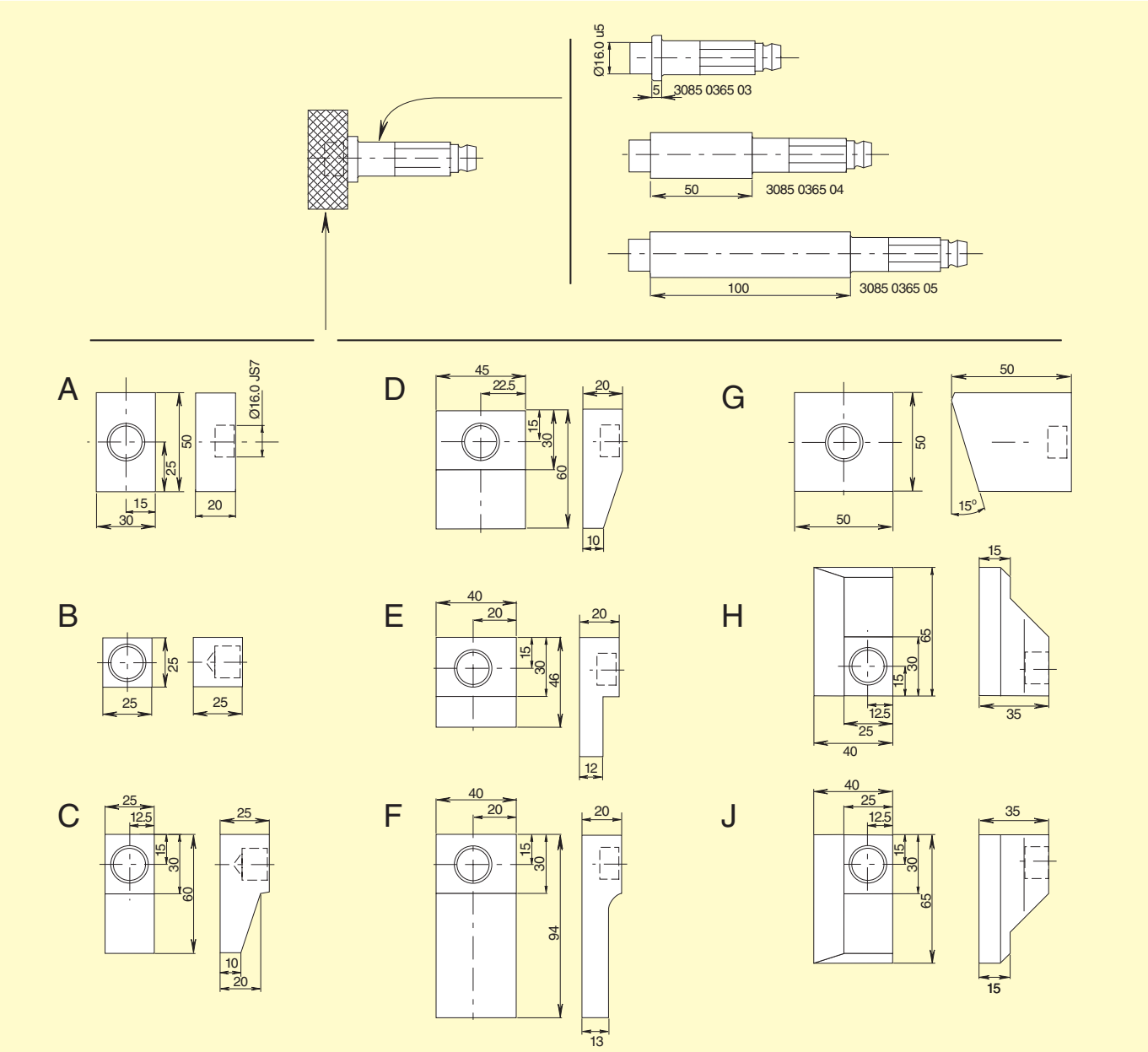

RIVETING HAMMERS

Conventional type

For riveting in confined spaces we recommend our RRN11 riveting hammer.

- **RRN11** – is the smallest riveting hammer available on the market, with unique accessibility.
- **Adjustable** – The RRN11 has a built-in adjustment knob with which you can set the power for different rivet materials and sizes.
- **Controllable** – The trigger is easily operated and provides excellent control.

Model	Blows Hz	Nozzle mm	Nozzle in	Piston dia mm	Piston dia in	Stroke mm	Stroke in	Energy per blow J	Energy per blow ft lb	Weight kg	Weight lb	Air consumption l/s	Air consumption cfm	Hose size mm	Hose size in	Air inlet BSP	Ordering No.
Riveting hammers																	
RRN11P-01	66	10.0	0.4	15	0.6	40	1.6	2.0	1.5	1.2	2.6	3.4	7.2	6.3	1/4	1/8	8426 1101 05*
RRN11P-02	66	10.2	0.4	15	0.6	40	1.6	2.0	1.5	1.2	2.6	3.4	7.2	6.3	1/4	1/8	8426 1101 13*

-01 means 10 mm short shank rivet set.
-02 means 10.2 mm short shank rivet set.

* Available directly from stock.

DIMENSIONS (mm)

Model	L	H	C
RRN11P	100	170	23

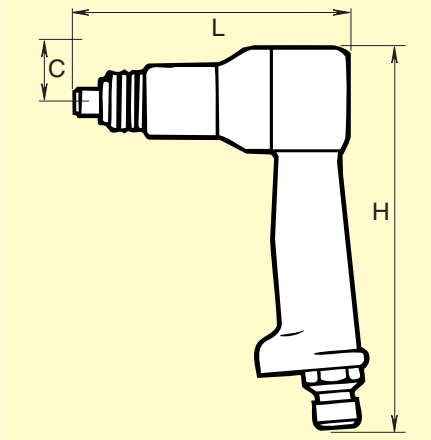

ACCESSORIES INCLUDED

RRN11P

Hose fitting and retainer
Blank rivet set
Retainers for blank and flush rivet set

OPTIONAL ACCESSORIES

Blank and flush rivet sets, see page 217.

CHISELS

Chisels for Chipping Hammers. All chisels are normally through hardened. Otherwise, see tables.

Figure	Shank type	Tools	Table
	Square shank 13.0 mm	RRC13, RRC13B	1
	Extended square shank ISO, 12.7 mm	RRC15	1
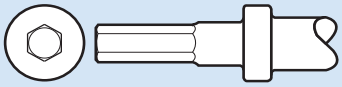	Hexagon and round shank ISO, round collar 12.7 mm	RRC22F-01, RRC22F-02 RRF21, RRF31	2
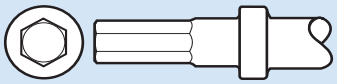	Hexagon shank ISO round collar 17.3 mm	RRC34B-01, RRC65B-01, RRC75B-01	3
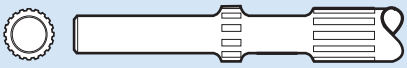	Round shank ISO, with splines 17.3 mm	RRD37, RRD57	3
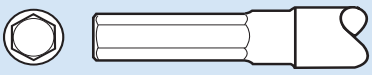	Hexagon shank ISO without round collar 17.3 mm	RRC34-01, RRC65-01, RRC75-01	4
	Round shank ISO, without collar 17.3 mm	RRC34-02, RRC65-02, RRC75-02	4
	Special shank	RVM07B	5

1 A. Chisels with square shank 13.0 mm
B. Chisels with square shank ISO 12.7 mm

Chisel type	Designation	Width mm	Width in	Length mm	Length in	A Square 13 mm (1/2") Ordering No.	B ISO Extended square 12.7 mm (1/2") Ordering No.
	Chisel blank	15	0.59	155	6.1	3085 0020 00	3085 0228 02
		15	0.59	200	7.9	3085 0020 01	
		15	0.59	300	11.8	3085 0020 02	
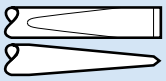	Flat chisel	15	0.59	165	6.1	3085 0227 00	3085 0230 01
		15	0.59	200	7.9	3085 0227 01	
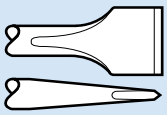	Wide flat chisel	35	1.38	165	6.5	3085 0032 00	3085 0232 01
		35	1.38	200	7.9	3085 0032 01	
		35	1.38	300	11.8	3085 0032 02	
		55	2.17	165	6.5	3085 0332 00	
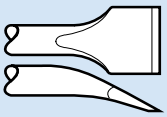	Angle scraper chisel	35	1.38	165	6.5	3085 0176 00	3085 0362 00
		35	1.38	200	7.9	3085 0176 01	
		55	2.17	165	6.5	3085 0333 00	
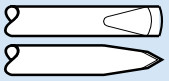	Scaling chisel	15	0.59	155	6.1	3085 0018 00	3085 0229 01
		15	0.59	200	7.9	3085 0018 02	
		15	0.59	300	11.8	3085 0018 01	

2 A. Chisels with hexagon shank ISO, round collar 12.7 mm
B. Chisels with round shank ISO, round collar 12.7 mm

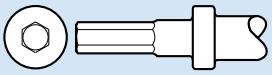

Chisel type	Designation	Width mm	Width in	Length mm	Length in	A Hex ISO 12.7 mm (1/2") Ordering No.	B Round ISO 12.7 mm (1/2") Ordering No.
	Chisel blank	13	0.51	200	7.9	3085 0182 00	
		13	0.51	350	13.8	3085 0182 01	
		13	0.51	400	15.7	3085 0182 04	
		13	0.51	500	19.7	3085 0182 05	
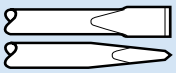	Flat chisel	13	0.51	200	7.9	3085 0183 00	3085 0184 00
		35	1.38	300	11.8	3085 0376 00	
	Sharp chisel	15	0.59	200	7.9	3085 0170 00	
		15	0.59	300	11.8	3085 0170 01	
	Spot weld chisel	17	0.69	200	7.9	3085 0301 00	
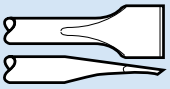	Angle scraper chisel	30	1.18	200	7.9	3085 0262 00	
	Pipe cutting chisel	20	0.78	200	7.9	3085 0302 00	
		35	1.38	200	7.9	3085 0303 00	
	Plate cutting chisel	14.5	0.57	200	7.9	3085 0263 00	
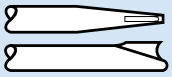	Plate cutting chisel	16	0.62	200	7.9	3085 0173 00	
	Moil point chisel	13	0.51	200	7.9	3085 0297 00	
		13	0.51	305	12.0	3085 0297 01	

3 A. Chisels with hexagon shank ISO, round collar 17.3 mm
B. Chisels with round ISO shank with splines 17.3 mm

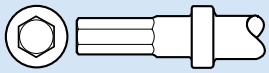
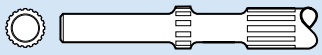

Chisel type	Designation	A Width mm	A Width in	A Length mm	A Length in	A Hex ISO 17.3 mm (0.68") Ordering No.	B Width mm	B Width in	B Length mm	B Length in	B Round ISO with splines 17.3 mm (0.68") Ordering No.
	Chisel blank	22	0.86	335	13.1	3085 0220 00	22	0.86	250	9.8	3085 0242 00
		22	0.86	560	22.0	3085 0220 01	22	0.86	340	13.4	3085 0242 01
		22	0.86	1060	41.7	3085 0220 02	22	0.86	550	21.7	3085 0242 02
							22	0.86	800	31.5	3085 0242 03
							22	0.86	1200	47.2	3085 0242 04
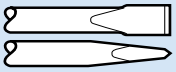	Flat chisel	22	0.86	260	10.2	3085 0221 00	22	0.86	215	8.5	3085 0236 00
		22	0.86	335	13.1	3085 0221 01	22	0.86	250	9.8	3085 0236 01
		22	0.86	560	41.9	3085 0221 02	22	0.86	340	13.4	3085 0236 02
							22	0.86	550	21.7	3085 0236 03
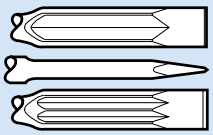	Flat chisel	32	1.26	335	13.1	3085 0989 00	32	1.26	340	13.4	3085 0252 00
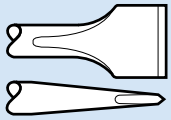	Wide flat chisel	50	1.97	335	13.1	3085 0235 00	50	1.97	340	13.4	3085 0250 00
	Extra wide flat chisel	130	5.12	400	15.7	3085 0342 00	130	5.12	400	15.7	3085 0998 00
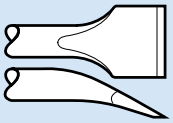	Angle scraper chisel	50	1.97	335	13.1	3085 0349 00	50	1.97	335	13.2	3085 0350 00
	Moil point chisel	22	0.86	335	13.1	3085 0223 00	22	0.86	340	13.4	3085 0249 00
		22	0.86	560	15.7	3085 0223 01					
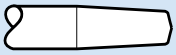	Shank rod for roughing head	–	–	180	7.1	3085 0257 00	–	–	195	7.7	3085 0254 00
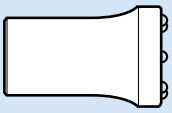	Roughing head for shank rod (tungsten carbide)	39	1.53	–	–	3085 0255 00	39	1.53	–	–	3085 0255 00
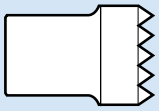	Roughing head for shank rod	40	1.57	–	–	3085 0253 00	40	1.57	–	–	3085 0253 00

4 A. Chisels with ISO shank without collar, round
B. Chisels with ISO shank without collar, hexagon

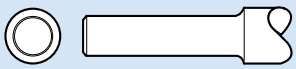
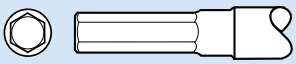

Chisel type	Designation	Width mm	Width in	Length mm	Length in	A Round 17.3 mm (0.68") ISO Ordering No.	B Hexagon 17.3 mm (0.68") ISO Ordering No.
	Chisel blank	23	0.91	200	7.9	3085 0150 00	3085 0140 00
		23	0.91	560	22.0		3085 0140 01
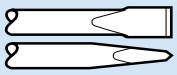	Flat chisel	23	0.91	225	8.9	3085 0225 00	3085 0224 00

5. Chisels with special shank

Chisel type	Designation	Material	Width mm	Width in	Length mm	Length in	Ordering No.
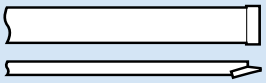	Flat chisel	Tungsten carbide	10	0.39	120	4.7	3085 0321 00
		Through hardened steel	10	0.39	120	4.7	3085 0325 00
		Tungsten carbide	10	0.39	200	7.9	3085 0321 01
		Tungsten carbide	10	0.39	300	11.8	3085 0321 02
		Tungsten carbide	20	0.79	120	4.7	3085 0345 00
		Through hardened steel	20	0.79	120	4.9	3085 0346 00
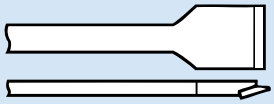	Wide chisel	Tungsten carbide	35	1.38	120	4.7	3085 0322 00
		Through hardened steel	35	1.38	120	4.7	3085 0327 00

RAMMERS

The Atlas Copco dependable and simple floor and bench rammers are intended for ramming of casting sand in cylinders, core boxes, large moulds and casting pits, or for stamping work, for instance with filling sand, and stamping of refractory furnace linings.

Model	Blows Hz	Piston dia mm	Piston dia in	Stroke mm	Stroke in	Length mm	Weight kg	Weight lb	Air consumption l/s	Air consumption cfm	Hose size mm	Hose size in	Air inlet thread BSP	Ordering No.
Rammers														
RAM06	20	20/10	0.8/0.5	84	3.3	415	2.5	5.5	3.0	6.4	6.3	1/4	1/4	8467 0105 29*
RAM12	11	27	1.1	102	4.0	457	4.2	9.3	6.0	12.7	12.5	1/2	1/4	8467 0106 51*
RAM20A	12	34	1.3	203	8.0	1315	10.9	24.0	10.5	22.2	12.5	1/2	special	8467 0108 18*

* Available directly from stock.

DIMENSIONS (mm)

Model	L	D_1	D_2	D_3
RAM06	415	39	48	–
RAM12	480	51	51	–
RAM20A	1315	57	70	32

RAM06/12

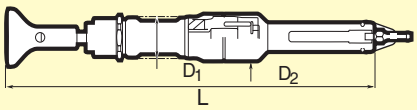

ACCESSORIES INCLUDED

RAM06 Cast iron butt, 60 mm dia, hose nipple

RAM12 Rubber butt, 73 mm dia, hose nipple

RAM20A Cast iron butt, 75 mm dia, hose attachment

RAM20A

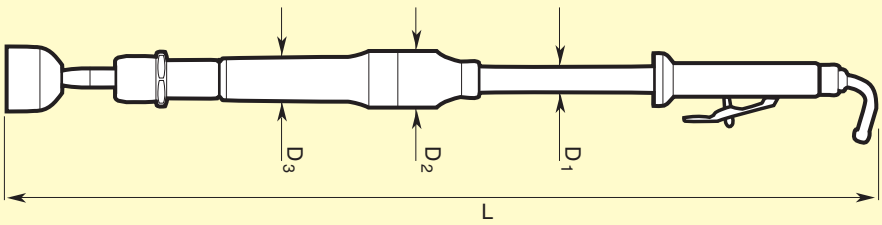

OPTIONAL ACCESSORIES

Model	Ordering No.
RAM06	
Rubber peen, 18x50 mm	3086 0006 00
Rubber peen, 60 mm dia	3086 0009 00
RAM12	
Rubber peen, 19x61 mm	3512 0216 00
RAM20A	
Rubber peen, 75 mm	3086 0013 00

Drills

Pick up any Atlas Copco drill…

It fits snugly in your hand. The anatomic design of the grip keeps the arm and wrist straight, reducing the risk of injury. The perfect balance of the tool enables you to guide it smoothly and easily. The high power-to-weight ratio means maximum stock removal in the shortest possible time. The chuck guard protects fingers, allowing a two-handed grip and comfortable guiding of the drilling operation.

Contents **Page**

Selection guide 226
Pistol grip drills 227
Straight drills 228
Angle drills 231
Micro stop drills 235
Tappers 236
Screw-feed drills 238

DRILLS
Selection guide

The classic wing of the pistol-grip drill was designed more than 40 years ago. Its many ergonomic features still make it outstanding on the market in terms of user benefits.

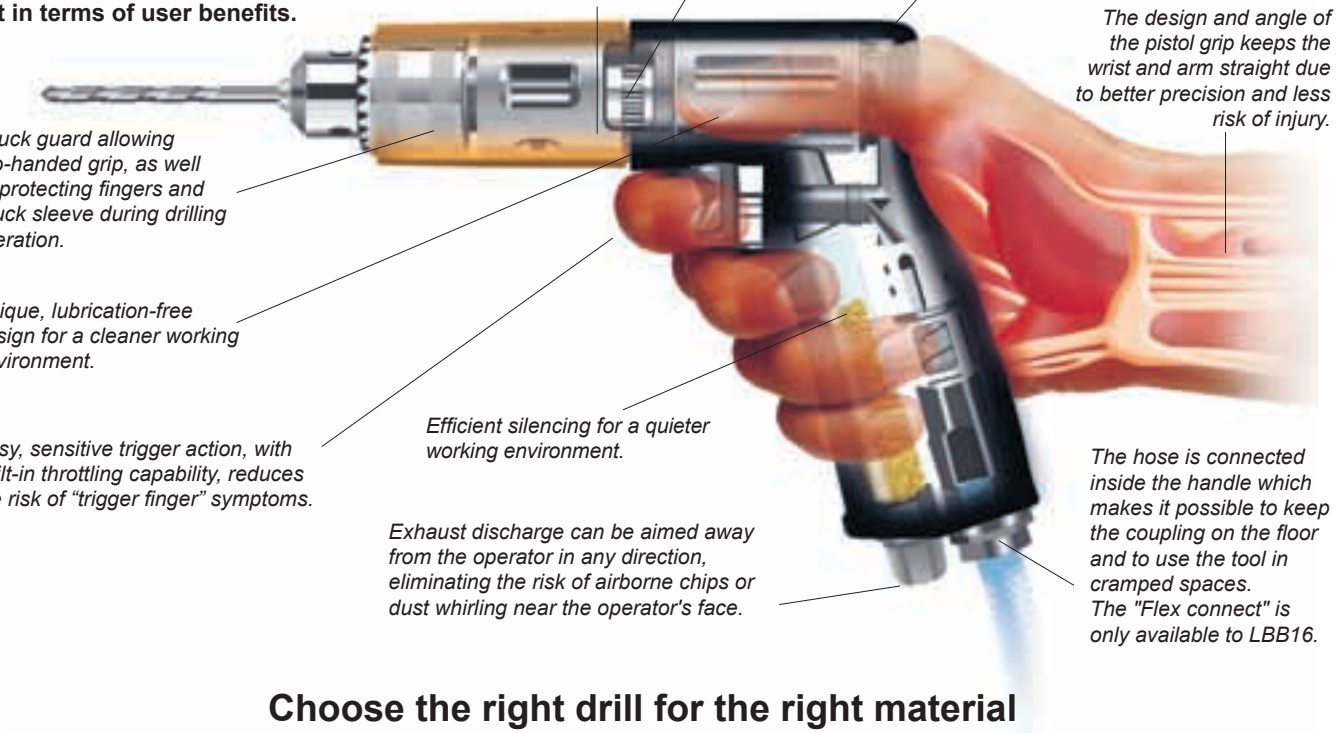

Choose the right drill for the right material

Model		Drill dimension / mm: Titanium	Mild steel 20-30 m/min	Alloy steel 5-15 m/min	Cast iron 15-20 m/min	Aluminium and bronze 50-80 m/min	Wood and board 80-150 m/min	Composite 50-100 m/min
		Material/cutting speed						
LBB16 EP/EPX	200	–	–	–	–	1.0 - 2.0	1.0 - 4.0	1.0 - 4.0
	060	–	–	–	–	1.0 - 5.0	2.0 - 5.0	2.0 - 5.0
	045	–	1.0 - 2.5	–	1.0 - 2.0	2.0 - 8.0[a]	4.0 - 10.0[a]	4.0 - 10.0[a]
	033	–	2.0 - 4.0	1.0 - 1.5	1.5 - 2.5	5.0 - 10.0[a]	5.0 - 12.0[a]	5.0 - 12.0[a]
	024	–	2.5 - 5.0	1.0 - 2.0	2.0 - 4.0	–	–	–
	010	–	6.0 - 8.0	1.5 - 5.0	5.0 - 8.0	–	–	–
	007	3	6.0 - 8.0	1.5 - 5.0	5.0 - 8.0	–	–	–
	005	5	6.0 - 8.0	1.5 - 5.0	5.0 - 8.0	–	–	–
LBB26 EPX	060	–	1.0 - 2.0			2.5 - 5.0	4.0 - 8.0	1.0 - 5.0
	045	–	1.5 - 3.0			4.0 - 8.0	6.0 - 10.0	3.0 - 8.0
	033	–	2.0 - 4.0		1.5 - 3.0	5.0 - 10.0	8.0 - 13.0	5.0 - 10.0
	026	–	2.5 - 6.0	1.0 - 3.0	2.0 - 4.0	8.0 - 13.0	8.0 - 13.0	
	013	–	5.0 - 10.0	1.0 - 5.5	4.0 - 8.0			
	007	3	8.0 - 13.0	3.0 - 8.0	7.0 - 13.0			
	005	5	14 - 19[a]	4.0 -10.0	8.0 - 15.0			
LBB36/37	H060	–	1.0 - 2.0	–	–	2.5 - 5.0	4.0 - 8.0	1.0 - 5.0
	H033	–	2.0 - 4.0	–	1.5 - 3.0	5.0 - 10.0	8.0 - 13.0	5.0 - 10.0
	H026	–	2.5 - 6.0	1.0 - 3.0	2.0 - 4.0	8.0 - 13.0[a]	8.0 - 13.0[a]	8.0 - 13.0[a]
	H013	–	5.0 - 10.0	1.0 - 5.5	4.0 - 8.0	–	–	–
	H007	3	8.0 - 13.0	3.0 - 8.0	7.0 - 13.0	–	–	–
	H005	5	14.0 - 19.0[b]	–	–	–	–	–
LBB45	H017	–	–	–	–	10.0 - 16.0	16.0 - 50.0[a]	10.0 - 16.0
	H006	–	10.0 - 16.0	4.0 -10.0	8.0 - 16.0	16.0 - 23.0[a]	–	16.0 - 23.0[a]
	H004	–	16.0 - 23.0[a]	6.0 -16.0	13.0 - 23.0[a]	–	–	–

[a] This bit size is larger than the standard chuck capacity of the machine.
[b] To be used with No. 2 Morse socket adapter, see Optional Accessories.

DIMENSIONS LBB EP/EPX/H (mm)

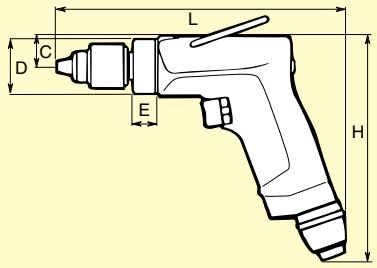

Model	L	H	C	D	E
LBB16 EP/EPX-200	177	131	16.5	31.4	13.8
LBB16 EP/EPX-060	177	131	16.5	31.4	13.8
LBB16 EP/EPX-045	177	131	16.5	31.4	13.8
LBB16 EP/EPX-033	177	131	16.5	31.4	13.8
LBB16 EP/EPX-024	177	131	16.5	31.4	13.8
LBB16 EP/EPX-020	177	131	16.5	31.4	13.8
LBB16 EP/EPX-010	190	131	16.5	31.4	27.0
LBB16 EP/EPX-005	190	131	16.5	31.4	27.0
LBB16 EP-003	190	131	16.5	31.4	27.0
LBB26 EPX-060	180	147	21	39	-
LBB26 EPX-045	180	147	21	39	-
LBB26 EPX-033	180	147	21	39	-

Model	L	H	C	D	E
LBB26 EPX-026	180	147	21	39	-
LBB26 EPX-019	196	147	21	39	-
LBB26 EPX-013	196	147	21	39	-
LBB26 EPX-007	196	147	21	39	-
LBB26 EPX-005	196	147	21	39	-
LBB36/37 H060	217	157	23	41.5	16.5
LBB36/37 H033	217	157	23	41.5	16.5
LBB36/37 H026	217	157	23	41.5	16.5
LBB36/37 H013	256	157	23	41.5	64.0
LBB36/37 H007	256	157	23	41.5	64.0
LBB36/37 H005	256	157	23	41.5	64.0
LBB45 H006	360	185	33	60	113

PISTOL GRIP DRILLS

Atlas Copco pistol-grip drills are suitable for most drilling tasks in virtually every sector of industry.

- Comfortable grip for high precision.
- Cost-saving.
- Two-hand grip available.
- Lubrication-free.

The new LBB16 and LBB26 are the answer to customer demands for:

- Improved ergonomics.
- Increased power.
- Smaller size.

LBB16 EP	***290 W***	***(0.4 hp)[a]***
LBB16 EPX	***340 W***	***(0.45 hp)[a]***
LBB26	***500 W***	***(0.7 hp)[a]***
LBB36	***700 W***	***(0.9 hp)[a]***
LBB37	***820 W***	***(1.1 hp)[a]***
LBB45	***700 W***	***(0.9 hp)[b]***

[a] Lubrication-free motor.
[b] Conventional motor (pistol-grip drill only).

Model	Free speed r/min	Chuck capacity mm	Weight kg	Weight lb	Air consumption at free speed l/s	Air consumption at free speed cfm	Hose size mm	Hose size in	Air inlet thread BSP	Sound level at free speed dB(A)	With chuck Ordering No.	Without chuck Model	Without chuck Ordering No.
Non-reversible drills with air supply through handle													
LBB16 EP-200[a]	20000	6.5	0.6	1.2	8.0	17.0	6.3	1/4	1/4	75	8421 0108 60*	200-U	8421 0108 61
LBB16 EP-060[a]	6000	6.5	0.6	1.2	8.0	17.0	6.3	1/4	1/4	75	8421 0108 50*	060-U	8421 0108 51
LBB16 EP-045[a]	4500	6.5	0.6	1.2	8.0	17.0	6.3	1/4	1/4	75	8421 0108 40*	045-U	8421 0108 41*
LBB16 EP-033[a]	3300	6.5	0.6	1.2	8.0	17.0	6.3	1/4	1/4	75	8421 0108 30*	033-U	8421 0108 31*
LBB16 EP-024[a]	2400	6.5	0.6	1.2	8.0	17.0	6.3	1/4	1/4	75	8421 0108 20*	024-U	8421 0108 21*
LBB16 EP-010	1000	10.0	0.7	1.5	8.0	17.0	6.3	1/4	1/4	75	8421 0108 10*	010-U	8421 0108 11*
LBB16 EP-005[b]	500	10.0	0.7	1.5	8.0	17.0	6.3	1/4	1/4	75	8421 0108 06*	005-U	8421 0108 07*
LBB16 EP-003[b]	300	10.0	0.7	1.5	8.0	17.0	6.3	1/4	1/4	75	8421 0108 01*	003-U	8421 0108 02
LBB16 EPX-200[a]	20000	6.5	0.6	1.2	9.5	20.0	6.3	1/4	1/4	78	8421 0108 82*	200-U	8421 0108 63
LBB16 EPX-060[a]	6000	6.5	0.6	1.2	9.5	20.0	6.3	1/4	1/4	78	8421 0108 52*	060-U	8421 0108 53*
LBB16 EPX-045[a]	4500	6.5	0.6	1.2	9.5	20.0	6.3	1/4	1/4	78	8421 0108 42*	045-U	8421 0108 43*
LBB16 EPX-033[a]	3300	6.5	0.6	1.2	9.5	20.0	6.3	1/4	1/4	78	8421 0108 32*	033-U	8421 0108 33*
LBB16 EPX-024[a]	2400	6.5	0.6	1.2	9.5	20.0	6.3	1/4	1/4	78	8421 0108 22*	024-U	8421 0108 23*
LBB16 EPX-010[b]	1000	10.0	0.7	1.5	9.5	20.0	6.3	1/4	1/4	78	8421 0108 12*	010-U	8421 0108 03*
LBB16 EPX-005[b]	500	10.0	0.7	1.5	9.5	20.0	6.3	1/4	1/4	78	8421 0108 08*	050-U	8421 0108 09*
LBB26 EPX-060[a]	6000	8	0.69	1.5	14.5	31.8	10.0	3/8	1/4	80	8421 0500 14*	060-U	8421 0500 15*
LBB26 EPX-045[a]	4500	8	0.69	1.5	14.5	31.8	10.0	3/8	1/4	80	8421 0500 12*	045-U	8421 0500 13*
LBB26 EPX-033[a]	3300	8	0.69	1.5	14.5	31.8	10.0	3/8	1/4	80	8421 0500 10*	033-U	8421 0500 11*
LBB26 EPX-026[ad]	2600	8	0.79	1.7	14.5	31.8	10.0	3/8	1/4	80	8421 0500 08*	026-U	8421 0500 09*
LBB26 EPX-019[a]	1900	10	0.79	1.7	14.5	31.8	10.0	3/8	1/4	80	8421 0500 24*	026-U	8421 0500 25*
LBB26 EPX-013[ab]	1300	10	0.79	1.7	14.5	31.8	10.0	3/8	1/4	80	8421 0500 06*	013-U	8421 0500 07*
LBB26 EPX-007[b]	700	13	0.82	1.8	14.5	31.8	10.0	3/8	1/4	80	8421 0500 04*	007-U	8421 0500 05*
LBB26 EPX-005[b]	500	13	0.82	1.8	14.5	31.8	10.0	3/8	1/4	80	8421 0500 02*	005-U	8421 0500 03*
LBB26 EPX-003[b]	300	13	0.82	1.8	14.5	31.8	10.0	3/8	1/4	80	8421 0500 00*	003-U	8421 0500 01*
LBB36 H200[a]	20000	6.5	1.0	2.2	16.5	34.9	10.0	3/8	3/8	81	8421 0408 55	-H200U	8421 0408 53
LBB36 H060[a]	6000	6.5	1.2	2.5	16.5	34.9	10.0	3/8	3/8	81	8421 0408 49*	-H060U	8421 0408 47*
LBB36 H033[a]	3300	10.0	1.2	2.5	16.5	34.9	10.0	3/8	3/8	81	8421 0408 41*	-H033U	8421 0408 39*
LBB36 H026[a]	2600	10.0	1.2	2.5	16.5	34.9	10.0	3/8	3/8	81	8421 0408 33*	-H026U	8421 0408 31*
LBB36 H013[a]	1300	10.0	1.5	3.3	16.5	34.9	10.0	3/8	3/8	81	8421 0408 15*	-H013U	8421 0408 13*
LBB36 H007[b]	700	13.0	1.6	3.5	16.5	34.9	10.0	3/8	3/8	81	8421 0408 07*	-H007U	8421 0408 05*
LBB36 H005[b]	500	–	1.2	3.3	16.5	34.9	10.0	3/8	3/8	81	–	-H005U	8421 0408 03*
LBB37 H230	23000	6.5	1.0	2.2	20.5	44.0	10.0	3/8	3/8	83	8421 0608 03	-H230U	8421 0608 18*
LBB37 H065	6500	6.5	1.2	2.5	20.5	44.0	10.0	3/8	3/8	83	8421 0608 11	-H065U	8421 0608 17*
LBB37 H037	3700	10.0	1.2	2.5	20.5	44.0	10.0	3/8	3/8	83	8421 0608 13	-H037U	8421 0608 16*
LBB37 H015	1500	10.0	1.5	3.3	20.5	44.0	10.0	3/8	3/8	83	8421 0608 05	-H015U	8421 0608 15*
LBB37 H006	600	–	1.2	2.5	20.5	44.0	10.0	3/8	3/8	83	–	-H006U	8421 0608 14*
LBB45 H017[b]	1700	16.0	4.2	9.3	10.0	21.0	10.0	3/8	1/4	85[c]	8421 0501 32*	–	–
LBB45 H006[b]	600	16.0	4.3	9.3	10.0	21.0	10.0	3/8	1/4	85[c]	8421 0501 24*	–	–
LBB45 H004[b]	400	16.0	4.3	9.3	10.0	21.0	10.0	3/8	1/4	85[c]	8421 0501 16*	–	–
Reversible drills with drill chuck and quick change 1/4" bit holder													
COMBI22 HR2	3600	6.5	0.9	2.0	7.0	15.0	8.0	5/16	1/4	75	8431 0255 89	–	–
COMBI22 HR5	1600	10.0	0.9	2.0	7.0	15.0	8.0	5/16	1/4	75	8431 0255 80	–	–
COMBI22 HR10	800	10.0	1.1	2.4	7.0	15.0	8.0	5/16	1/4	75	8431 0255 62	–	–
COMBI34 HR16	1600	10.0	1.0	2.2	8.0	17.0	10.0	3/8	1/4	79	8431 0311 36	–	–
COMBI34 HR08	800	10.0	1.3	2.9	8.0	17.0	10.0	3/8	1/4	79	8431 0311 34	–	–
COMBI34 HR04	400	13.0	1.5	3.3	8.0	17.0	10.0	3/8	1/4	79	8431 0311 32	–	–

[a] Including chuck guard.
[b] Including support handle.
[c] 79 dB(A) with silencer set 4112 0863 80.
[d] Also available in explosion proofcertified versions.
* Available directly from stock.

STRAIGHT DRILLS

The straight drills are intended mainly for vertical drilling operations and for drilling in cramped and confined spaces.

- **Quiet** – They have a very low noise level, just like all our drills.
- **Side exhaust** (LBB34) – The air can be directed for operator convenience.
- **Rear exhaust** (LBB24) – The air is piped away through a pliant hose and prevents whirls of dust.
- **Lubrication-free** – 24- and 34-series of drills are lubrication-free for clean working environment and operator comfort.

LBB24 210 W (0.3 hp) Lubrication-free motor
LBB34 400 W (0.6 hp) Lubrication-free motor

Model	Free speed r/min	Chuck capa-city mm	Weight		Air consumption at free speed		Hose size		Air inlet thread BSP	Sound level at free speed dB(A)	With chuck Ordering No.	Without chuck	
			kg	lb	l/s	cfm	mm	in				Model	Ordering No.
Drills with rear exhaust													
LBB24 S200B	19000	6.5	0.8	1.7	6.0	13.0	6.3	1/4	1/4	75	8421 0205 15*	-S200U	8421 0205 56
LBB24 S060B	6000	6.5	0.8	1.7	6.0	13.0	6.3	1/4	1/4	75	8421 0205 17*	-S060U	8421 0205 19*
LBB24 S045B	4500	6.5	0.8	1.7	6.0	13.0	6.3	1/4	1/4	75	8421 0205 23*	-S045U	8421 0205 64*
LBB24 S033B	3300	6.5	0.8	1.7	6.0	13.0	6.3	1/4	1/4	75	8421 0205 31*	-S033U	8421 0205 72*
LBB24 S020B	2000	6.5	0.8	1.7	6.0	13.0	6.3	1/4	1/4	75	8421 0205 49*	-S020U	8421 0205 80
Drills with side exhaust													
LBB34 S060	6000	10.0	1.1	2.4	10.0	21.0	10.0	3/8	1/4	88	8421 0309 41*	-S060U	8421 0309 74*
LBB34 S026	2600	10.0	1.1	2.4	10.0	21.0	10.0	3/8	1/4	88	8421 0309 25*	-S026U	8421 0309 82*
LBB34 S013	1300	10.0	1.5	3.3	10.0	21.0	10.0	3/8	1/4	87	8421 0309 17*	-S013U	8421 0309 90*

24- and 34-models have a 3/8" -24 UNF spindle thread.

* Available directly from stock.

DIMENSIONS LBB S (mm)

Model	L	H	C	D	E
LBB24 S200	183	38	19	35.9	14.8
LBB24 S060	198	38	19	35.9	14.8
LBB24 S045	183	38	19	35.9	14.8
LBB24 S033	183	38	19	35.9	14.8
LBB24 S020	183	38	19	35.9	14.8
LBB34 S060	192	43	21	41.5	16.5
LBB34 S026	192	43	21	41.5	16.5
LBB34 S013	200	43	21	41.5	16.5

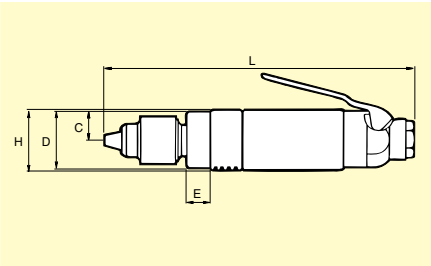

ACCESSORIES INCLUDED

For pistol grip models

Chuck, chuck key, hose nipple.

LBB16 and -36/37 with suspension yoke and with chuck guard where possible.

16, 26 and -36/37-models have a 3/8" -24 UNF spindle thread.

LBB36 H005 and LBB37 H006 has a 1/2" thread

LBB45 has a JT3 taper mount.

For straight models

Chuck, chuck key, hose nipple

Suspension yoke and chuck guard

Push button set

Exhaust hose (-24 models)

Key chuck

OPTIONAL ACCESSORIES

Key chucks

Mount	Body diameter mm	Chuck capacity mm	Ordering No. Chuck (key incl)	Ordering No. Key only	Key designation
3/8-24UNF	30	0.0- 6.5	4021 0283 00	4021 0293 00	S1
3/8-24UNF	30	0.5- 8.0	4021 0495 00	4021 0293 00	S1
3/8-24UNF	36	2.0-10.0	4021 0416 00	4021 0449 00	S8
3/8-24UNF	46	2.0-13.0	4021 0289 00	4021 0465 00	S2
JT3	59	3.0-16.0	4021 0423 00	4021 0301 00	S3

Quick chuck

Quick chucks

Mount	Chuck dia mm	Chuck capacity mm	Ordering No.
3/8-24UNF	34	0.0- 6.5	4021 0400 00
3/8-24UNF	34	0.0- 8.0	4021 0401 00
3/8-24UNF	36	0.0-10.0	4021 0402 00
3/8-24UNF	36	2.0-13.0	4021 0403 00

Support handle

Support handles

For model	Ordering No.
LBB16	4110 1355 92
LBB26	4110 1355 95
LBB36/37	4110 1355 82
LBV34	4110 1355 87
LBB45	4110 1355 84

Chuck guard

Chuck guards

For model	Max chuck dia mm	Ordering No.
LBB16[a]	30	4110 1619 04
LBB26	36	4110 1728 02
LBB26	30	4110 1728 03
LBB36[b]	36	4110 1415 00
LBB37	36	4110 1415 00

[a] The guards do not fit 1000 r/min models, 500 r/min and 300 r/min models.

[b] The guards do not fit 700 r/min models.

Silencer set

Silencer sets

For model		Ordering No.
LBB45	External silencer	4112 0863 80

Collet chuck and collets

Designation	Capacity mm	Capacity in	Ordering No.
Collet	3		4150 0081 00
	6		4150 0075 00
	8	5/16	4150 0074 00
		1/8	4150 0082 00
		5/32	4150 0648 00
		3/16	4150 0649 00
		1/4	4150 0076 00
Collet holder			4110 0844 90
Collet nut			4150 0760 00

Collet chuck and collets

Flex connect

For model	Ordering No.
LBB16	4110 1601 80

Flex connect

Spot suction attachment

For model	Hose size in	Spot suction kit[a] Ordering No.	Hose kit Ordering No.
LBB16	1 1/4	4110 1715 80	4112 1227 00
LBB26	1 1/4	4110 1715 84	4112 1227 00
LBB36/37	1 1/4	4110 1716 80	4112 1227 00

[a] Spare part, nose piece kit, Ordering No. 4110 1700 90.
Other standard sizes of front nozzle available.

Spot suction attachment

Power feed arm for extra feed force – LBB 36 H005 and LBB 37 H006

	Ordering No.
Adapter piece (SR295), lever arm (SR201), chain (SR202) and No. 2 Morse socket (SR206)	4110 1416 80
Two extension pieces (SR204-1 and SR204-2), 370 and 750 mm long	4110 1417 80
No. 2 Morse socket	4110 1416 01

Power feed arm

OPTIONAL ACCESSORIES – LBB45

Designation	Ordering No.
Feed screw	4110 0976 80
No. 2 Morse socket	4130 1080 00
Ratchet wrench for feed screw	4130 2000 00
Breast plate	4110 0974 80
Silencer set	4112 0863 80

SERVICE KITS

LBB16	4081 0271 90
LGB24	4081 0005 90
LBB26	4081 2028 90
LGB/LBV34	4081 0035 90
LBB36/37	4081 0194 90
LBB45	4081 0139 90

ANGLE DRILLS

The perfect drill for cramped spaces
The angle drills are available in versions with 30°, 45°, 90° and 360° angle heads and are designed for drilling in confined and awkward spaces.

Just like other Atlas Copco hand-held drills, they are based on motors from the 16-, 34-, and 36-series.

The angle drills are operated with a lever throttle. The series feature:

- **Low noise level.**
- **Low air consumption.**
- **Side exhaust/rear exhaust.**
- **Lubrication-free design.**
- **Collet chuck or threaded spindle.**
- **Multiple lever options.**

LBV11	*110 W (0.16 hp)*
LBV16	*300 W (0.4 hp)*
LBV34	*400 W (0.6 hp)*
LBV36 -30,-90/92,-91/93	*510 W (0.73 hp)*

30-type

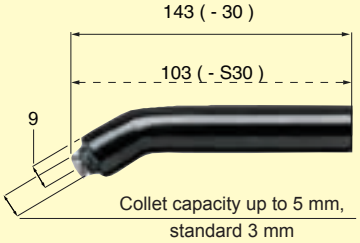

32-type

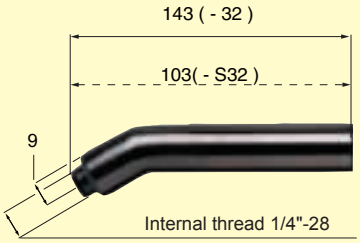

90-type

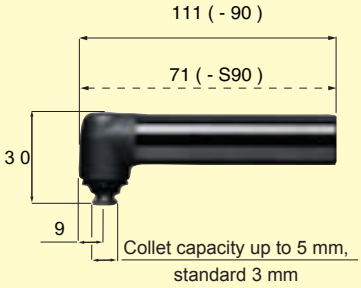

92-type

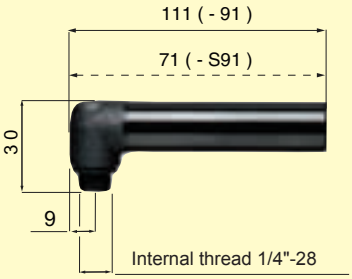

90Z-type

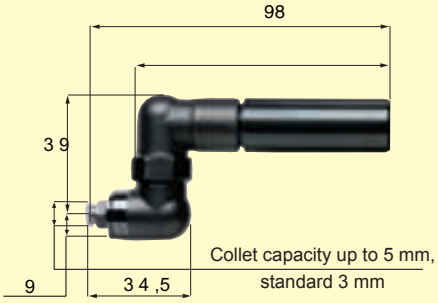

92Z-type

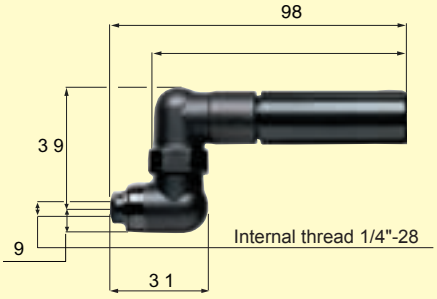

91-type

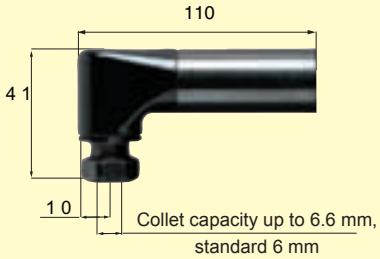

93-type

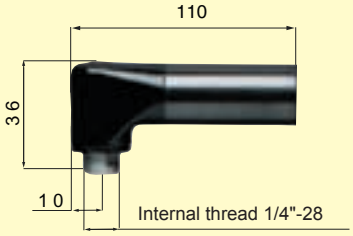

ANGLE DRILLS

Model	Free speed r/min	Setting range rpm	Collet or chuck capacity mm	Weight kg	Weight lb	Air consumption at free speed l/s	Air consumption at free speed cfm	Hose dimension mm	Hose dimension in	Air inlet thread BSP	Sound level at free speed dB(A)	Ordering No.	With spindle lock Ordering No.
30° angle head													
LBV11 S027-S30	2700	–	5.0	0.5	1.1	3.2	6.8	5.0	1/8	1/4	73	8421 0108 70	–
LBV16 032-S30	3200	1500-3200	5.0	0.45	1.0	8.7	18.4	6.3	1/4	1/4	74	8421 0110 04*	8421 0110 29*
LBV16 032-30	3200	1500-3200	5.0	0.5	1.1	8.7	18.4	6.3	1/4	1/4	74	8421 0110 05*	8421 0110 30*
LBV16 032-S32	3200	1500-3200	[c]	0.45	1.0	8.7	18.4	6.3	1/4	1/4	74	8421 0110 06*	8421 0110 31*
LBV16 032-32	3200	1500-3200	[c]	0.5	1.1	8.7	18.4	6.3	1/4	1/4	74	8421 0110 07*	8421 0110 32*
LBV36 S030-30[d]	3000	–	5.0	1.0	2.2	17.0	36.0	10.0	3/8	1/4	82	8421 0414 70	–
LBV36 S030-S30[d]	3000	–	5.0	0.9	2.0	17.0	36.0	10.0	3/8	1/4	82	8421 0414 71	–
LBV36 S045-30[d]	4500	–	5.0	1.0	2.2	17.0	36.0	10.0	3/8	1/4	82	8421 0414 72*	–
LBV16 045-32	4500	3200-4500	5.0	0.5	1.1	8.7	18.4	6.3	1/4	1/4	74	–	8421 0110 57*
45° angle head													
LBV16 032-45	3200	1500-3200	5.0	0.5	1.1	8.7	18.4	6.3	1/4	1/4	74	8421 0110 59	–
LBV16 032-46	3200	1500-3200	[c]	0.5	1.1	8.7	18.4	6.3	1/4	1/4	74	8421 0110 60	–
90° angle head													
LBV11 S025-S90	2500	–	5.0	0.5	1.1	3.2	6.8	5.0	1/8	1/4	73	8421 0109 79*	–
LBV16 032-90	3200	1500-3200	5.0	0.5	1.1	8.7	18.4	6.3	1/4	1/4	74	8421 0110 00*	8421 0110 25*
LBV16 032-S90	3200	1500-3200	5.0	0.45	1.0	8.7	18.4	6.3	1/4	1/4	74	8421 0110 01*	8421 0110 26*
LBV16 032-S92	3200	1500-3200	[c]	0.45	1.0	8.7	18.4	6.3	1/4	1/4	74	8421 0110 02*	8421 0110 27*
LBV16 032-92	3200	1500-3200	[c]	0.5	1.1	8.7	18.4	6.3	1/4	1/4	74	8421 0110 03*	8421 0110 28*
LBV16 045-90	4500	3200-4500	5.0	0.5	1.1	8.7	18.4	6.3	1/4	1/4	74	8421 0110 20*	8421 0110 44*
LBV16 045-92	4500	3200-4500	[c]	0.5	1.1	8.7	18.4	6.3	1/4	1/4	74	8421 0110 21*	8421 0110 45*
LBV16 055-90	5500	4500-5500	5.0	0.5	1.1	8.7	18.4	6.3	1/4	1/4	74	8421 0110 23*	8421 0110 46*
LBV16 055-92	5500	4500-5500	[c]	0.5	1.1	8.7	18.4	6.3	1/4	1/4	74	8421 0110 24*	8421 0110 47*
LBV16 055-S92	5500	4500-5500	[c]	0.45	1.0	8.7	18.4	6.3	1/4	1/4	74	8421 0110 58*	–
LBV36 S030-90[d]	3000	–	5.0	1.0	2.2	17.0	36.0	10.0	3/8	1/4	82	8421 0414 60*	–
LBV36 S030-S90[d]	3000	–	5.0	0.9	2.0	17.0	36.0	10.0	3/8	1/4	82	8421 0414 61	–
LBV36 S045-90[d]	4500	–	5.0	1.0	2.2	17.0	36.0	10.0	3/8	1/4	82	8421 0414 62*	–
LBV36 S045-S90[d]	4500	–	5.0	0.9	2.0	17.0	36.0	10.0	3/8	1/4	82	8421 0414 63	–
LBV36 S030-92[d]	3000	–	[c]	1.0	2.2	17.0	36.0	10.0	3/8	1/4	82	8421 0414 64	–
LBV36 S030-S92[d]	3000	–	[c]	0.9	2.0	17.0	36.0	10.0	3/8	1/4	82	8421 0414 65	–
LBV36 S045-92[d]	4500	–	[c]	1.0	2.2	17.0	36.0	10.0	3/8	1/4	82	8421 0414 66	–
360° angle head													
LBV16 032-90Z	3200	1500-3200	5.0	0.5	1.1	8.7	18.4	6.3	1/4	1/4	74	8421 0110 64	8421 0110 65
LBV16 032-92Z	3200	1500-3200	[c]	0.5	1.1	8.7	18.4	6.3	1/4	1/4	74	8421 0110 68	8421 0110 69
90° angle head – large angle head													
LBV16 045-91	4500	3200-4500	6.6	0.55	1.2	8.7	18.4	6.3	1/4	1/4	74	8421 0110 38*	–
LBV16 032-91	3200	1500-3200	6.6	0.55	1.2	8.7	18.4	6.3	1/4	1/4	74	8421 0110 09*	8421 0110 34*
LBV16 032-93	3200	1500-3200	[c]	0.55	1.2	8.7	18.4	6.3	1/4	1/4	74	8421 0110 10*	8421 0110 35*
LBV16 032-S93	3200	1500-3200	[c]	0.45	1.2	8.7	18.4	6.3	1/4	1/4	74	8421 0110 39*	–
LBV16 010-91	1000	500-1000	6.6	0.6	1.2	8.7	18.4	6.3	1/4	1/4	74	8421 0110 16*	8421 0110 40*
LBV16 010-93	1000	500-1000	[c]	0.6	1.2	8.7	18.4	6.3	1/4	1/4	74	8421 0110 17*	8421 0110 41*
LBV16 018-91	1800	800-1800	6.6	0.55	1.2	8.7	18.4	6.3	1/4	1/4	74	8421 0110 18*	8421 0110 42*
LBV16 018-93	1800	800-1800	[c]	0.55	1.2	8.7	18.4	6.3	1/4	1/4	74	8421 0110 19*	8421 0110 43*
LBV16 005-91	500	200-500	6.6	0.6	1.2	8.7	18.4	6.3	1/4	1/4	74	8421 0110 11*	8421 0110 36*
LBV16 005-93	500	200-500	[c]	0.6	1.2	8.7	18.4	6.3	1/4	1/4	74	8421 0110 12*	8421 0110 37*
LBV36 S030-91[d]	3000	–	6.6	1.0	2.2	17.0	36.0	10.0	3/8	1/4	82	8421 0414 50*	–
LBV36 S060-91[d]	6000	–	6.6	1.0	2.2	17.0	36.0	10.0	3/8	1/4	82	8421 0414 51*	–
LBV36 S030-93[d]	3000	–	[c]	1.0	2.2	17.0	36.0	10.0	3/8	1/4	82	8421 0414 52	–
LBV36 S060-93[d]	6000	–	[c]	1.0	2.2	17.0	36.0	10.0	3/8	1/4	82	8421 0414 53	–
90° angle head – Key chuck models													
LBV16 018-11	1800	800-1800	6.5[a]	0.8	1.7	8.7	18.4	6.3	1/4	1/4	74	8421 0110 22*	–
LBV34 S040[b]	4000	–	6.5[a]	1.5	3.3	7.5	15.9	10.0	3/8	1/4	88	8421 0309 46*	–
LBV34 S010[b]	1000	–	10.0[a]	2.0	4.4	7.5	15.9	10.0	3/8	1/4	88	8421 0309 12*	–
LBV34 S005[b]	500	–	13.0[a]	2.1	4.6	7.5	15.9	10.0	3/8	1/4	87	8421 0309 04*	–

[a] Spindle thread, male 3/8"-24 UNF.
[b] Side exhaust.
[c] Internal thread 1/4"-28.
[d] Short lever as standard.

* Available directly from stock.

ACCESSORIES INCLUDED

Collet or chuck with key
Push button set
Hose nipple
3 mm collet (5.0 collet capacity head)
6 mm collet (6.6 collet capacity head)

OPTIONAL ACCESSORIES

Page 233-234

Angle drill dimensions – Drilling capacity

Model	Angle head mm A	B	C	L	H	Drilling capacity mm Mild steel	Aluminum and bronze
LBV11 S027-S30	59	25	18	224	30	4.0	5.0
LBV11 S025-S90	44	30	18	204	30	4.0	5.0
LBV16 032-S30	103	25	17	241	42	4.0	5.0
LBV16 032-30	143	25	17	281	42	4.0	5.0
LBV16 032-S32	103	25	17	241	42	4.0	5.0
LBV16 032-32	143	25	17	281	42	4.0	5.0
LBV16 032-90	111	30	17	248	42	4.0	5.0
LBV16 032-S90	71	30	17	209	42	4.0	5.0
LBV16 032-S92	71	30	17	209	42	4.0	5.0
LBV16 032-92	111	30	17	249	42	4.0	5.0
LBV16 032-90Z	145	48	17	283	42	4.0	5.0
LBV16 032-91	110	39	20	248	42	4.0	6.6
LBV16 032-93	110	36	20	248	42	4.0	6.6
LBV16 005-91	110	39	20	248	42	6.6	6.6
LBV16 005-93	110	36	20	248	42	6.6	6.6
LBV16 010-91	110	39	20	248	42	5.0	6.6
LBV16 010-93	110	36	20	248	42	5.0	6.6
LBV16 018-91	110	39	20	248	42	6.6	6.6
LBV16 018-93	110	36	20	248	42	6.6	6.6
LBV34 S045	92	97	20	255	43	3.0	6.5
LBV34 S010	92	114	20	290	43	10.0	10.0
LBV34 S005	92	120	20	290	43	13.0	13.0
LBV36 S030-91	92	41	10	252	43	4.0	6.6
LBV36 S060-91	92	41	10	252	43	2.0	6.6
LBV36 S030-93	92	36	10	252	43	4.0	6.6
LBV36 S060-93	92	36	10	252	43	2.0	6.6
LBV36 S030-30	122	26	9	281	43	4.0	5.0
LBV36 S030S-30	82	26	9	241	43	4.0	5.0
LBV36 S045-30	122	26	9	281	43	3.0	5.0
LBV36 S045S-30	82	26	9	241	43	3.0	5.0
LBV36 S030-90	112	30	9	272	43	4.0	5.0
LBV36 S030S-90	72	30	9	232	43	4.0	5.0
LBV36 S045-90	112	30	9	272	43	3.0	5.0
LBV36 S045S-90	72	30	9	232	43	3.0	5.0
LBV36 S030-92	112	30	9	272	43	4.0	5.0
LBV36 S030S-92	72	30	9	232	43	4.0	5.0

Angle head dimensions

LBV11, -16, -36
30°

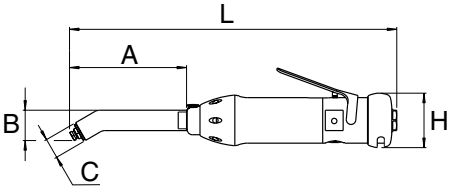

LBV11, -16, -36
90°

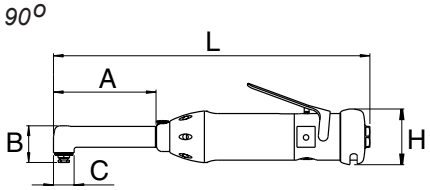

LBV16, -25
360°

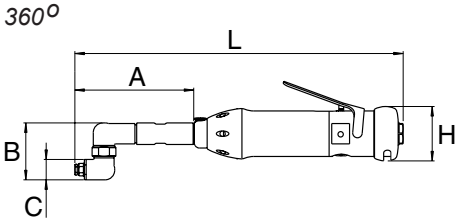

LBV34
90°

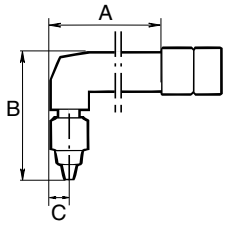

Collets for 5.0 mm capacity head LBV11, LBV16 – (-30, -90, -90Z) and LBV36 (-30, -90)

Capacity mm	Ordering No.	Capacity mm	Ordering No.	Capacity in	Ordering No.
1.0	4110 0438 01	3.4	4110 0438 33	1/16	4110 0438 19
1.5	4110 0438 02	3.5	4110 0438 13	3/32	4110 0438 20
1.8	4110 0438 28	3.6	4110 0438 24	1/8	4110 0438 21
2.0	4110 0438 03	3.7	4110 0438 34	5/32	4110 0438 22
2.1	4110 0438 29	3.8	4110 0438 14	3/16	4110 0438 23
2.2	4110 0438 04	3.9	4110 0438 35		
2.3	4110 0438 30	4.0	4110 0438 15		
2.4	4110 0438 05	4.1	4110 0438 25		
2.5	4110 0438 06	4.2	4110 0438 26		
2.6	4110 0438 07	4.3	4110 0438 36		
2.7	4110 0438 31	4.4	4110 0438 37		
2.8	4110 0438 32	4.5	4110 0438 16		
2.9	4110 0438 08	4.6	4110 0438 38		
3.0	4110 0438 09	4.7	4110 0438 39		
3.1	4110 0438 10	4.8	4110 0438 18		
3.2	4110 0438 11	4.9	4110 0438 40		
3.3	4110 0438 12	5.0	4110 0438 27		

Collets for 5.0 mm (Thread BSF 9/32 -40)

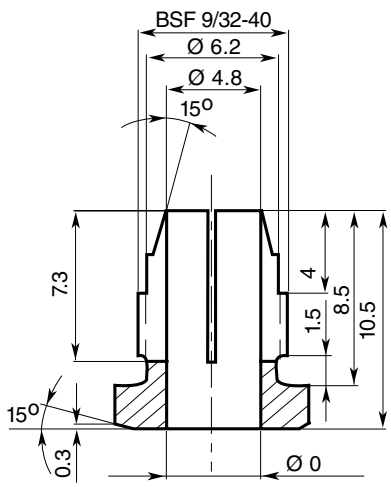

Collets for 6.6 mm capacity head LBV16 (-91) and LBV36 (-91)

Capacity mm	Ordering No.	Capacity mm	Ordering No.
1.6	4110 1411 01	4.2	4110 1411 14
1.8	4110 1411 02	4.4	4110 1411 15
2.0	4110 1411 03	4.6	4110 1411 16
2.2	4110 1411 04	4.8	4110 1411 17
2.4	4110 1411 05	5.0	4110 1411 18
2.6	4110 1411 06	5.2	4110 1411 19
2.8	4110 1411 07	5.4	4110 1411 20
3.0	4110 1411 08	5.6	4110 1411 21
3.2	4110 1411 09	5.8	4110 1411 22
3.4	4110 1411 10	6.0	4110 1411 23
3.6	4110 1411 11	6.2	4110 1411 24
3.8	4110 1411 12	6.4	4110 1411 25
4.0	4110 1411 13	6.6	4110 1411 26

Collet nut 4110 1410 00, to be ordered separately.

Collets for 6.6 mm

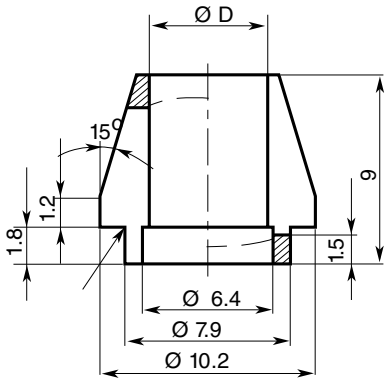

Push button set

For model	Ordering No.
LBV16	4110 1679 90
LBB24 S	4110 1427 90
LBB34 S	4110 1427 91
LBV34 S	4110 1427 91

Push button set

Safety levers

For model		Ordering No.
LBV16		4110 1681 90
LBB24 S	Rear exhaust	4210 2306 80
LBB34 S		4150 1035 90
LBV34 S		4150 1035 90
LBV36		4150 1594 97

Safety lever

Short levers

For model	Ordering No.
LBV16	4210 2306 04
LBV36	4110 1581 01

Short lever

SERVICE KITS

LBV16	4081 0322 90
LBB/LGB/LBV24	4081 0005 90
LBV25	4081 0272 90
LGB/LBV34	4081 0035 90
LBV36 (30, 90/92)	4081 0263 90
LBV36 (91/93)	4081 0251 90

MICRO STOP DRILLS

With integrated micro stop for higher accuracy

The LBS24 drill is equipped with an integrated micro stop intended for the aerospace industry where high precision drilling, reaming and countersinking is important.

- **Accurate** – The integrated micro stop function makes the LBS24 unique for high precision drilling of rivet holes and other fasteners. Minimized spindle run out is induced by eliminating standard drill chuck.
- **Ergonomic** – The handle is from our well-known range of ergonomic drills. The integrated micro stop function makes the tool shorter and lighter in weight.
- **Flexible** – Can be used for drilling, reaming, countersinking and in certain applications a combined operation using a form bit.
- **Dust extraction** – A specially designed spot suction is developed for working in composite.

- **Lubrication-free** – For clean working environment and operator comfort.

Model	Free speed r/min	Spindle thread in/mm	Stroke mm	Stroke in	Setting range ± mm	Setting range ± in	Weight kg	Weight lb	Hose size mm	Hose size in	Air consumption l/s	Air consumption cfm	Sound level dB(A)	Air inlet thread BSP	Ordering No.
LBS24 H045-40M	4500	M6x1	40	1.6	6	1/4	1.1	2.4	6.3	1/4	5.9	12.5	74	1/4	8421 0220 10
LBS24 H045-40	4500	1/4"-28	40	1.6	6	1/4	1.1	2.4	6.3	1/4	5.9	12.5	74	1/4	8421 0220 30
LBS24 H010-40M	1000	M6x1	40	1.6	6	1/4	1.2	2.8	6.3	1/4	5.9	12.5	73	1/4	8421 0220 50
LBS24 H010-40	1000	1/4"-28	40	1.6	6	1/4	1.2	2.8	6.3	1/4	5.9	12.5	73	1/4	8421 0220 70
LBS36 H033-40	3300	1/4"-28	40	1.6	6	1/4	1.2	2.6	10	3/8	16.5	34.9	81	3/8	8421 0220 80
LBS36 H013-40	1300	1/4"-28	40	1.6	6	1/4	1.5	3.3	10	3/8	16.5	34.9	81	3/8	8421 0220 90

DIMENSIONS LBS H (mm)

Model	L	H	C
LBS24 H045-40M	247	154	20
LBS24 H045-40	247	154	20
LBS24 H010-40M	278	154	20
LBS24 H010-40	278	154	20
LBS36 H033-40	281	157	21
LBS36 H013-40	314	157	21

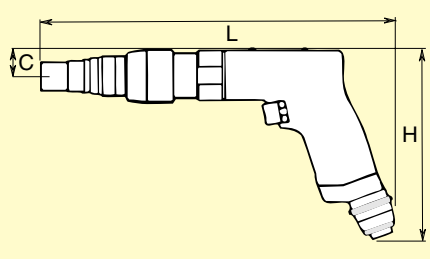

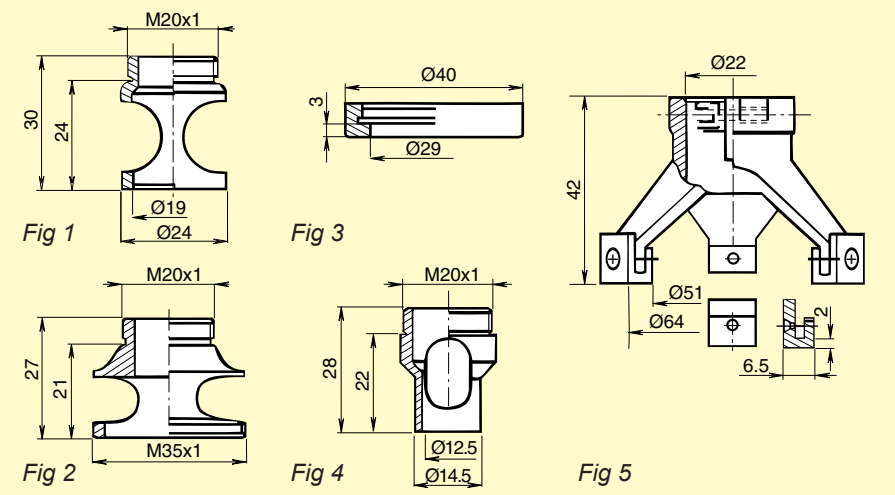

ACCESSORIES INCLUDED

Hose nipple

2x2 mm Allen wrenches

SERVICE KIT

4081 0005 90

OPTIONAL ACCESSORIES

Designation		Attachment	Ordering No.
Plain base, dia 24 mm	Fig 1	M 20x1	4110 1521 00
Plain base for nylon ring (attached with thread M35x1)	Fig 2	M 20x1	4110 1522 00
Separate nylon ring for above base, outer dia 40 mm, thread M35x1	Fig 3	M 20x1	4110 1523 00
Plain base, dia 14.5 mm	Fig 4	M 20x1	4110 1520 00
Tripod, nylon supported	Fig 5	Dia 22 mm	4110 1524 00
Spot suction attachment for drilling in composite, to be used in combination with plain base, dia 24 mm	See photo above		4110 1529 90

TAPPERS

Atlas Copco tappers are designed for tapping and thread cleaning operations with thread taps. As standard, the tools are fitted with a tap chuck.

- **Comfortable and effective** – The ergonomic design of the handle gives you a comfortable grip and maximum performance.
- **Higher productivity** – Thanks to the double speed when you withdraw the machine.
- **Low noise level** – Rearward-directed exhaust gives a lower noise level.
- **Lubrication-free.**
- **Quick change system** – Equip your old tool or order a new one with this system. Various tap holders can be used to change a broken tap or to change to a different tap size.
- **Lower cost** – The efficient air motor together with interchangeable components from our standard drills cut your costs.

Model	Free speed Forward r/min	Free speed Reverse r/min	Tapping capacity mm	Weight kg	Weight lb	Hose dimension mm	Hose dimension in	Air inlet thread BSP	Air consumption l/s	Air consumption cfm	With chuck Ordering No.	Without chuck Model	Without chuck Ordering No.
Pistol-grip tappers with air supply through handle													
LGB24 H007	700	1400	6	1.1	2.4	6.3	1/4	1/4	5.5	11.5	8421 0210 67*	-U	8421 0210 69
LGB24 H007Q[a]	700	1400	6	1.1	2.4	6.3	1/4	1/4	5.5	11.5	8421 0210 75*	–	–
LGB34 H007	700	1400	10	1.8	4.0	10.0	3/8	1/4	7.5	15.9	8421 0311 66*	-U	8421 0311 68*
LGB34 H007Q[a]	700	1400	10	1.8	4.0	10.0	3/8	1/4	7.5	15.9	8421 0311 76*	–	–
LGB36 H007Q[a]	700	1400	12	2.0	4.4	10.0	3/8	3/8	16.5	34.9	8421 0411 00*	–	–
Pistol-grip tappers with air supply on top													
LGB24 HF007Q[a]	700	1400	10	1.2	2.6	6.3	1/4	1/4	6.0	12.7	8421 0210 82	–	–
Straight tappers													
LGB24 S007	700	1400	6	1.1	2.4	6.3	1/4	1/4	5.5	11.6	8421 0210 71	-U	8421 0210 73
LGB34 S007	700	1400	10	1.8	4.0	10.0	3/8	1/4	7.5	15.9	8421 0311 72	-U	8421 0311 74

[a] Quick change system.
Taper: Jacob 1

* Available directly from stock.

DIMENSIONS LGB (mm)

Model	L	H	C
LGB24 H007	260	154	18
LGB34 H007	300	156	20
LGB24 HF007	235	200	20
LGB24 S007	253	38	19
LGB34 S007	293	43	21
LGB36 H007	335	157	20

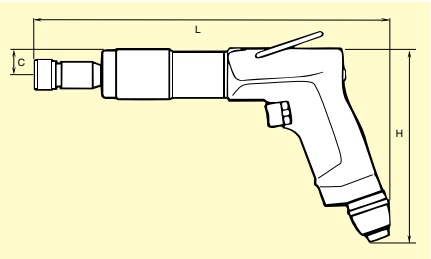

ACCESSORIES INCLUDED

Non Quick change system

LGB24 Chuck complete with collet
4.5-6.5 mm 4021 0410 00

LGB34 Chuck complete with collet
6.4-10 mm 4021 0469 00

Quick change system

Chuck plus one tap holder with collet for M6 shank Ø 6.3 mm.

TAPPERS
Optional accessories

Collets for non Quick change system

Model	Capacity mm	Ordering No.
LGB24	2.5- 4.5	4021 0412 00
	4.5- 6.5	4021 0413 00
LGB34	3.5- 6.5	4021 0337 00
	4.5- 8.0	4021 0336 00
	6.4-10.0	4021 0456 00

Collets for Quick change system

Collets for tap size mm	Shank dia mm	Ordering No.
M2.2/M2.5	2.8	4021 0414 01
M3	3.15	4021 0414 02
M3.5	3.5	4021 0414 03
M4	4.0	4021 0414 04
M4.5	4.5	4021 0414 05
M5	5.0	4021 0414 06
M5.5	5.6	4021 0414 07
M6	6.3	4021 0414 08
M6 (DIN)	6.0	4021 0414 13
M7	7.1	4021 0414 09
M8/M11	8.0	4021 0414 10
M9/M12	9.0	4021 0414 11
M10	10.0	4021 0414 12

SERVICE KITS

LGB24	4081 0005 90
LGB34	4081 0035 90
LGB36	4081 0194 90

Completing existing equipment with Quick change system

Accessories	Length mm	Ordering No.
Quick change chuck	47	4021 0406 90
Tap holder	58	4021 0408 00

SCREW-FEED DRILLS

Atlas Copco screw-feed drills are ideal for heavy-duty drilling operations requiring high feed forces. You can also use these drills for reaming and tube-rolling.

- **Reliable** – They have a simple and reliable design.
- **Constant speed** – The speed governor keeps the drilling speed constant and reduces air consumption as power is reduced.
- **Safer** – The safety catch prevents accidental starting. The throttle is also self-closing.

Model	Forward	Reverse
RAB9	*0.85 kW (1.14 hp)*	*0.55 kW (0.74 hp)*
RAB12	*1.5 kW (2.0 hp)*	*1.1 kW (1.5 hp)*

Model	Free speed r/min	Capacity: Drilling mm	Capacity: Reaming mm	Capacity: Tapping mm	Morse taper No.	Length feed mm	Height mm	Height in	Weight kg	Weight lb	Hose dimension mm	Hose dimension in	Air consumption max output l/s	Air consumption max output cfm	Distance centre to side mm	Air inlet thread BSP	Ordering No.
Reversible screw-feed drills																	
RAB9 VR006	600	23	23	12	2	75	265	10.4	9.5	20.9	13	1/2	23	49	40	1/2	8421 5109 45*
RAB9 VR003	300	23	23	16	2	75	265	10.4	9.5	20.9	13	1/2	22	47	40	1/2	8421 5109 37*
RAB12 L450	475	32	32	24	3	90	340	13.4	12.9	28.4	16	5/8	32	68	50	1/2	8421 5112 24*
RAB12 L250	240	51	40	30	4	90	385	13.2	14.9	32.8	16	5/8	33	70	50	1/2	8421 5112 16*
RAB12 L150	140	51	40	32	4	90	385	15.2	14.9	32.8	16	5/8	30	64	50	1/2	8421 5112 08*

* Available directly from stock.

ACCESSORIES INCLUDED

Hose nipple

OPTIONAL ACCESSORIES

Breast plate

Square drive adapter

Model	Ordering No.
RAB9	4110 0974 82
RAB12	4110 0974 83

Morse taper No.	Square drive in	Ordering No.
3	1	4021 0394 00
4	1	4021 0395 00

Automatic drilling and tapping units

More mechanization in your drilling operations

Simple, cost effective. Atlas Copco automatic drilling and tapping units cut costs by reducing machining time in ancillary equipment, or in highly automated special machines. Modular designs allow the units to be easily replaced, transferred to other machines, or combined to form new special-purpose machines.

Contents **Page**

Automatic drilling and tapping units.....240

Dimension sketches 244-246

AUTOMATIC DRILLING AND TAPPING UNITS

These units are available in three sizes, LBL25, LBL35 and LBL45, each size covering a specific diameter range, totally up to 20 mm in steel.

The basic units can be fitted with different chucks, twin heads for simultaneous drilling of two holes and attachments for chip removal and tapping.

- **Highly dependable** – LBL drilling and tapping units feature quick and precise clamping, making them highly dependable.
- **Easy to build together** – Several holes can be drilled in a single operation since several of these compact units can easily be built together.
- **Low noise level** – The units have a low noise level as the exhaust air is discharged through silencers inside the protective casing.

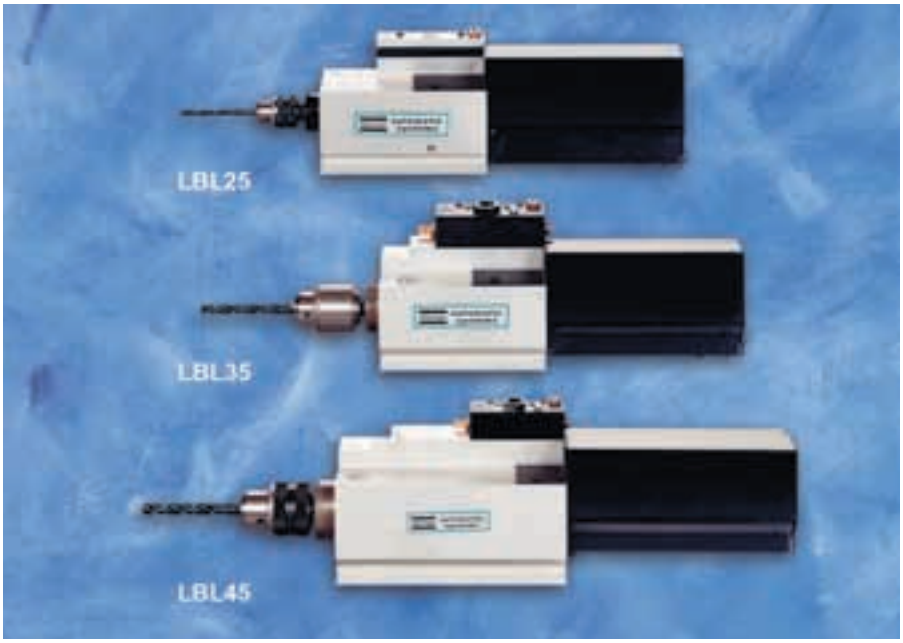

Model	Capacity Steel mm	Capacity Aluminium mm	Feed force N	Max output kW	Max output hp	Feed stroke mm	Free speed r/min	Weight kg	Weight lb	Air consumption Max output l/s	Air consumption Max output cfm	Air consumption Free speed l/s	Air consumption Free speed cfm	Ordering No.
Automatic drilling and tapping units														
LBL25E 220	1.2	2.0	350	0.22	0.3	80	21000	3	6.6	5.2	11	5.8	12	8421 9208 47
LBL25E 049	3.2	5.0	350	0.22	0.3	80	4600	3	6.6	5.2	11	5.8	12	8421 9208 55*
LBL25E 022	5.0	6.5	350	0.22	0.3	80	2100	3	6.6	5.2	11	5.8	12	8421 9208 63*
LBL25E 011	8.0	10.0	350	0.22	0.3	80	1100	3	6.6	5.2	11	5.8	12	8421 9208 71*
LBL35E 190	–	2.0	1050	0.33	0.5	80	19000	7	15.0	9.5	21	10.6	22	8421 9308 53
LBL35E 054	3.0	5.0	1050	0.33	0.5	80	5400	7	15.0	9.5	21	10.6	22	8421 9308 46*
LBL35E 030	5.0	7.0	1050	0.33	0.5	80	3000	7	15.0	9.5	21	10.6	22	8421 9308 38*
LBL35E 014	8.0[a]	10.0[b]	1050	0.33	0.5	80	1400	7	15.0	9.5	21	10.6	22	8421 9308 12*
LBL35E 007	11.0[c]	13.0[d]	1050	0.33	0.5	80	700	16	15.0	9.5	21	10.6	22	8421 9308 04*
LBL45E 025	–	10.0	2500	0.80	1.1	120	2500	16	35.0	20.0	44	9.0	19	8421 9408 52
LBL45E 015	7.0	14.0	2500	0.80	1.1	120	1500	16	35.0	20.0	44	9.0	19	8421 9408 45
LBL45E 010	10.0	16.0	2500	0.80	1.1	120	1000	16	35.0	20.0	44	9.0	19	8421 9408 37
LBL45E 007	14.0[c]	22.0[d]	2500	0.80	1.1	120	700	16	35.0	20.0	44	9.0	19	8421 9408 29*
LBL45E 005	16.0[d]	22.0[e]	2500	0.80	1.1	120	550	16	35.0	20.0	44	9.0	19	8421 9408 11
LBL45E 003	20.0[e]	32.0[f]	2500	0.80	1.1	120	320	16	35.0	20.0	44	9.0	19	8421 9408 03

Recommended max tappping size: [a] M4 [b] M5 [c] M8 [d] M10 [e] M12 [f] M16

* Available directly from stock.

AUTOMATIC DRILLING AND TAPPING UNITS

Selection guide

Steel

Aluminium

LBL45

025	015	010	007	005	003
—	7.0	10.0	14.0 (M8)	16.0 (M10)	20.0 (M12)
10.0	14.0	16.0	22.0 (M12)		32.0 (M16)

LBL35

190	054	030	014	007
—	3.0	5.0	8.0 (M4)	11.0 (M8)
2.0	5.0	7.0	10.0 (M5)	13.0 (M10)

LBL25

220	049	022	011
1.2	3.2	5.0	8.0
2.0	5.0	6.5	10.0

AUTOMATIC DRILLING AND TAPPING UNITS

Optional accessories

Chip removal attachments

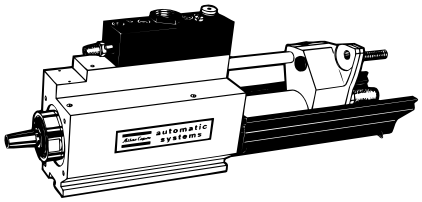

Model	Ordering No.
LBL35	4130 1950 81
LBL45	4130 1950 82

Programmed damping device

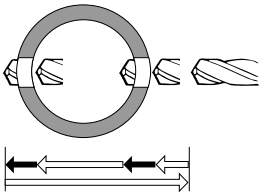

Model	Ordering No.
LBL35, -45	4130 1961 80
To be used together with the hydraulic damper.	

Hydraulic damper

LBL25

Designation	Ordering No.
Hydraulic damper (feed stroke 65 mm)	4130 1844 80
Key chuck (0-6.5 mm)	4021 0283 00
Key chuck (2-10 mm)	4021 0416 00

Key chuck

LBL35

Designation	Ordering No.
Hydraulic damper (feed stroke 65 mm)	4130 1844 80
Key chuck (2.0-13.0 mm)	4021 0452 00
Sleeve chuck (2.0-9.5 mm)	4021 0459 00
Twin spindle head, speed ratio 1:1, centre to centre adjustment range 12.7-63.5 mm	4130 1363 84
Other multiple heads on request	
Tapping unit, M2-M7 SPD3, Taper socket J33	4130 1938 00
Holder for tapping unit SPD3	4130 1787 00
Collet 2.5-5 mm	4021 0412 00
Collet 5-6.3 mm	4021 0413 00
Tapping unit, M3-M12 SPD5, Tapping Socket J33	4130 1939 00
Holder for tapping unit SPD5	4130 1860 00
Collet 3.3-6.8 mm	4021 0337 00
Collet 4.5-8.7 mm	4021 0336 00
Collet 6-10 mm	4021 0456 00

Sleeve chuck

LBL45

Designation	Ordering No.
Hydraulic damper (feed stroke 110 mm)	4130 1895 80
Key chuck (3.2-16.0 mm)	4021 0423 00
Sleeve chuck (2.0-9.5 mm)	4021 0458 00
No. 2 Morse taper socket	4130 1080 00
No. 3 Morse taper socket	4130 1079 00
Twin spindle head, speed ratio 1:1, centre to centre adjustment range 19-95 mm	4130 1364 82
Other multiple heads on request	
Tapping unit, M15-M18 SPD7, Taper socket, J3	4130 1940 00
Holder for tapping unit SPD7	4130 1773 00
Collet 6-10 mm	4023 1059 00

Morse taper socket

Tapping unit

Twin spindle head

Collets for Twin head LBL35

Size mm	Ordering No.	Size mm	Ordering No.
2.1	4130 1367 11	5.0	4130 1367 40
2.3	13	5.1	41
2.5	15	5.2	42
		5.3	43
3.0	4130 1367 20	5.4	44
3.1	21		
3.2	22	6.0	4130 1367 50
3.5	25	6.2	52
3.8	28	6.4	54
3.9	29	6.5	55
4.0	4130 1367 30		
4.1	31		
4.5	35		

Collets for Sleeve chuck LBL35/45 Twin head LBL45

Size mm	Ordering No.	Size mm	Ordering No.
2.0	4130 1561 00.	5.4	34
2.2	02	5.5	35
2.5	05	5.8	38
		5.9	39
3.0	4130 1561 10		
3.2	12	6.0	4130 1561 40
3.5	15	6.2	42
3.6	16	6.4	44
3.7	17	6.5	45
4.0	4130 1561 20	6.7	47
4.2	22	6.9	49
4.5	25		
4.6	26	7.0	4130 1561 50
4.9	29	7.5	55
		8.0	4130 1561 60
5.0	4130 1561 30	8.5	65
5.2	32	9.0	4130 1561 70
5.3	33	9.5	75

TIP MOUNT

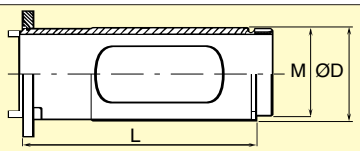

Model	Max stroke	Dimensions, mm L	D	M	Ordering No.
LBL35	73	159	60	M56x1.5L	4140 0090 80
LBL45	110	215	80	M56x1.5L	4140 0092 80

DRILL GUIDE (Screw mount)

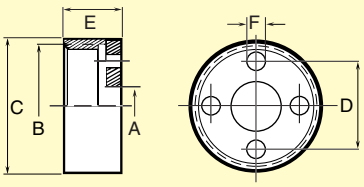

A [a]	B	C	D	E	F	G	H	I	Ordering No.
8, 10, 12,	M56x 1.5L	60 (2.36)	39 (1.54)	25 (0.98)	6.2 (0.24)				4140 0044 08, -10, -12

[a] Dimensions mentioned under A refer to the outside diameter for drill guide bushings.

DRILL GUIDE (Bayonet mount)

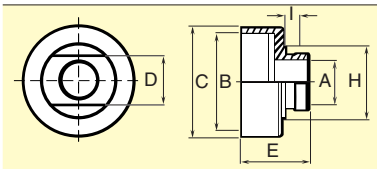

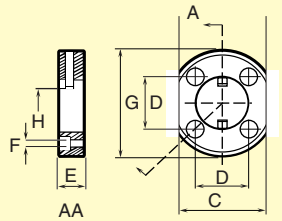

A[a]	B	C	D	E	F	G	H	I	Ordering No.
4	M56x	60	30	37			40h8	6.2	4140 0058 04,
18	1.5L	(2.36)	(1.18)	(1.46)			(1.57)	(0.31)	4140 0058 18
		56 (2.20)	36 (1.50)	15 (0.59)	6.5 (0.26)	67 (2.64)	40F8 (1.57)		4140 0059 80

[a] Dimensions mentioned under A refer to the outside diameter for drill guide bushings.

MOUNTINGS

Ref. No.	Designation	Ordering No. LBL25, LBL35	Ordering No. LBL45
1	Base plate	4140 0077 80	4140 0081 80
2	Base plate	4140 0080 80	4140 0084 80
3	Column mount	4140 0050 00	
4	Side mount	4140 0047 80	4140 0018 80
5	Crossmount	4140 0048 80	4140 0029 80
6	Column socket		
	500 mm long	4140 0051 01	
	250 mm long	4140 0051 02	
	600 mm long		4140 0019 02
	300 mm long		4140 0019 01
7	Column		
	500 mm long	4140 0052 01	
	600 mm long		4140 0020 02
	300 mm long		4140 0020 01
8	Locking bar	4140 0078 00[a]	4140 0082 00[a]
9	Locking bar	4140 0079 00[a]	4140 0083 00[a]

[a] Two per unit.

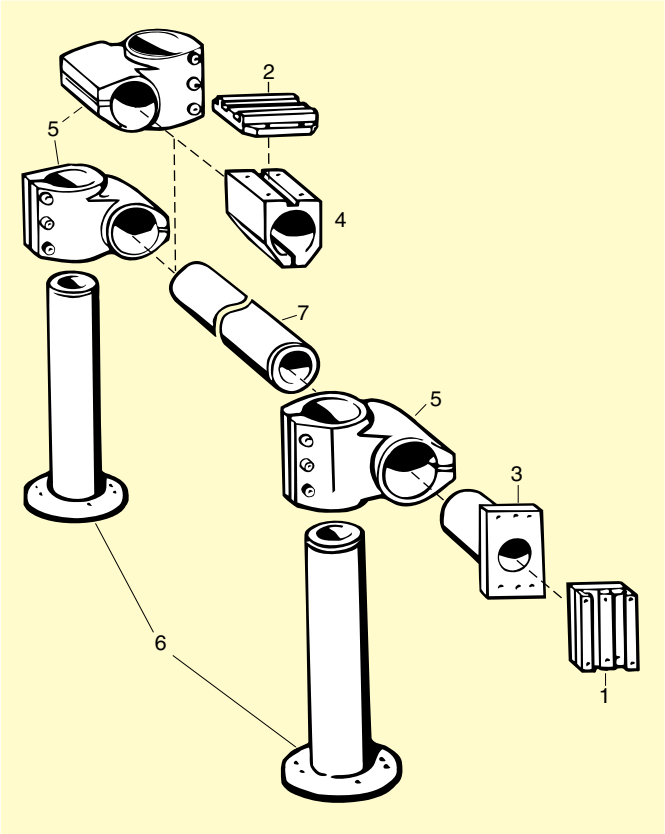

DIMENSION SKETCH – LBL25

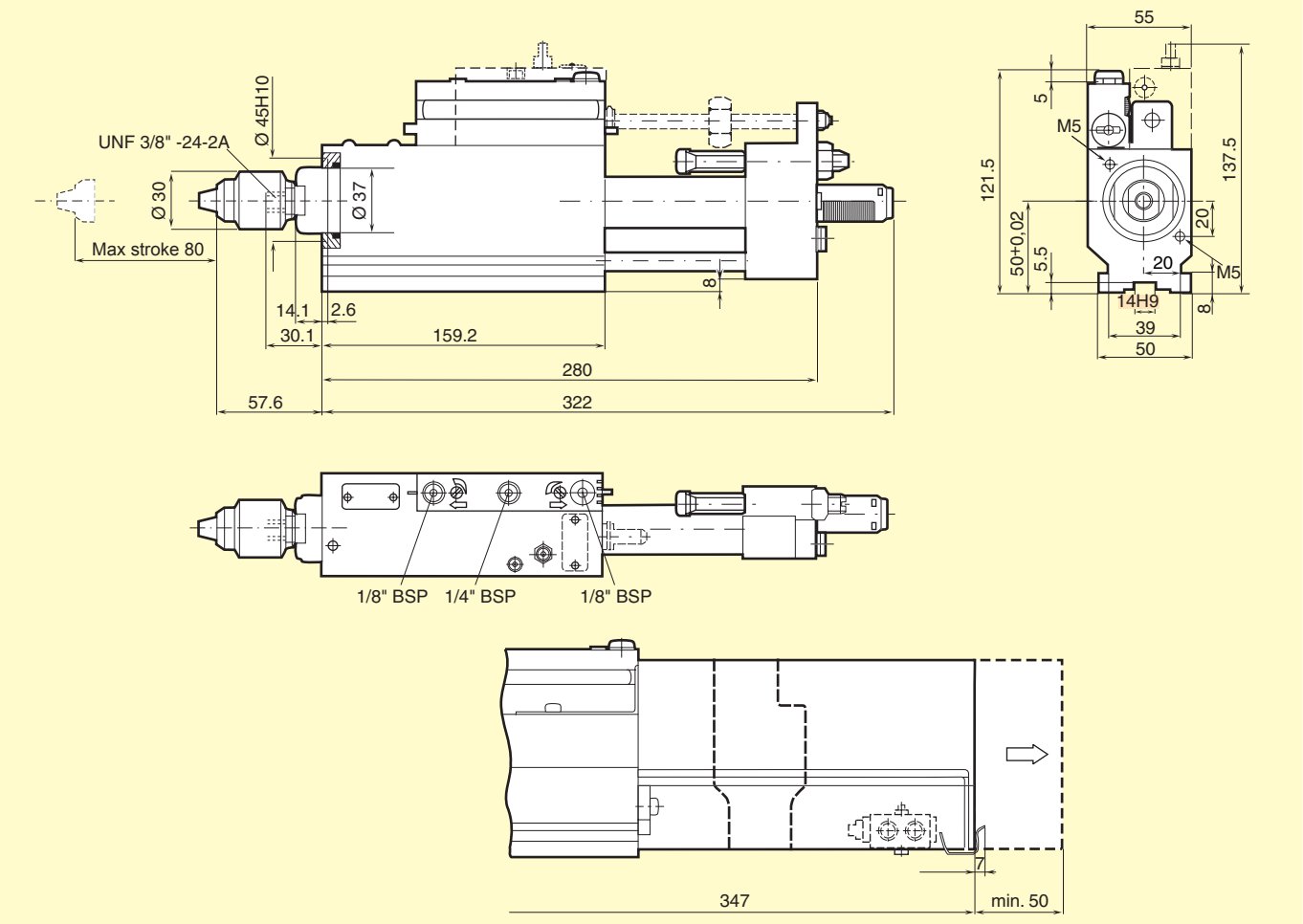

DIMENSION SKETCH – LBL35

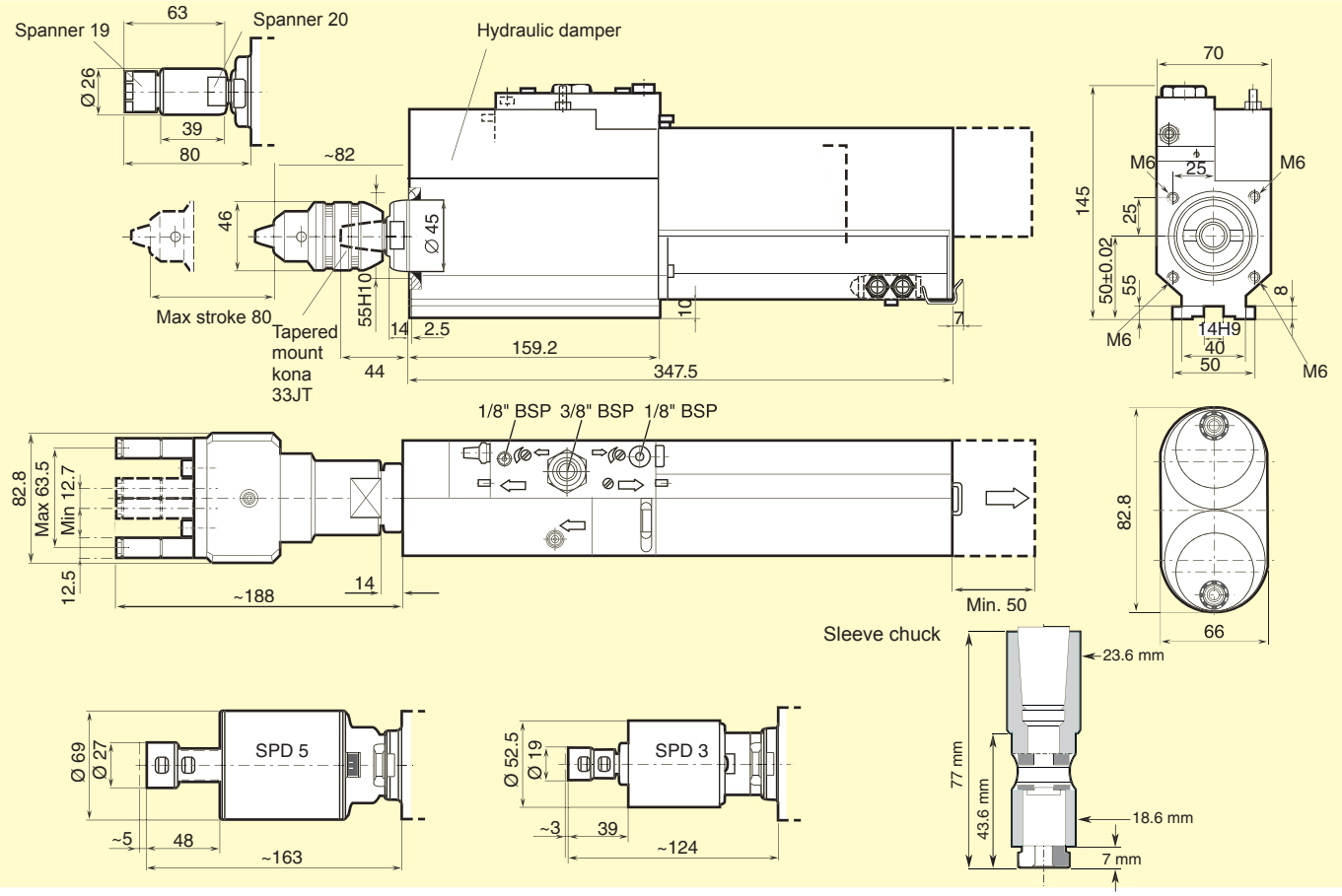

DIMENSION SKETCH – Mountings for LBL25E and -35E

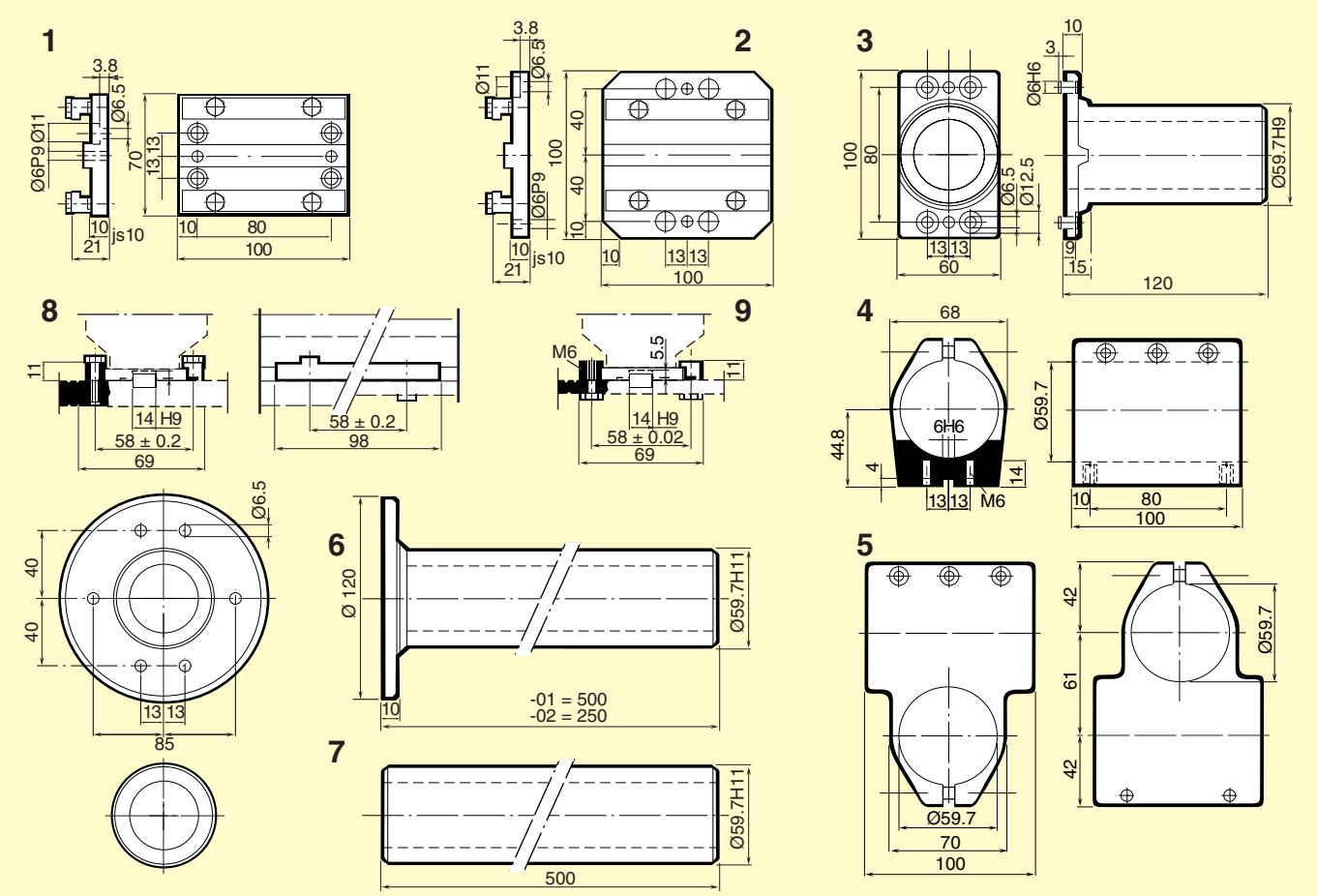

DIMENSION SKETCH – LBL45

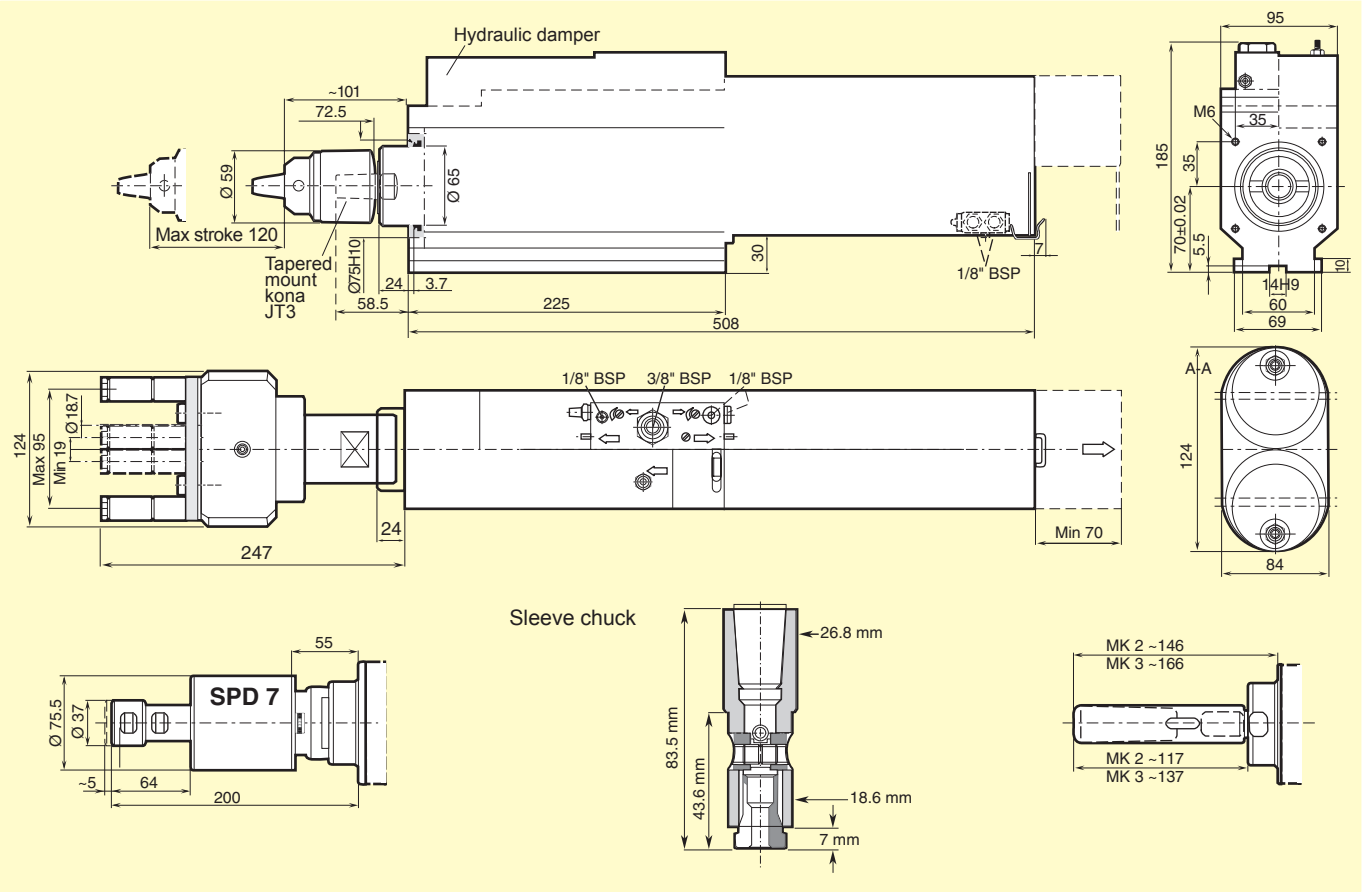

DIMENSION SKETCH – Mountings for LBL45E

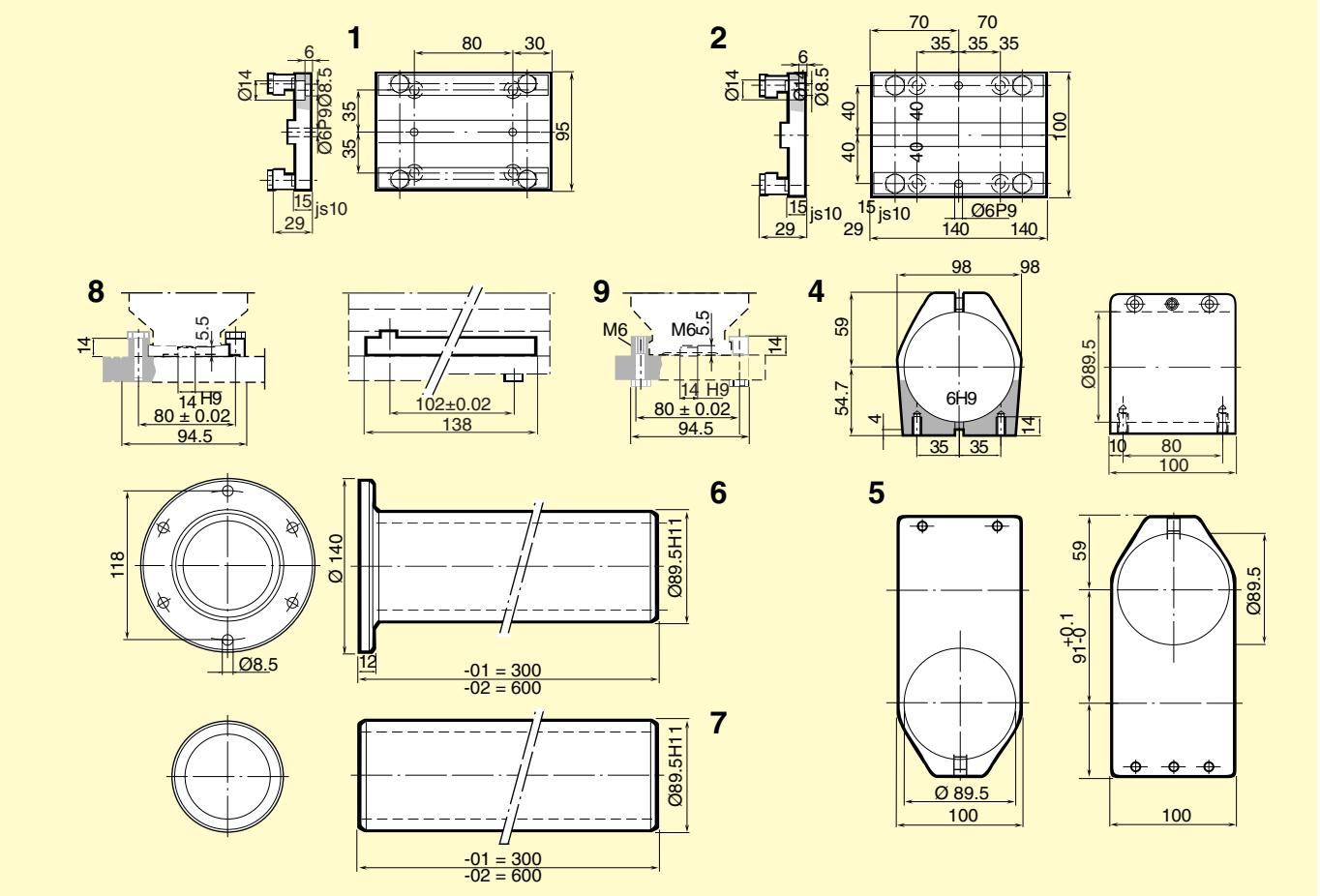

Airline accessories

Get the best from your air tools

Atlas Copco airline accessories mean correct air pressure, whatever the conditions. Atlas Copco quick couplings ensure low pressure drop. Atlas Copco balancers take the weight off the operator and our high-performance hose is up to 50% lighter than conventional hoses.

Contents **Page**

Installation guide 248
Safety guidelines 250
Ball valves 251
Air preparation units 252
Direct lubrication units 260
Quick couplings 262
Claw couplings 274
Fittings 275
Blow protector 277
Hoses 278
Spiral hoses 281
Blow guns 283
Balancers 284
Hose reels 286
Test equipment 289
Installation proposals 290

AIRLINE ACCESSORIES
Installation guide

AIR PREPARATION UNITS, MINI 1/4", MIDI 1/2" and MAXI 1"

The most common way to choose between these three types is to select MIDI wherever possible (this will cover approximately 90% of all the applications). MIDI is suitable for all kinds of assembly tools, percussive tools, drills, nibblers and saws. MIDI can also be used for small grinders.

MAXI can be used as an alternative when necessary. If the tools are major air consumers, large grinders for instance, 80% require MAXI units, and it might be a good idea to install MAXI on all work sites. MAXI is also the choice if more than one tool is going to be connected to the air preparation unit.

MINI can be used as an alternative to the MIDI when using tools with low air consumption. MINI is also the usual system chosen for use with pneumatic components.

FILTER / REGULATOR ①

F/R units are recommended in every case where both filters and regulators are needed. Combined units work as well as separate units, filtering and regulating properties are almost the same as for individual units.

REGULATOR ②

The regulator (REG) is designed to ensure the right working pressure to the tool. A regulator is needed when high accuracy is required on the tools working pressure, this is normally the case when using torque controlled tools, i.e. assembly tools. Too high working pressure also means unnecessarily high air consumption.

OIL-FOG LUBRICATOR ③

The oil fog lubricator (DIM) is used to lubricate air tools which have a normal operation time and is the standard method of lubricating air tools. (It is not needed with lubrication-free tools.)

BALL VALVES ④

Ball valves are required when servicing air preparation units. When claw couplings are used, ball valves are the only way to shut off the air flow. There are two types available: BAL and BAL-1A.

Both are lubricated with silicone-free grease, which is important when spray-painting. BAL type valves can be used in any position from fully open to fully closed. BAL-1A is designed to operate either fully open or fully closed.

METAL BOWL GUARD ⑤

The metal bowl guard is recommended for extra safety when a polycarbonate bowl is used (MINI and MIDI only). The guard helps avoid accidents if the polycarbonate bowl is damaged under pressure. MAXI units have a metal bowl as standard.

AIRLINE ACCESSORIES
Installation guide

DIRECT LUBRICATOR ⑥
If the operation time is very short, direct lubrication at the tool is recommended. The direct lubrication unit (DOS) is connected to the air tool by a nylon tube which is placed inside the air hose. This makes it possible to supply oil at the precise point of operation.

BLOW PROTECTOR ⑦
When a fitting comes loose from a pressurised hose, the hose starts to blow compressed air in an uncontrolled way, whipping around. This can injure people, damage the work-piece and destroy the environment. A way to ensure this does not happen is to use blow protector BLOCK.

QUICK AND CLAW COUPLINGS
Twelve different types exist: ErgoQIC 08, ErgoQIC 10, QIC 08 (S), QIC 10 (S, SE), QIC 15 (S, SE, ST) and CLAW.

The ErgoQIC system is a ball valve coupling system offering a higher air flow than ordinary coupling systems. The QIC system is a normal quick coupling system with high air flows. The QIC S, and QIC SE are quick couplings with a safety function, and made in steel to be durable. The CLAW system is a large bore claw coupling system offering a very high air flow.

For assembly tools, riveting hammers and drills it is recommended that a smaller sized coupling such as QIC 10S (SE) and ErgoQIC 08 is used, but for assembly tools and drills with higher air consumption than 20 l/s it is recommended that QIC 15S (SE, ST) or ErgoQIC 10 are used.

For grinders and percussive tools it is recommended that the bigger sized couplings such as QIC 15S (SE, ST), ErgoQIC 10 and CLAW are used. For smaller grinders with air consumption below 10 l/s ErgoQIC 08 and QIC 10S (SE) can be used.

HOSES ⑧
Choose hoses depending on the working environment. When it is hot, dirty and the hoses are laying on the floor, choose rubber hoses. For bench operations and a clean environment, use the CABLAIR. For all general operations, light grinding to heavy assembly, ordinary PVC or the POLUR hoses will do fine.

WHIP HOSES ⑨
Whip hoses are recommended for use on percussive tools, such as impact wrenches, chipping hammers and on grinders with high vibration levels. Couplings which are connected directly to a percussive tool will need replacement sooner if a whip hose is not used.

HOSE REELS
Hose Reels are an easy, effective and economical way to manage hoses in industrial locations, workshops, and garages. We offer a wide range of hose reels for compressed air, water, grease and oil. Use our Selection Matrix to find the best possible hose reels for your application.

FILTER ⑩
The filter (FIL) is used to remove water and dirt from the compressed air. Clean air prevents corrosion damage and wear of the air tools.

The usual type of drainage on filters is semi-automatic. All filters are accompanied by a kit enabling them to be converted from semi-automatic to manual drainage.

By manual drainage we mean drainage by hand when the filter bowl is full. Semi-automatic drainage takes place when the pressure in the bowl drops below 0.2 bar (providing the air supply is switched off regularly).

PRESSURE CLAMPS ⑪
A single lugged medium pressure clamp is recommended for use on CABLAIR. A medium pressure clamp with screw locking is recommended for PVC and POLUR hoses and smaller rubber hoses up to 16 mm. Heavy duty clamp is recommended for rubber hoses above 16 mm.

AIRLINE ACCESSORIES
Safety guidelines

All local safety regulations with respect to installation, operation and overhaul must always be followed. Please read the separate instructions regarding safety which are supplied with all products in order to improve your own safety!

BALL VALVE

- Switch off the compressed air with the ball valve when you are not working (see fig. 1).
- Open all ball valves gently in order to discover improperly tightened devices (see fig. 5).

AIR PREPARATION UNITS

- Please check for solvents which change the structure of polycarbonate[a] bowls.

These solvents make the polycarbonate brittle so it can break. Normally polycarbonate is not easy to break. If you need to use aggressive solvents, please contact us and we will help you in choosing the right equipment.

- Use bowl guard.

An easy way to eliminate this type of accident is to use a bowl guard on MINI and MIDI units. The MAXI unit has a aluminum bowl with a new more chemical reistant plastic on the inside as standard.

Check that the bowls are properly tightened and that all units are fit together before switching on the compressed air with the ball valve.

QUICK SAFETY COUPLINGS

To increase the safety and reduce the risk of operator injuries we recommend you to always buy couplings with a safety function. Couplings with a safety function are disconnected in two stages in order to went the coupling and minimize the risk of sudden component separation, which has the potential to cause operator injury.

Never open a quick coupling with a screwdriver in order to ventilate the air.

CLAW COUPLINGS

- Be very careful (see fig. 1+2+3).

Are always open and must be used very carefully. To increase the safety when using claw couplings, we recommend the claw LNH claw coupling with a lock nut.

CLAMPS AND CONNECTIONS

- Avoid screwdrivers when tightening.

Check that they are properly tightened. Avoid screwdrivers when tightening, they can easily slip and damage your hand. Use a wrench. If you need to use a screwdriver then mount the clamp in a vice.

HOSES

When mounting hoses on hose connections, use water and soap in order to make the hose slip on to the connection.
Do not use oil. Water and soap will dry up. Remove leaking hoses. A small leakage can quickly become a big hole.

BLOW PROTECTOR (see fig. 6+7).

A dangerous situation can arise with a hose that is accidently blowing compressed air in an uncontrolled way, causing it to whip.

BLOW GUNS

- Use the safety version. It eliminates the risk of high pressure coming into direct contact with skin.

[a] Polycarbonate has good chemical resistance to all solvents except chemicals containing acetone, benzol, glycerine, some hydraulic and synthetic oils, chloroform, methyl alcohol, carbon tetrachloride (and similar solvents), carbon disulphide, perchloroethylene, toluene, trichloroethylene, xylene (nitrocellulose, thinner), acetic acid.

Follow this order when working with claw couplings.

How to open a claw coupling:

❶ Close the ball valve.

❷ Run the tool so the air ventilates out.

❸ Release the claw coupling.

How to close a claw coupling:

❹ Make sure that the two claw couplings are mounted together.

Use claw couplings with lock nut (LNH) or use a lock spring for safer locking.

❺ Open the ball valve gently.

Use of blow protector:

❻ This dangerous situation can be avoided by using a blow protector.

BLOCK blow protector shuts off the air flow so the risk of personal injuries is minimized.

❼ We strongly recommend the use of blow protector BLOCK when using claw couplings.

When a broken hose has been replaced and the compressed air is switched on again the BLOCK is automatically reset.

BALL VALVES

VALVES – BAL AND BAL-1A

The Atlas Copco valves BAL and BAL-1A are both suitable for air, water and many other liquids and gases due to the choice of material.

- **Silicone-free grease** – Both are lubricated with silicone-free grease which is important when spray-painting.
- **Maximum through flow** – Full bore valve to DIN standards.
- Housing and ball made of chrome-plated hot-stamped brass MS 58.
- Handle of enamelled aluminium.

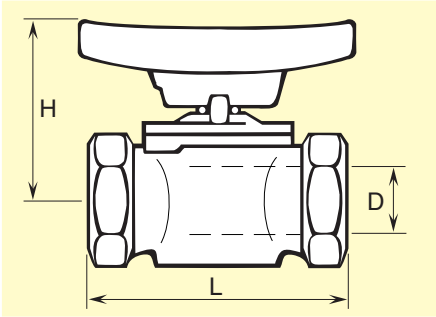

BAL – VALVES WITH NITRILE RUBBER SEALS

The BAL valves can be used in all settings between fully open and fully closed.

The balls and the seals can be replaced without the body being removed from the piping.

Maximum working pressure: 16 bar. Working temperature range: –20°C to +90°C.

Model	Connection thread in BSP	Bore D mm	L mm	H mm	Ordering No.
BAL 08	1/4	9.5	50	41	8202 0301 05*
BAL 10	3/8	9.5	50	41	8202 0302 04*
BAL 15	1/2	12.5	60	43	8202 0303 03*
BAL 20	3/4	19	75	55	8202 0304 02*
BAL 25	1	24.5	90	64	8202 0305 01*

* Available directly from stock.

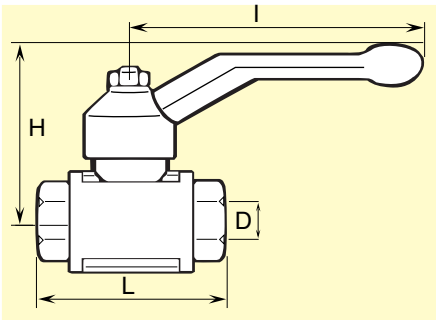

BAL-1A – VALVES WITH TEFLON SEALS

Intended for operating either fully open or fully closed.

Maximum working pressure 16 bar (BAL-1A 40 and 50: max. 16 bar up to +100°C).

Working temperature range: –30°C to +200°C. (BAL-1A 40 and 50: at +200°C max. working pressure is reduced to 8 bar).

Model	Connection thread in BSP	Bore D mm	L mm	H mm	I mm	Ordering No.
BAL-1A 08	1/4	8	43	44	73	8202 0306 03*
BAL-1A 10	3/8	10	50	47	73	8202 0306 11*
BAL-1A 15	1/2	15	61	53	94	8202 0306 29*
BAL-1A 20	3/4	20	70	57	94	8202 0306 37*
BAL-1A 25	1	25	83	67.5	122	8202 0306 45*
BAL-1A 32	1 1/4	32	100	83	150	8202 0306 52*
BAL-1A 40	1 1/2	38	107	87	150	8202 0306 60*
BAL-1A 50	2	50	129	103	193	8202 0306 78*

* Available directly from stock.

DOUBLE CONNECTION

Male taper thread – male taper thread

From thread in	To thread in	Ordering No.
1/8 BSPT	1/8 BSPT	9090 0100 00*
1/8 BSPT	1/4 BSPT	9090 0110 00*
1/4 BSPT	1/4 BSPT	9090 0120 00*
1/4 BSPT	3/8 BSPT	9090 0130 00*
3/8 BSPT	3/8 BSPT	9090 0140 00*
3/8 BSPT	1/2 BSPT	9090 0150 00*
1/2 BSPT	1/2 BSPT	9090 0160 00*
1/2 BSPT	3/4 BSPT	9090 0170 00
3/4 BSPT	3/4 BSPT	9090 0180 00
3/4 BSPT	1 BSPT	9090 0190 00
1 BSPT	1 BSPT	9090 0200 00*

For more fittings see page 275-276.

BUSHING

Male thread – female thread

Male thread in	Female thread in	Ordering No.
1/4 BSP	1/8 BSP	9090 0799 00*
3/8 BSP	1/4 BSP	9090 0798 00*
1/2 BSP	1/4 BSP	9090 1469 00*
1/2 BSP	3/8 BSP	9090 0797 00*
3/4 BSP	1/2 BSP	9090 0796 00*
1 BSP	3/4 BSP	9090 0795 00*

GASKETS

For coupling with thread in/mm	Fibre gasket between material and nipple Ordering No.
M5	0657 5710 00
1/8 BSP	0657 5742 00*
1/4 BSP	0657 5764 00*
3/8 BSP	0657 5785 00*
1/2 BSP	0653 0500 01*
3/4 BSP	0657 5823 00*
1 BSP	0657 5830 00*

* Available directly from stock.

AIR PREPARATION UNITS

A correct air treatment guarantees a good total economy

The only way to ensure maximum capacity and increased service life for your compressed air equipment is to make sure that the air used is correctly processed. This is where Atlas Copco's MINI, MIDI and MAXI air preparation units come in. They are designed to correctly process the air for all types of pneumatic equipment used in industry today. And a correct air treatment guarantees a good total economy of the system.

To guarantee that the machine at the end of the airline delivers its optimum power, each unit is designed to allow the smallest possible pressure drop.

- **Easy to install** – a modern compact design with small installation dimensions.
- **Direct assembly** – which eliminates bulky couplings.
- **Easy to handle** – simple installation and simple dismantling.

Catalogue symbols

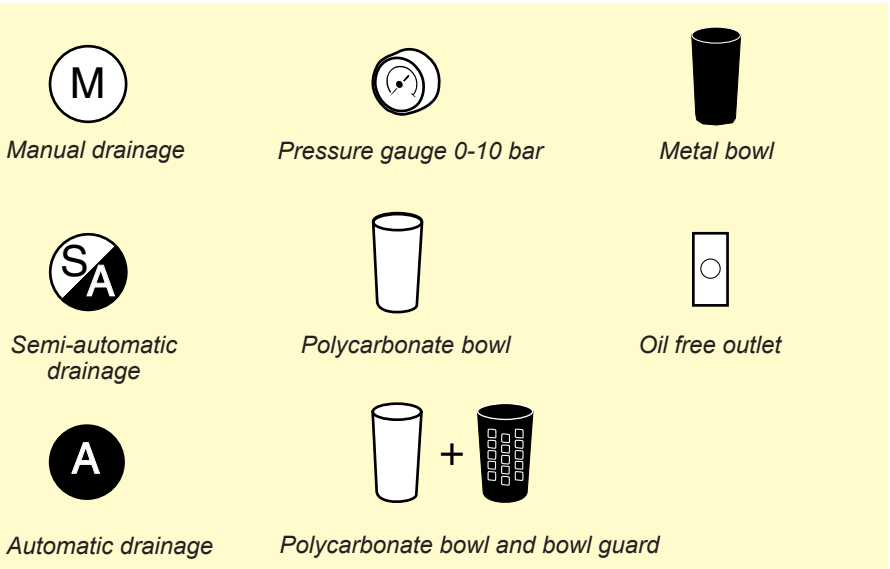

Important standards for air preparation units

European standard EN 983 Safety of machinery
Atlas Copco fulfils all of these demands regarding air preparation units MINI-K, MINI-B, MIDI-C and MAXI.

International standard ISO 4414
The contents of ISO 4414 are the same regarding air preparation units as those of EN 983, which Atlas Copco fulfils for the air preparation units MINI-K, MINI-B, MIDI-C and MAXI-B.

AIR PREPARATION UNITS

FILTER – FIL

Water and dirt in your compressed air system will cause extensive corrosion damage and wear.

- **Cleaner air** – Atlas Copco filters are designed to give clean air with minimal pressure loss and a very high degree of water separation.
- **Longer life for your tool** – Using air filters will result in a noticeable decrease in maintenance costs for the pneumatic equipment used.

REGULATOR – REG

Atlas Copco regulators reduce a variable primary pressure to a practically constant secondary pressure.

- **Good operation economy** – By installing a pressure regulator you can be assured of maintaining a good operating economy.
- **No unnecessary air consumption** – Many pneumatic applications do not require full airline pressure to operate efficiently.

LUBRICATOR – DIM

Atlas Copco oil-fog lubricators ensure a long, efficient and trouble-free life for your pneumatic tools and components.

- **Correct proportion oil to air flow** – Oil fog lubrication is recommended for many tools in continuous operation. The lubricator automatically delivers oil to the working pneumatic unit in correct proportion to the air consumption. Contact us to see if your tool needs oil or not, in the case you are not sure.

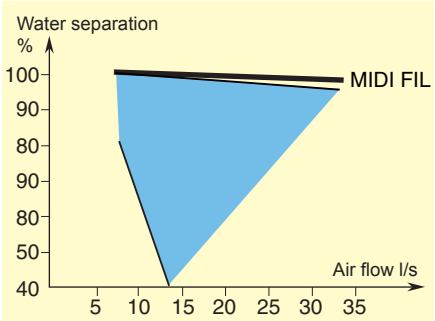

Fig. 1. MIDI FIL 15C – Water separation

The MIDI FIL 15C removes 97% of the water present in the air line at 6 bar and 33 l/s with a minimum pressure drop (see fig. 1 and 2). Competitors fall within the shaded field.

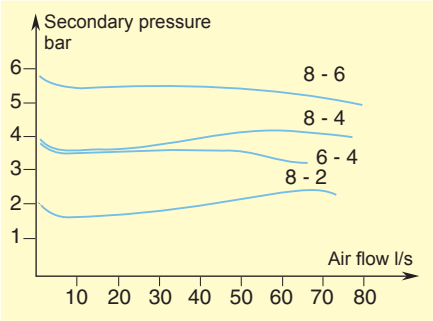

Fig. 3. MIDI REG 15C-S – Secondary pressure versus flow

Flow characteristics, if the regulator is set for a secondary pressure of 6 bar at a constant air line pressure of 8 bar with no air flow, the secondary pressure will drop when air consumption starts. At a flow rate of 10 l/s for instance, the secondary pressure will be 5.5 bar and will remain the same even if the air flow increases up to 50 l/s (see fig. 3).

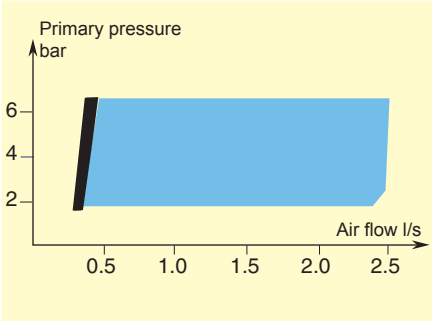

Fig. 4. MIDI DIM 15C – Oil delivery

The MIDI DIM 15C begins delivering oil when the air flow is as low as 0.3 l/s at 6 bar. Competitors fall within the shaded field (see fig. 4).

The figure shows that MIDI DIM 15C has the advantage of a very low pressure drop. Competitors fall within the shaded field (see fig. 5).

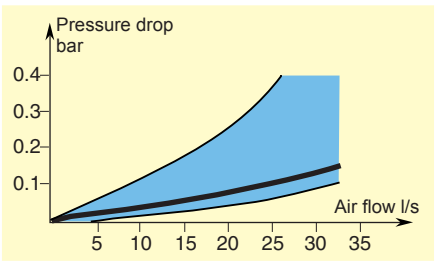

Fig. 2. MIDI FIL 15C – Pressure drop

The combination units MINI F/R, MIDI F/R and MAXI F/R have the same function as FIL and REG together.

Combined air preparation units.

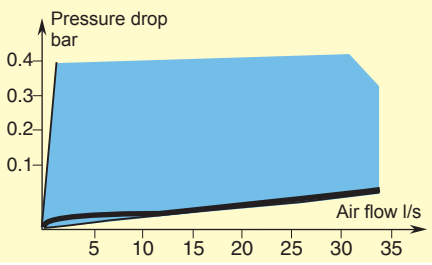

Fig. 5. MIDI DIM 15C – Pressure drop

AIR PREPARATION UNITS

MINI-K – 1/4" BSP

Air preparation unit MINI-K main application is to prepare the air for pneumatic components. MINI-K has a 1/4" BSP connection thread and the housing is of composite.

All separate units, mounting brackets, assembly kits and pressure gauges need to be ordered separately. Please refer to page 259 for accessories. Combination units are delivered complete.

MINI-K 1/4" BSP Model		Max recommended air flow	Filter drainage	Type of bowl	Pressure gauge (thread)
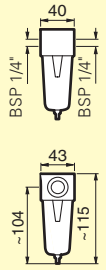	FILTER	12 l/s MINI FIL 08K-B[a] Ordering No. 9092 0000 01	M		
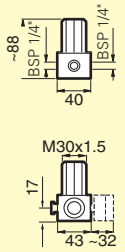	REGULATOR	10 l/s MINI REG 08K[a] Ordering No. 9092 0000 61*			1/8" BSP
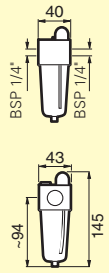	LUBRICATOR	9 l/s MINI DIM 08K[a] Ordering No. 9092 0000 91			

MINI-K 1/4" BSP Model		Max recommended air flow	Filter drainage	Type of bowl	Pressure gauge (thread)
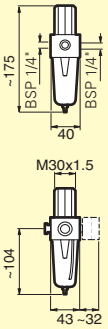	FILTER/REGULATOR	12 l/s MINI F/R 08K[a] Ordering No. 9092 0001 21*	M		1/8" BSP
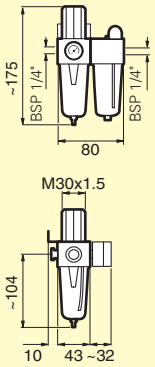	FILTER/REGULATOR+LUBRICATOR	9 l/s MINI F/RD 08K[b] Ordering No. 9092 0001 51*	M		

[a] Accessories page 259.

[b] Mounting bracket, assembly kit and gauge are included.

* Available directly from stock.

AIR PREPARATION UNITS

MINI-B – 1/4" BSP

Air preparation unit MINI-B main application is to prepare the air for pneumatic components and can also be used as a complement for pneumatic tools with low air consumption, i.e. smaller screwdrivers. MINI-B has a 1/4" BSP connection thread and the housing is of metal.

All separate units, mounting brackets, assembly kits and pressure gauges need to be ordered separately. Please refer to page 259 for accessories. Combination units are delivered complete.

MINI-B 1/4" BSP Model		Max recommended air flow	Filter drainage	Type of bowl	Pressure gauge (thread)
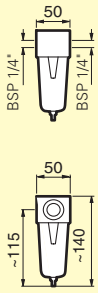	FILTER	12 l/s MINI FIL 08B-B[a] Ordering No. 9093 0032 11*	S/A		
		12 l/s MINI FIL 08B-C[a] Ordering No. 9093 0032 41*	M		
		13 l/s MINI FIL 08B-D[a] Ordering No. 9093 0032 71*	M		
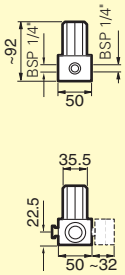	REGULATOR	9 l/s MINI REG 08B[a] Ordering No. 9093 0033 01*			1/8" BSP
		9 l/s Regulator with lock pin MINI REG 08B-LP[a] Ordering No. 9093 0073 21*			1/8" BSP
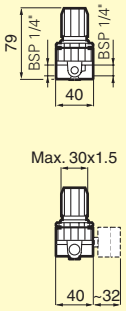	REGULATOR	8 l/s Regulator, panel mounted MINI REG 08P[a] Ordering No. 9093 0000 31*			1/8" BSP

MINI-B 1/4" BSP Model		Max recommended air flow	Filter drainage	Type of bowl	Pressure gauge (thread)
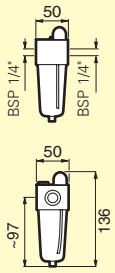	LUBRICATOR	12 l/s MINI DIM 08B[a] Ordering No. 9093 0033 31*			
		12 l/s MINI DIM 08B-D[a] Ordering No. 9093 0033 61*			
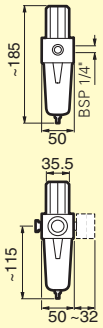	FILTER/REGULATOR	9 l/s MINI F/R 08B-B[a] Ordering No. 9093 0033 91*	S/A		1/8" BSP
		9 l/s MINI F/R 08B-C[a] Ordering No. 9093 0034 21*	M		1/8" BSP
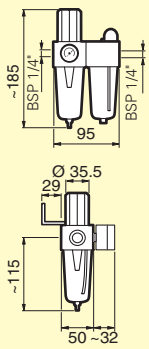	FILTER/REGULATOR+LUBRICATOR	9 l/s MINI F/RD 08B-B[b] Ordering No. 9093 0034 51*	S/A		
		9 l/s MINI F/RD 08B-C[b] Ordering No. 9093 0034 81*	M		
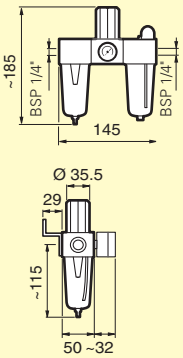	FILTER+REGULATOR+LUBRICATOR	9 l/s MINI FRD 08B-B[b] Ordering No. 9093 0062 11*	S/A		
		9 l/s MINI FRD 08B-C[b] Ordering No. 9093 0062 41*	M		

[a] Accessories page 259. [b] Mounting bracket, assembly kit and gauge are included. * Available directly from stock.

AIR PREPARATION UNITS

MIDI-C – 1/2" BSP

Air preparation unit MIDI-C main application is to prepare the air for pneumatic tools. MIDI-C is suitable for all kinds of assembly tools, percussive tools, drills, nibblers and saws. MIDI-C can also be used for small grinders.

MIDI-C has a 1/2" BSP connection thread and the metal housing.

All separate units, mounting brackets, assembly kits and pressure gauges must be ordered separately. Please refer to page 259 for accessories. Combination units are delivered complete.

MIDI-C 1/2" BSP Model		Max recommended air flow	Filter drainage	Type of bowl	Pressure gauge (thread)
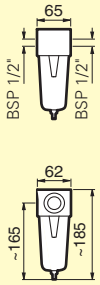	FILTER	38 l/s MIDI FIL 15C-A[a] Ordering No. 9093 0008 11*	A		
	FILTER	38 l/s MIDI FIL 15C-B[a] Ordering No. 9093 0008 71*	S/A		
	FILTER	38 l/s MIDI FIL 15C-D[a] Ordering No. 9093 0009 31*	M		
	FILTER	38 l/s MIDI FIL 15C-AE[a] Ordering No. 9093 0008 41*	A	+	
	FILTER	38 l/s MIDI FIL 15C-BE[a] Ordering No. 9093 0009 01*	S/A	+	
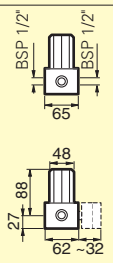	REGULATOR	32 l/s MIDI REG 15C-S[a] Ordering No. 9093 0009 91*			1/4" BSP
	REGULATOR	32 l/s Regulator with lock pin MIDI REG 15C-LP[a] Ordering No. 9093 0073 51			1/4" BSP
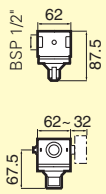	REGULATOR	32 l/s Regulator, servo controlled and mounting bracket MIDI REG 15A[c] Ordering No. 9093 0009 61* Pressure gauge 0-10 bar Ordering No. 9090 1172 00[c] Assembly kit Ordering No. 9090 2058 90[c]			1/8" BSP

MIDI-C 1/2" BSP Model		Max recommended air flow	Filter drainage	Type of bowl	Pressure gauge (thread)
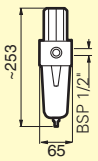	FILTER/REGULATOR	30 l/s MIDI F/R 15C-AS[a] Ordering No. 9093 0011 71*	A		1/4" BSP
	FILTER/REGULATOR	30 l/s MIDI F/R 15C-BS[a] Ordering No. 9093 0012 31*	S/A		1/4" BSP
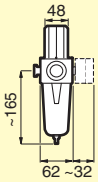	FILTER/REGULATOR	30 l/s MIDI F/R 15C-DS[a] Ordering No. 9093 0012 61*	M		1/4" BSP
	FILTER/REGULATOR	30 l/s MIDI F/R 15C-AES[a] Ordering No. 9093 0011 41*	A	+	1/4" BSP
	FILTER/REGULATOR	30 l/s MIDI F/R 15C-BES[a] Ordering No. 9093 0012 01*	S/A	+	1/4" BSP
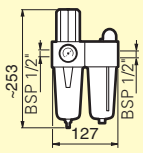	FILTER/REGULATOR+LUBRICATOR	25 l/s MIDI F/RD 15C-AS[b] Ordering No. 9093 0012 91*	A		
	FILTER/REGULATOR+LUBRICATOR	25 l/s MIDI F/RD 15C-BS[b] Ordering No. 9093 0013 51*	S/A		
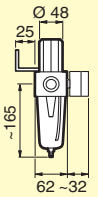	FILTER/REGULATOR+LUBRICATOR	25 l/s MIDI F/RD 15C-BES[b] Ordering No. 9093 0013 21*	S/A	+	

AIR PREPARATION UNITS

MIDI-C – 1/2" BSP

MIDI-C 1/2" BSP Model		Max recommended air flow	Filter drainage	Type of bowl	Pressure gauge (thread)
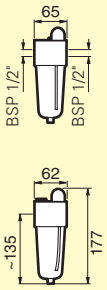	LUBRICATOR	43 l/s MIDI DIM 15C[a] Ordering No. 9093 0010 51*			
		43 l/s MIDI DIM 15C-D[a] Ordering No. 9093 0010 81*			
		43 l/s MIDI DIM 15C-E[a] Ordering No. 9093 0011 11*		+	
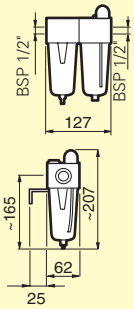	FILTER+LUBRICATOR	35 l/s MIDI FD 15C-BE[b] Ordering No. 9093 0014 11*	S A	+	
		35 l/s MIDI FD 15C-B[b] Ordering No. 9093 0013 81*			

MIDI-C 1/2" BSP Model		Max recommended air flow	Filter drainage	Type of bowl	Pressure gauge (thread)
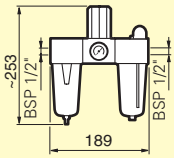	FILTER+REGULATOR +LUBRICATOR	43 l/s MIDI FRD 15C-AS[b] Ordering No. 9093 0014 71*	A		
		43 l/s MIDI FRD 15C-BS[b] Ordering No. 9093 0015 31*	S A		
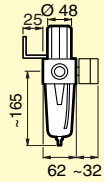	FILTER+REGULATOR +LUBRICATOR	43 l/s MIDI FRD 15C-AES[b] Ordering No. 9093 0014 41*	A	+	
		43 l/s MIDI FRD 15C-BES[b] Ordering No. 9093 0015 01*	S A	+	

[a] Accessories page 259. [b] Mounting bracket, assembly kit and gauge are included.
[c] Accessories for MIDI REG 15A and to connect MIDI REG 15A with MIDI-C units.

* Available directly from stock.

AIR PREPARATION UNITS

MAXI-B – 1" BSP

Air preparation unit MAXI-B main application is to prepare the air for pneumatic tools which are large air consumers. MAXI-B are used for grinders or other tools with a high need of air supply, and also when multi connectors are used. MAXI-B has a 1" BSP connection thread and metal housing.

All separate units, mounting brackets, assembly kits and pressure gauges must be ordered separately. Please refer to page 259 for accessories. Combination units are delivered complete.

MAXI-B 1" BSP Model		Max recommended air flow	Filter drainage	Type of bowl	Pressure gauge (thread)
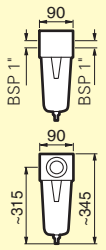	FILTER	106 l/s MAXI FIL 25B-B[a] Ordering No. 9093 0074 21*	SA		
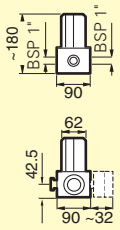	REGULATOR	85 l/s MAXI REG 25B[a] Ordering No. 9093 0074 61*			1/4" BSP
		85 l/s Regulator with lock pin MAXI REG 25B-LP[a] Ordering No. 9093 0074 81*			1/4" BSP
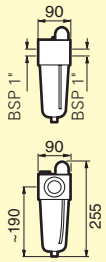	LUBRICATOR	87 l/s MAXI DIM 25B[a] Ordering No. 9093 0075 21*			

MAXI-B 1" BSP Model		Max recommended air flow	Filter drainage	Type of bowl	Pressure gauge (thread)
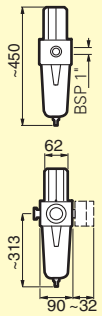	FILTER/ REGULATOR	84 l/s MAXI F/R 25B-B[a] Ordering No. 9093 0075 51*	SA		1/4" BSP
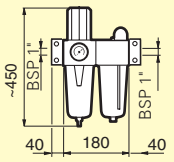	FILTER/REGULATOR+ LUBRICATOR	82 l/s MAXI F/RD 25B-B[b] Ordering No. 9093 0075 81*	SA		
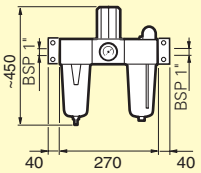	FILTER+REGULATOR+ LUBRICATOR	81 l/s MAXI FRD 25B-B[b] Ordering No. 9093 0076 01*	SA		

[a] Accessories page 259. [b] Mounting bracket, assembly kit and gauge are included. * Available directly from stock.

AIR PREPARATION UNITS

Accessories

MINI-K	MINI-B	MIDI-C	MAXI-B
COMMON ACCESSORIES	Are included in combination units (FD, FTD, F/RD and FRD). Common accessories have to be ordered separately for separate units.		
Mounting bracket kit 9090 1902 00*	Mounting bracket kit 9092 0063 01*	Mounting bracket kit 9090 1655 80*	Mounting bracket kit 9093 0076 15*
Assembly kit 9090 1901 90*	Assembly kit 9092 0062 71*	Assembly kit 9090 1654 00*	Assembly kit 9093 0076 31*
FILTER (FIL) ACCESSORIES	30 µm filter element is included with all filters.		
30 µm filter element 9090 1898 00	30 µm filter element 9092 0063 31 5 µm filter element 9092 0063 61	30 µm filter element 9090 2064 00* 5 µm filter element 9090 2065 00*	30 µm filter element 9093 0076 61* 5 µm filter element 9093 0076 71*
	Bowl guard 9092 0063 91*	Bowl guard 9090 1717 00*	
REGULATOR (REG) ACCESSORIES	Pressure gauge 0-10 bar is included in the combination units (F/RD and FRD). Pressure gauge has to be ordered separately for separate units.		
Pressure gauge: 0-10 bar Ø 40 mm 9090 1907 00*	Pressure gauge: 0-10 bar Ø 40 mm 9090 1907 00* 0-10 bar Ø 50 mm 9090 1172 00* 0-16 bar Ø 50 mm 9090 1657 00*	Pressure gauge: 0-10 bar Ø 50 mm 9090 2052 00* 0-16 bar Ø 50 mm 9090 2053 00*	Pressure gauge: 0-16 bar Ø 49 mm 9090 0239 00* 0-16 bar Ø 63 mm 9093 0076 45*
	Panel mounting pressure gauge: 0-10 bar 9090 1173 00*	Panel mounting pressure gauge: 0-10 bar 9090 1173 00*	Panel mounting pressure gauge: 0-16 bar Ø 63 mm 9093 0076 43*
	For regulator -LP Key lock 9092 0074 11*	For regulator -LP Key lock 9092 0074 11*	For regulator -LP Key lock 9092 0074 11*
LUBRICATOR (DIM) ACCESSORIES			
Air distribution block kit 9090 1900 90	Air distribution block kit 9092 0064 51*	Air distribution block kit 9090 1719 00*	Air distribution block kit 9093 0076 41*
	Bowl guard 9092 0063 91*	Bowl guard 9090 1717 00*	
	Glass sight dome 9090 1121 00*	Glass sight dome 9090 1121 00*	Glass sight dome 9090 1873 00
FIL/REG (F/R) ACCESSORIES	Please see filter (FIL) and regulator (REG) accessories for appropriate accessories.		

* Available directly from stock.

DIRECT LUBRICATION UNITS

SINGLE-POINT LUBRICATOR DOSOL

Accurate lubrication for tools in intermittent service.

The Atlas Copco DOSOL system for direct lubrication is based on an injector pump which meters out the oil in exact doses, actuated by pulses of compressed air. The oil dosage can be regulated from a fraction of a drop to a full drop.

- **Exact amount** – Precision injector adjustable for exact amount of oil.
- **Adjustable dosing** – Counter allows lubrication every first, fifth or tenth start.
- **Oil directly at the tool** – The oil is conveyed through a capillary tube directly to the lubrication point.

For supplying lubricant to a single tool.

Counter included as standard.

A single-point lubricator (SPL) consists of an injector pump fitted to a valve body, converting interruptions in compressed air flow into pulses. In the majority of cases, an oil bowl is fitted on each lubricator. A possible arrangement also consists of a shared oil container for several lubricators, each of which supplies oil to one tool, for example on an assembly line.

Every DOSOL SPL-unit can be finely tuned to inject from 1 to 1/10 th of a drop of oil in 40 steps (30 to 3 mm^3). This helps to minimize the oil dose. Every DOSOL SPL unit includes as standard a counter with a switch that allows the lubricator to operate every first, fifth or tenth tool cycles.

The adjusting knob features a positive stop at both maximum and minimum settings which means that a zero setting is not possible.

The preset quantity of oil is supplied to the tool through a smallbore nylon tube inside the air hose. 7.5 m of oil-filled nylon tubing is included as standard.

DOUBLE CONNECTION

Male taper thread – male taper thread

From thread in	To thread in	Ordering No.
1/2 BSPT	1/2 BSPT	9090 0160 00*
1/2 BSPT	3/4 BSPT	9090 0170 00*

For more fittings see page 275-276.

Single-point lubricator, DOS

Model	Connection thread BSP in	Air flow l/s min	Air flow l/s max[a]	Working pressure bar min	Working pressure bar max	Temperature range °C min	Temperature range °C max	Ordering No.
DOS 15B-C[b]	1/2	2.3	45	3.2	10	–30°	+60°	8202 4201 73*
DOS 15B-CR[c]	1/2	2.3	45	3.2	10	–30°	+60°	8202 4202 72*
DOS 20B-C[b]	3/4	2.3	53	3.2	10	–30°	+60°	8202 4201 81*
DOS 20B-CR[c]	3/4	2.3	53	3.2	10	–30°	+60°	8202 4202 80*

[a] At 6 bar and DP = 0.2 bar.
[b] With counter and 7.5 m oil-filled nylon tubing.
[c] With 0.3 l oil container counter and 7.5 m oil-filled nylon tubing.

* Available directly from stock.

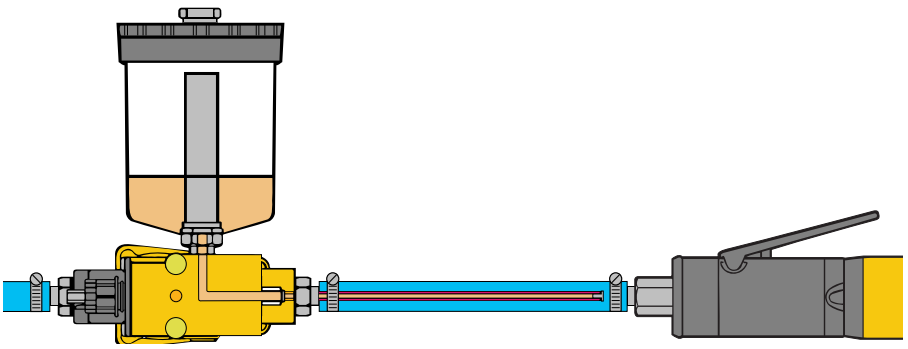

OPTIONAL ACCESSORIES

Designation	Ordering No.
Nylon tubing 3.2 mm outside diameter	
–7.5 m, oil-filled	9090 1418 00*
–7.5 m, without oil	9090 1419 00*
–100 m, with oil	9090 1420 00*
Barbed nipple for joining of 3.2 mm tubes	9090 1423 00*
Check valve for outer end of nylon tubing dia ext. 3.2 mm	9090 2050 00

DIRECT LUBRICATION UNITS

MULTIPLE-POINT LUBRICATOR DOSOL

For supplying lubricant to an unlimited number of lubrication points on a machine or in a pneumatic system.

The DOSOL multiple-point lubricator (MPL) consists of a number of JECT 01 oil metering pumps assembled into a "package" with a common BASE baseplate. A stack may contain up to ten JECT 01 units. Several such assemblies may be used together.

- All oil pumps are supplied with oil via the BASE from an oil container or central oil reservoir. A line for pneumatic signals from the equipment to be lubricated is also connected to the BASE.
- The lubricant is conveyed through small-bore nylon tubing which should be ended with check valves.
- With the TEN counter the lubricator can be actuated every first, fifth or tenth tool cycle.

Every DOSOL MPL unit can be finely tuned to inject from 1 to 1/10 drop of oil in 40 steps (30 to 3 mm^3). This helps to minimize the oil dose. The adjusting knob features a positive stop at both maximum and minimum settings, which means that zero setting is not possible.

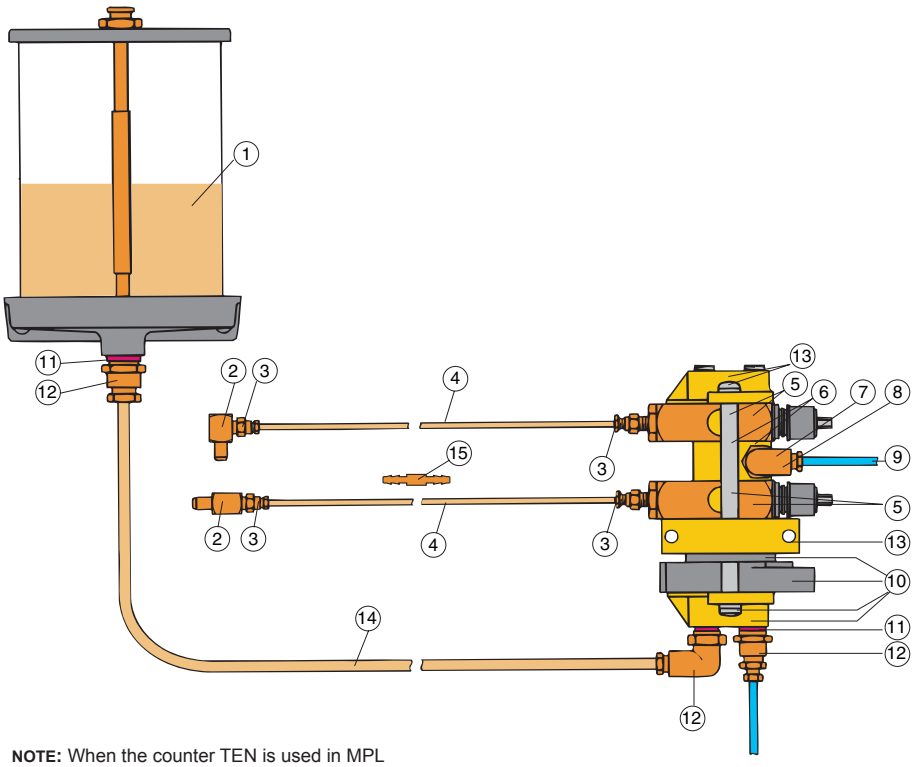

NOTE: When the counter TEN is used in MPL installations an intermediate, black plastic part is used (supplied with all TEN counters) between BASE and TEN.

OPTIONAL ACCESSORIES

Designation	Ordering No.
TEN-counter When lubricating equipment with a very low air consumption or very short time in operation it may be difficult to set a sufficiently small dose of oil. In such cases a counter is connected underneath the base plate BASE. The oil pumps will then be actuated only on each, every fifth or every tenth air pulse. The air signal is connected to the clamp underneath the counter.	8202 4206 03*
Side-ported air block kit If all pumps are not to be actuated simultaneously, a signal block is installed between the oil pumps in the stack. The pumps below the signal block will then be actuated via the base plate BASE and those above it from a separate signal via the signal block.	9090 1424 00*

OPTIONAL ACCESSORIES

Ref No. in figure	Designation	Ordering No.
1	Oil container 0.3 l for direct mounting	9090 1415 00*
1	Oil container 0.95 l for wall mounting (1/4" BSP female)	9090 1416 00*
1	Oil container 1.9 l for wall mounting (1/4" BSP female)	9090 1417 00*
2	Check valve 1/8" BSPT 90° elbow male x 1/8" BSP female	9090 1427 00*
2	Check valve 1/8" BSPT, straight male x 1/8" BSP female	9090 1426 00*
3	Male adapter 1/8" BSPT, straight for tube outer diameter 3.2 mm	9090 1425 00*
4	7.5 m capillary tubing outer diameter 3.2 mm prefilled with oil	9090 1418 00*
4	7.5 m capillary tubing outer diameter 3.2 mm without oil	9090 1419 00*
4	100 m capillary tubing outer diameter 3.2 mm with oil	9090 1420 00*
5	JECT 01 kit[a]	8202 4203 10*
6	Side-ported air block kit	9090 1424 00*
7	Fibre packing for 1/8" BSP	0657 5742 00*
8	Male adapter 1/8" BSP, straight for tube outer diameter 5 mm	9090 0714 00*
9	Nylon tube outer diameter 5 mm (sold by the metre)	9030 0059 00*
10	Counter TEN kit	8202 4206 03*
11	Fibre packing for 1/4" BSP	0657 5764 00*
12	Male adapter 1/4" BSP, straight for tube outer diameter 8 mm	9090 0715 00*
13	BASE kit	8202 4205 04*
14	Nylon tube, outer diameter 8 mm (sold by the metre)	9030 0060 00*
15	Barbed nipple for joining of nylon tubes outer diameter 3.2 mm	9090 1423 00*

[a] With high temperature Viton seals 8202 4203 15.

* Available directly from stock.

DIMENSIONS (in mm)

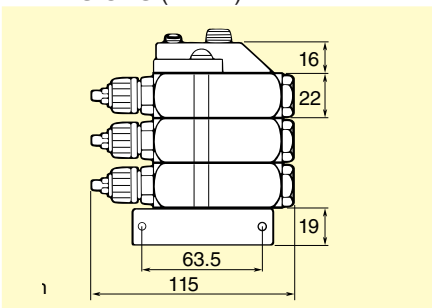

Multiple-point lubricator, BASE, JECT 01

Designation		Connection thread BSP in	Ordering No.
BASE baseplate	Plate		8202 4205 04*
	– Oil port	1/4	
	– Air port	1/4	
	Clamp		
	– Oil port	1/4	
	– Air port	1/4	
JECT 01 oil pump	Oil delivery port	1/8	8202 4203 10*

QUICK COUPLINGS

ErgoQIC, QIC safety couplings and QIC

QIC safety couplings are the best choice, and a define and simple answer whenever tools have to be changed or for making quick connections of hoses to an air outlet. Atlas Copco quick couplings are the outstanding alternative. Our product range of QIC safety couplings are interchangeable with many of the nipple profiles in the market. For example QIC 10 SE have the Euro standard 7.4, and are interchangeable with Cejn 320, TEMA 1600, Hansen Autofol 24, Legris 25-26, Parker Intercheck 35, Prevost ESC 07, and Rectus 25-26. QIC 15 SE have the Euro standard 10.4.

We have also a QIC standard range without safety function. Common for all QIC couplings are high air flow, and made up of steel, which gives a high durability. The valve in each individual coupling is tested for leakage prior to delivery.

Carefully selected material is used in the couplings. This permits the use of thin material which ensures maximum flow and slim outside dimensions.

Atlas Copco ErgoQIC full flow couplings are available in two different sizes and the QIC type in three, depending on the air flow rate.

All couplings are available in a safety version to comply with ISO 4414 and EN 983. These couplings have type name ErgoQIC, QIC S and QIC SE.

For adaption to a broader market the range of safety couplings is interchangeable with other makes. Interchangeability as mentioned below. The couplings are made of steel and nipples of hardened and zincchromated steel.

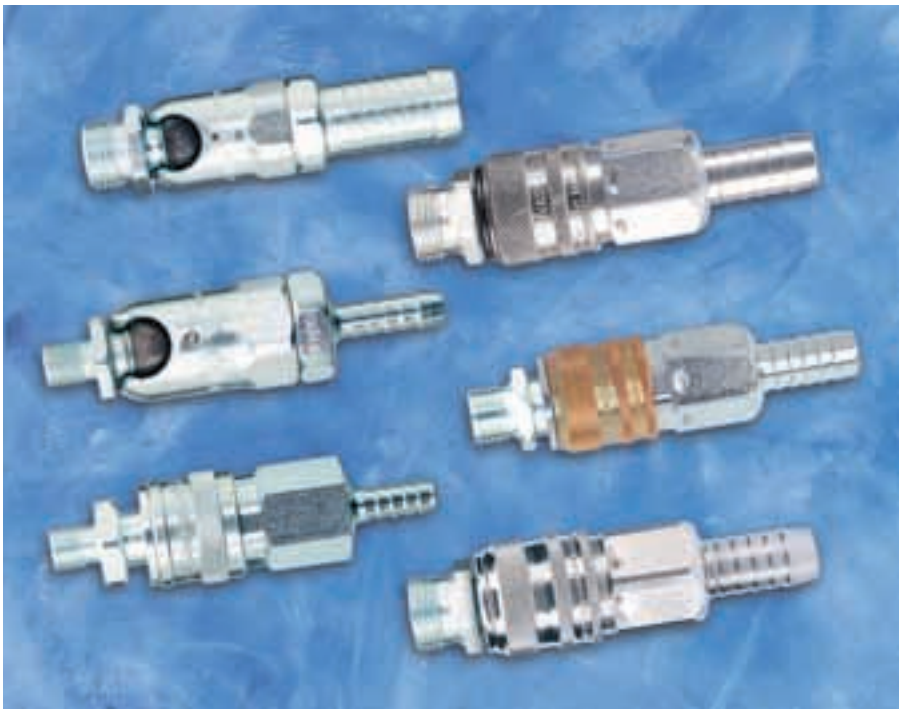

All types and sizes feature

- Exceptionally high air flow with minimum pressure drop, a guarantee for high productivity.
- Built for heavy duty applications.
- Compact dimension and low weight.
- Long service life.
- One-hand operation for fast and easy tool changing.
- Many end connections.
- Safety feature – Means no bang or recoil when disconnecting according to EN 983 and ISO 4414.

ErgoNIP 10

ErgoQIC 10

ErgoNIP 08

ErgoQIC 08

NIP 15/15E/15T

QIC 15/15S/15SE/15ST

NIP 10/10E

QIC 10/10S/10SE

NIP 08

QIC 08/08S

	ErgoQIC 10	ErgoQIC 08	QIC 15S QIC 15SE QIC 15ST	QIC 15	QIC 10S QIC 10SE	QIC 10	QIC 08S	QIC 08
Valve body steel hardened	X	X	X	X	X	X	X	X
One hand operation	X	X	X	X	X	X	X	X
Single shut off	X	X	X	X	X	X	X	X
Ergonomic design	X	X	X		X		X	
Full flow – no restrictions	X	X						
Extremely high air flow	X							

ErgoQIC Full flow couplings

The ErgoQIC is a full flow quick coupling and upgrading any air system with ErgoQIC will give the benefit of more power. This leads to higher productivity and energy savings. ErgoQIC is also having a safety function.

ErgoQIC is effective in operation and easy to handle. Flipping the air flow on or off is literally a pushover. The ball valve swivels through 75° for quick connection/disconnection and safe operation.

Safety feature according to EN 983 and ISO 4414.

Four easy steps to connect and disconnect

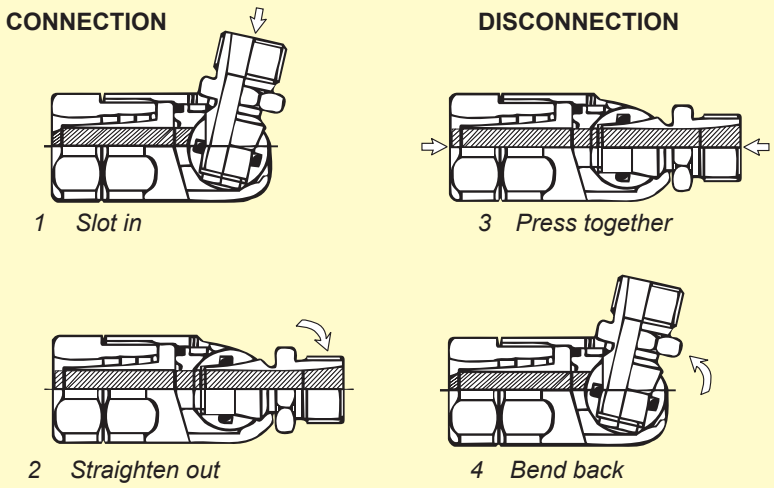

ErgoQIC 08 and ErgoNIP 08

FLOW CHART. ErgoQIC 08 M15 and ErgoNIP 08 M10

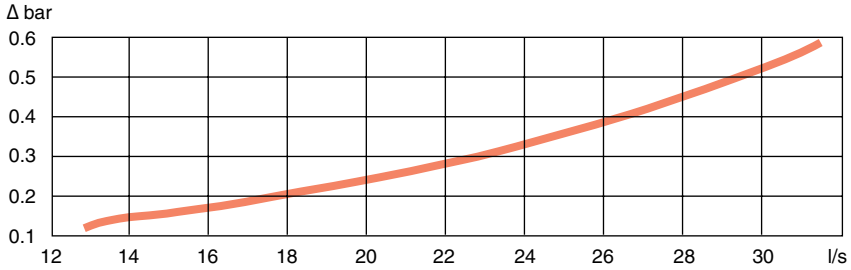

Air flow at an inlet pressure of 6 bar.

ErgoQIC 08 and ErgoNIP 08, 18 l/s (recommended air flow at 6 bar pressure)

Connection type	Coupling ErgoQIC 08	Ordering No.	Size mm	Size in	Connection type	Nipple ErgoNIP 08	Ordering No.	Size mm	Size in
H – Hose 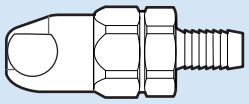	H06 H08 H10 H13	8202 1110 04* 8202 1110 12* 8202 1110 38* 8202 1110 40*	6.3 8 10 12.5	1/4 5/16 3/8 1/2	**H** – Hose 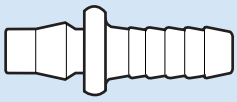	H06 H08 H10 H13	8202 1210 37* 8202 1210 45* 8202 1210 52* 8202 1210 54*	6.3 8 10 12.5	1/4 5/16 3/8 1/2
					SH – Safety Hose[a] 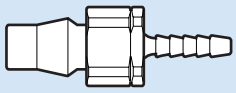	SH06 SH08 SH10 SH13	8202 1210 39* 8202 1210 47* 8202 1210 50* 8202 1210 55*	6.3 8 10 12.5	1/4 5/16 3/8 1/2
M – Male 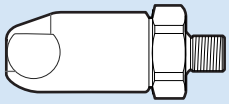	M08 M10 M15	8202 1110 61* 8202 1110 79* 8202 1110 87*	1/4 BSP 3/8 BSP 1/2 BSP		**M** – Male 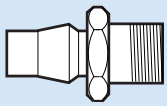	M06 M08 M10 M15	8202 1210 03* 8202 1210 11* 8202 1210 29* 8202 1210 31*	1/8 BSP 1/4 BSP 3/8 BSP 1/2 BSP	
F – Female 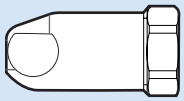	F08 F10	8202 1110 90* 8202 1110 95*	1/4 BSP 3/8 BSP		**F** – Female 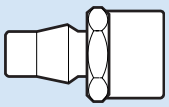	F08 F10	8202 1210 60* 8202 1210 62*	1/4 BSP 3/8 BSP	
Protective cover		9090 1940 00*							

[a] For joining hoses longer than 3 metres.

* Available directly from stock.

QUICK COUPLINGS

ErgoQIC feature

- Full flow with no restrictions in the coupling, which saves energy.
- Ergonomic design, minimized connection force.
- Automatic venting as a tool connector.
- Safety nipple for automatic venting when disconnecting hoses.
- Protective cover as optional accessory to avoid scratches.

FLOW CHART. ErgoQIC 10 M15 and ErgoNIP 10 M15

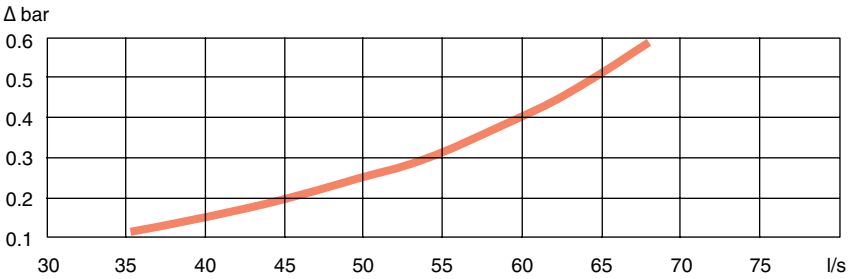

Air flow at an inlet pressure of 6 bar.

TECHNICAL DATA
ErgoQIC 08 and ErgoQIC 10

Temperature range °C		Max. working pressure bar
min	max	
–10	+70	16

ErgoQIC 10 and ErgoNIP 10, 47 l/s (recommended air flow at 6 bar pressure)

Connection type	Coupling ErgoQIC 10	Ordering No.	Size mm	Size in
H – Hose 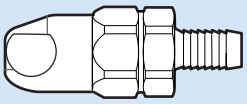	H06	8202 1120 30*	6.3	1/4
	H08	8202 1120 40*	8	5/16
	H10	8202 1120 02*	10	3/8
	H13	8202 1120 10*	12.5	1/2
	H16	8202 1120 50*	16	5/8
	H20	8202 1120 60*	19	3/4
M – Male 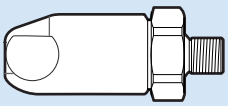	M08	8202 1120 85*	1/4 BSP	
	M10	8202 1120 93*	3/8 BSP	
	M15	8202 1120 97*	1/2 BSP	
F – Female 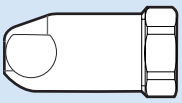	F08	8202 1121 00*	1/4 BSP	
	F10	8202 1121 05*	3/8 BSP	
Protective cover		9090 1931 00*		

Connection type	Nipple ErgoNIP 10	Ordering No.	Size mm	Size in
H – Hose 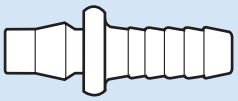	H06	8202 1220 35*	6.3	1/4
	H08	8202 1220 43*	8	5/16
	H10	8202 1220 50*	10	3/8
	H13	8202 1220 68*	12.5	1/2
	H16	8202 1220 76*	16	5/8
	H20	8202 1220 77*	19	3/4
SH – Safety Hose[a] 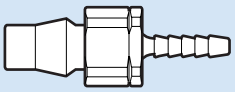	SH06	8202 1220 37*	6.3	1/4
	SH08	8202 1220 45*	8	5/16
	SH10	8202 1220 52*	10	3/8
	SH13	8202 1220 70*	12.5	1/2
	SH16	8202 1220 74*	16	5/8
	SH20	8202 1220 75*	19	3/4
M – Male 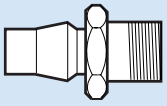	M08	8202 1220 01*	1/4 BSP	
	M10	8202 1220 19*	3/8 BSP	
	M15	8202 1220 27*	1/2 BSP	
F – Female 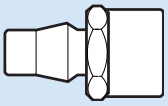	F08	8202 1220 84*	1/4 BSP	
	F10	8202 1220 86*	3/8 BSP	
	F15	8202 1220 88*	1/2 BSP	

[a] For joining hoses longer than 3 metres.

* Available directly from stock.

QUICK COUPLINGS

QIC 08S (Safety coupling)
With the new QIC 08S coupling you can be assured that you are ready to meet the toughest challenges of tomorrow. QIC 08S is made of hardened steel an is capable of withstanding rough treatment. Each coupling is tested for leakage prior to delivery.

Features:

- Safety mechanism that fully complies with ISO 4414 and EN 983.
- Hose whip safety function.
- One-hand operation for fast and easy tool changing.
- Exceptionally high air flow even at low pressure drop.
- Compact dimensions and low weight.
- Solid steel coupling.
- Total interchangeability with existing QIC 08 couplings.

Interchangeable with other makes:
CEJN 310, TEMA 1400, Rectus 23/24. Prevost IRM ISC IRC, JSC 06, Legris 23/24, Hansen 3000 & Auto flo 22, Foster 3000, ARO 23-23902, (US Military Standard 5.3).

QIC 08S has a yellow locking sleeve.

Five easy steps to connect and disconnect

CONNECTION

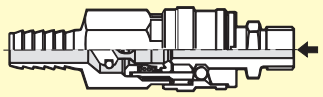

1 Slot in

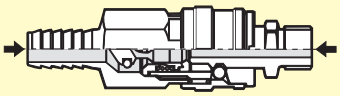

2 Press together

DISCONNECTION

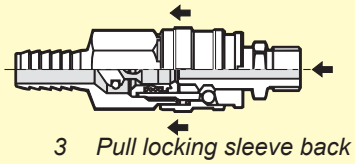

3 Pull locking sleeve back

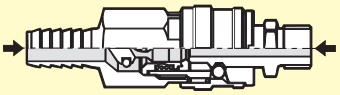

4 Press gently together again

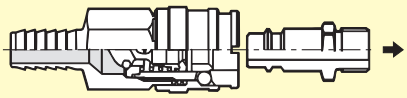

5 Disconnect gently

FLOW CHART. QIC 08S M08 and NIP 08 F08

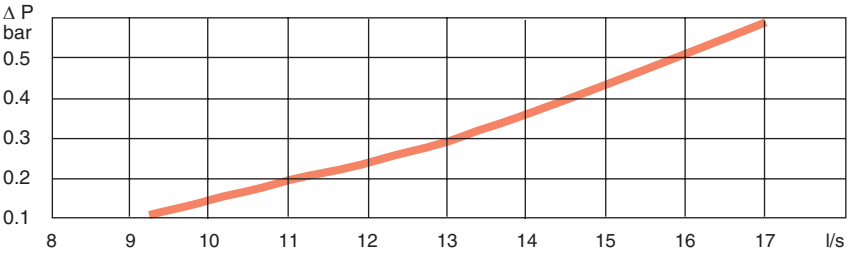

Air flow at an inlet pressure of 6 bar.

TECHNICAL DATA

Temperature range °C		Max. working pressure bar
min	max	
–20	+80	16

QIC 08S and NIP 08, 11 l/s (recommended air flow at 6 bar pressure)

Connection type	Coupling QIC 08S	Ordering No.	Size mm	Size in	Connection type	Nipple NIP 08	Ordering No.	Size mm	Size in
H – Hose 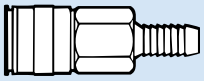	H06 H08 H10	8202 1300 06* 8202 1300 15* 8202 1300 25*	6.3 8 10	1/4 5/16 3/8	**H** – Hose 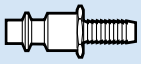	H06 H08 H10	8202 1205 18* 8202 1205 26* 8202 1205 34*	6.3 8 10	1/4 5/16 3/8
M – Male thread 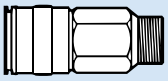	M08 M10	8202 1300 40* 8202 1300 50*	1/4 BSP 3/8 BSP		**M** – Male thread 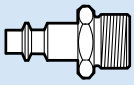	M06 M08 M10	8202 1205 42* 8202 1205 59* 8202 1205 67*	1/8 BSP 1/4 BSP 3/8 BSP	
F – Female thread 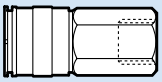	F08 F10	8202 1300 55* 8202 1300 65*	1/4 BSP 3/8 BSP		**F** – Female thread 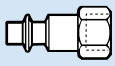	F08 F10	8202 1205 83* 8202 1205 91*	1/4 BSP 3/8 BSP	

* Available directly from stock.

QUICK COUPLINGS

QIC 08

QIC couplings are the traditional but sure answer when hoses have to be changed from one air tool to another or for making fast connections to an air outlet. The small size of the QIC couplings makes them easy and convenient to work with in combination with air tools.

Interchangeability:

QIC 08 standard according to American Military Standard MIL-C 4109C, interchangeable with CEJN 310. TEMA 1400, Rectus 23/24. Prevost IRM ISC IRC, JSC 06, Legris 23/24, Hansen 3000 & Auto flo 22, Foster 3000, ARO 23-23902, (US Military Standard 5.3).

FLOW CHART. QIC 08 M08 and NIP 08 F08

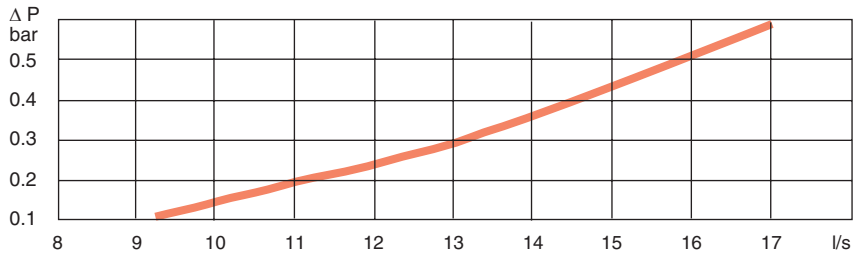

Air flow at an inlet pressure of 6 bar.

QIC 08 and NIP 08

TECHNICAL DATA

Temperature range °C min	Temperature range °C max	Max. working pressure bar
–20	+80	16

QIC 08 and NIP 08, 11 l/s (recommended air flow at 6 bar pressure)

Connection type	Coupling QIC 08	Ordering No.	Size mm	Size in	Connection type	Nipple NIP 08	Ordering No.	Size mm	Size in
H – Hose 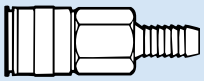	H06 H08 H10	8202 1300 04* 8202 1300 12* 8202 1300 20*	6.3 8 10	1/4 5/16 3/8	**H** – Hose 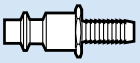	H06 H08 H10	8202 1205 18* 8202 1205 26* 8202 1205 34*	6.3 8 10	1/4 5/16 3/8
M – Male thread 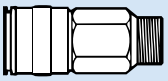	M08 M10	8202 1300 38* 8202 1300 46*	1/4 BSP 3/8 BSP		**M** – Male thread 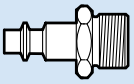	M06 M08 M10	8202 1205 42* 8202 1205 59* 8202 1205 67*	1/8 BSP 1/4 BSP 3/8 BSP	
F – Female thread 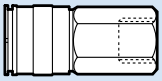	F08 F10	8202 1300 53* 8202 1300 61*	1/4 BSP 3/8 BSP		**F** – Female thread 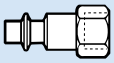	F08 F10	8202 1205 83* 8202 1205 91*	1/4 BSP 3/8 BSP	

* Available directly from stock.

QUICK COUPLINGS

QIC 10S (Safety coupling)
With the new QIC 10S coupling you can be assured that you are ready to meet the toughest challenges of tomorrow. QIC 10S is made of hardened steel an is capable of withstanding rough treatment. Each coupling is tested for leakage prior to delivery.

Features:

- Safety mechanism that fully complies with ISO 4414 and EN 983.
- Hose whip safety function.
- One-hand operation for fast and easy tool changing.
- Exceptionally high air flow even at low pressure drop.
- Compact dimensions and low weight.
- Solid steel coupling.
- Total interchangeability with existing QIC 10 couplings.

Interchangeable with other makes:
Tema series 1650 and Rectus series 33.

QIC 10S has a yellow locking sleeve.

Five easy steps to connect and disconnect

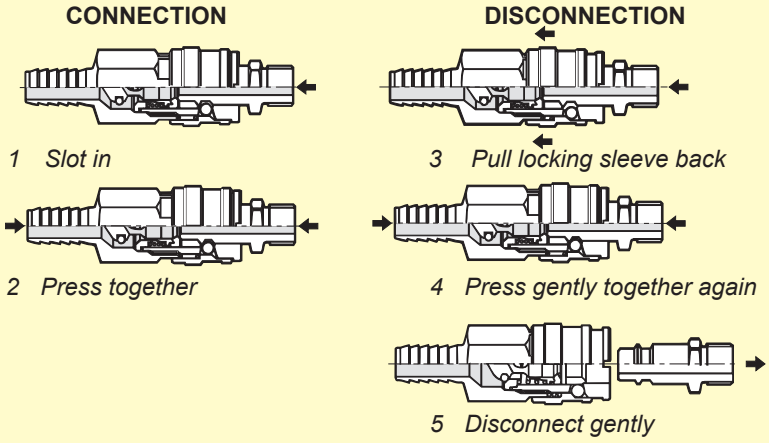

FLOW CHART. QIC 10S M10 and NIP 10 M10

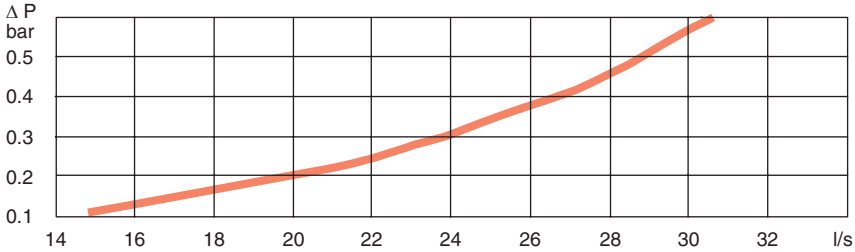

Air flow at an inlet pressure of 6 bar.

TECHNICAL DATA

Temperature range °C		Max. working pressure bar
min	max	
–20	+80	16

QIC 10S and NIP 10, 20 l/s (recommended air flow at 6 bar pressure)

Connection type	Coupling QIC 10S	Ordering No.	Size mm	Size in	Connection type	Nipple NIP 10	Ordering No.	Size mm	Size in
H – Hose 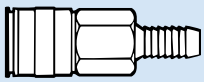	H06	8202 1302 05*	6.3	1/4	**H** – Hose	H06	8202 1202 11*	6.3	1/4
	H08	8202 1302 15*	8	5/16		H08	8202 1202 94*	8	5/16
	H10	8202 1302 30*	10	3/8		H10	8202 1202 29*	10	3/8
	H13	8202 1302 35*	12.5	1/2		H13	8202 1202 34*	12.5	1/2
M – Male thread 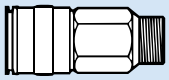	M08	8202 1302 40*	1/4 BSP		**M** – Male thread 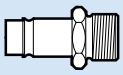	M06	8202 1202 37*	1/8 BSP	
	M10	8202 1302 50*	3/8 BSP			M08	8202 1202 45*	1/4 BSP	
	M15	8202 1302 78*	1/2 BSP			M10	8202 1202 52*	3/8 BSP	
MT – Male taper thread 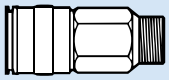	MT15	8202 1302 55*	1/2 BSPT		**MT** – Male taper thread 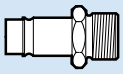	MT08	8202 1202 60*	1/4 BSPT	
						MT10	8202 1202 78*	3/8 BSPT	
						MT15	8202 1203 02*	1/2 BSPT	
F – Female 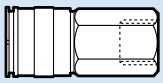	F08	8202 1302 75*	1/4 BSP		**F** – Female 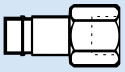	F08	8202 1202 86*	1/4 BSP	

* Available directly from stock.

QUICK COUPLINGS

QIC 10SE (Safety coupling)
With the new QIC 10SE coupling you can be assured that you are ready to meet the toughest challenges of tomorrow. QIC 10SE is made of hardened steel an is capable of withstanding rough treatment. Each coupling is tested for leakage prior to delivery.

Features:

- Safety mechanism that fully complies with ISO 4414 and EN 983.
- Hose whip safety function.
- One-hand operation for fast and easy tool changing.
- Exceptionally high air flow even at low pressure drop.
- Compact dimensions and low weight.
- Solid steel coupling.

Interchangeable with other makes:
CEJN 320, TEMA 1600, Hansen Auto Flo 24, Legris 25-26, Parker Intercheck 35, Prevost ESC 07, Rectus 25-26, JWL 520, (Eurostandard 7.4).

QIC 10SE

Five easy steps to connect and disconnect

CONNECTION **DISCONNECTION**

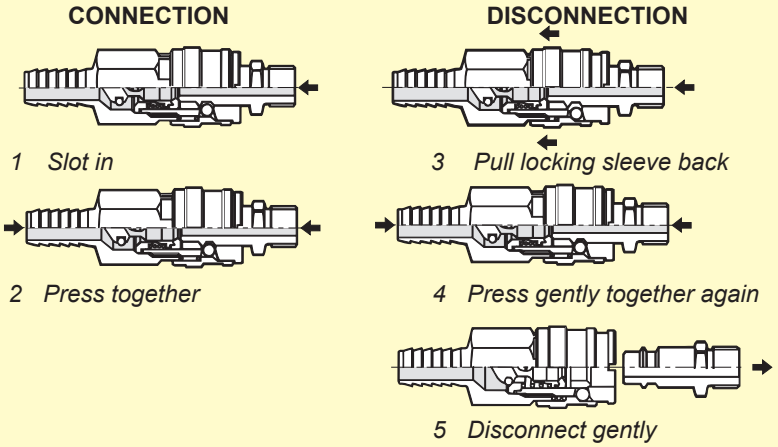

FLOW CHART. QIC 10SE M10 and NIP 10E M10

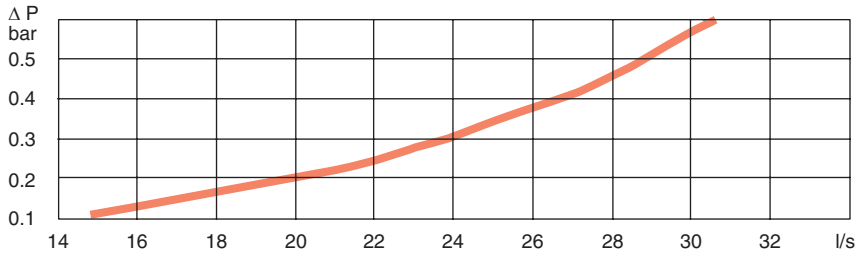

Air flow at an inlet pressure of 6 bar.

TECHNICAL DATA

Temperature range °C min	Temperature range °C max	Max. working pressure bar
–20	+80	16

QIC 10SE and NIP 10E, 20 l/s (recommended air flow at 6 bar pressure)

Connection type	Coupling QIC 10SE	Ordering No.	Size mm	Size in	Connection type	Nipple NIP 10E	Ordering No.	Size mm	Size in
H – Hose 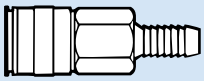	H06 H08 H10 H13	8202 1303 20* 8202 1303 21* 8202 1303 22* 8202 1303 23*	6.3 8 10 12.5	1/4 5/16 3/8 1/2	**H** – Hose	H05 H06 H08 H10 H13	8202 1204 00* 8202 1204 05* 8202 1204 10* 8202 1204 15* 8202 1204 20*	5 6.3 8 10 12.5	3/16 1/4 5/16 3/8 1/2
M – Male thread 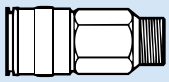	M08 M10 M15	8202 1303 24* 8202 1303 25* 8202 1303 36*	1/4 BSP 3/8 BSP 1/2 BSP		**M** – Male thread 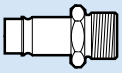	M06 M08 M10	8202 1204 25* 8202 1204 30* 8202 1204 35*	1/8 BSP 1/4 BSP 3/8 BSP	
MT – Male taper thread 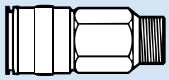	MT15	8202 1303 26*	1/2 BSPT		**MT** – Male taper thread 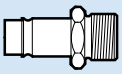	MT08 MT10 MT15	8202 1204 40* 8202 1204 45* 8202 1204 50*	1/4 BSPT 3/8 BSPT 1/2 BSPT	
F – Female 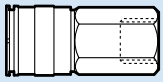	F08 F15	8202 1303 27* 8202 1303 33*	1/4 BSP 1/2 BSP		**F** – Female 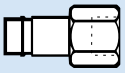	F08	8202 1204 55*	1/4 BSP	

* Available directly from stock.

QUICK COUPLINGS

QIC 10

QIC couplings are the traditional but sure answer when hoses have to be changed from one air tool to another or for making fast connections to an air outlet. The small size of the QIC couplings makes them easy and convenient to work with in combination with air tools.

Interchangeability:
QIC 10 is interchangeable with TEMA series 1650 and Rectus series 33.

FLOW CHART. QIC 10 M10 and NIP 10 M10

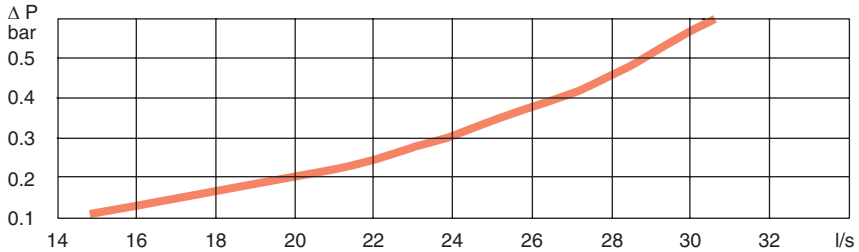

Air flow at an inlet pressure of 6 bar.

QIC 10 and NIP 10

TECHNICAL DATA

Temperature range °C		Max. working pressure bar
min	max	
–20	+80	16

QIC 10 and NIP 10, 20 l/s (recommended air flow at 6 bar pressure)

Connection type	Coupling QIC 10	Ordering No.	Size mm	Size in	Connection type	Nipple NIP 10	Ordering No.	Size mm	Size in
H – Hose 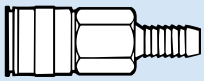	H06 H08 H10 H13	8202 1302 02* 8202 1302 10* 8202 1302 28* 8202 1302 34*	6.3 8 10 12.5	1/4 5/16 3/8 1/2	**H** – Hose	H06 H08 H10 H13	8202 1202 11* 8202 1202 94* 8202 1202 29* 8202 1202 34*	6.3 8 10 12.5	1/4 5/16 3/8 1/2
					SH – Safety Hose[a] 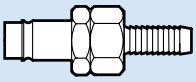	SH06 SH08 SH10	8202 1203 10* 8202 1203 36* 8202 1203 28*	6.3 8 10	1/4 5/16 3/8
M – Male thread 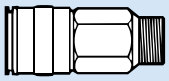	M08 M10	8202 1302 36* 8202 1302 44*	1/4 BSP 3/8 BSP		**M** – Male thread 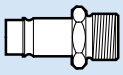	M06 M08 M10	8202 1202 37* 8202 1202 45* 8202 1202 52*	1/8 BSP 1/4 BSP 3/8 BSP	
MT – Male taper thread 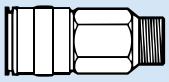	MT15	8202 1302 51*	1/2 BSPT		**MT** – Male taper thread 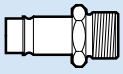	MT08 MT10 MT15	8202 1202 60* 8202 1202 78* 8202 1203 02*	1/4 BSPT 3/8 BSPT 1/2 BSPT	
F – Female 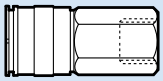	F08	8202 1302 69*	1/4 BSP		**F** – Female 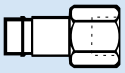	F08	8202 1202 86*	1/4 BSP	

[a] For hoses longer than 3 metres.

* Available directly from stock.

QUICK COUPLINGS

QIC 15S (Safety coupling)
With the new QIC 15S coupling you can be assured that you are ready to meet the toughest challenges of tomorrow. QIC 15S is made of hardened steel an is capable of withstanding rough treatment. Each coupling is tested for leakage prior to delivery.

Features:

- Safety mechanism that fully complies with ISO 4414 and EN 983.
- Hose whip safety function.
- One-hand operation for fast and easy tool changing.
- Exceptionally high air flow even at low pressure drop.
- Compact dimensions and low weight.
- Solid steel coupling.
- Total interchangeability with existing QIC 15 couplings.

Interchangeable with other makes:
TEMA series 1750 and R Rectus series 34.

QIC 15S has a yellow locking sleeve.

Five easy steps to connect and disconnect

CONNECTION **DISCONNECTION**

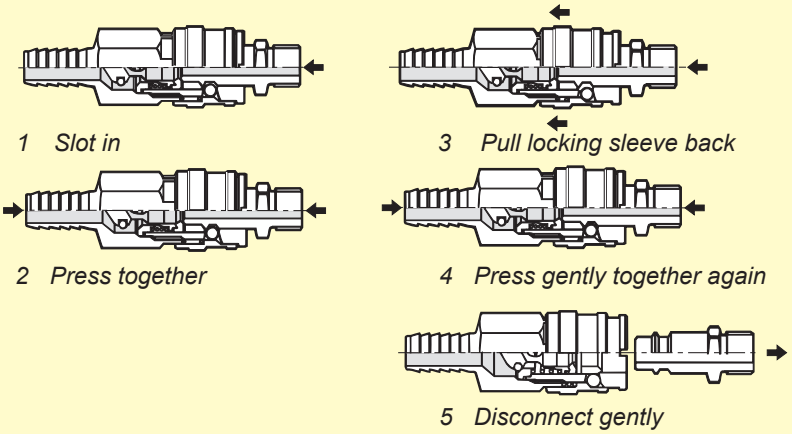

FLOW CHART. QIC 15S M15 and NIP 15 F15

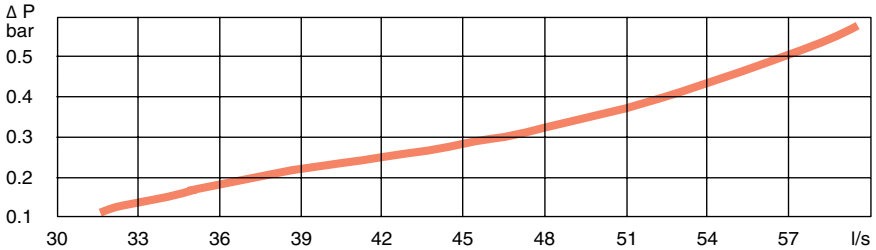

Air flow at an inlet pressure of 6 bar.

TECHNICAL DATA

Temperature range °C min	Temperature range °C max	Max. working pressure bar
–20	+80	10

QIC 15S and NIP 15, 37 l/s (recommended air flow at 6 bar pressure)

Connection type	Coupling QIC 15S	Ordering No.	Size mm	Size in	Connection type	Nipple NIP 15	Ordering No.	Size mm	Size in
H – Hose 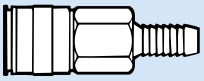	H10	8202 1304 05*	10	3/8	**H** – Hose 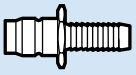	H06	8202 1251 03*	6.3	1/4
	H13	8202 1304 20*	12.5	1/2		H08	8202 1252 28*	8	5/16
	H16	8202 1304 30*	16	5/8		H10	8202 1251 11*	10	3/8
						H13	8202 1251 29*	12.5	1/2
						H16	8202 1251 37*	16	5/8
M – Male thread 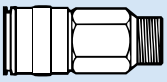	M08	8202 1304 35*	1/4" BSP		**M** – Male thread 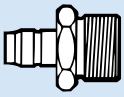	M10	8202 1251 45*	3/8" BSP	
	M10	8202 1304 45*	3/8" BSP			M15	8202 1251 52*	1/2" BSP	
	M15	8202 1304 65*	1/2" BSP						
					MT – Male taper thread 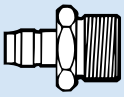	MT08	8202 1251 60*	1/4" BSPT	
						MT10	8202 1251 78*	3/8" BSPT	
						MT15	8202 1251 86*	1/2" BSPT	
F – Female thread 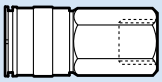	F15	8202 1304 70*	1/2" BSP		**F** – Female thread 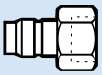	F08	8202 1251 94*	1/4" BSP	
						F10	8202 1252 02*	3/8" BSP	
						F15	8202 1252 10*	1/2" BSP	

* Available directly from stock.

QUICK COUPLINGS

QIC 15SE (Safety coupling)
With the new QIC 15SE coupling you can be assured that you are ready to meet the toughest challenges of tomorrow. QIC 15SE is made of hardened steel an is capable of withstanding rough treatment. Each coupling is tested for leakage prior to delivery.

Features:

- Safety mechanism that fully complies with ISO 4414 and EN 983.
- Hose whip safety function.
- One-hand operation for fast and easy tool changing.
- Exceptionally high air flow even at low pressure drop.
- Compact dimensions and low weight.
- Solid steel coupling.

Interchangeable with other makes:
CEJN 410, TEMA 1700, Legris 27, Parker Intercheck 55, Rectus 27, (Euro standard 10.4).

QIC 15SE

Five easy steps to connect and disconnect

CONNECTION **DISCONNECTION**

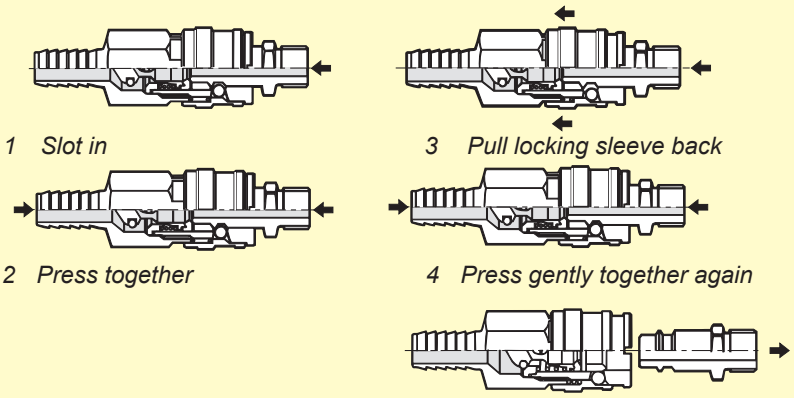

1 Slot in

2 Press together

3 Pull locking sleeve back

4 Press gently together again

5 Disconnect gently

FLOW CHART. QIC 15SE M15 and NIP 15E F15

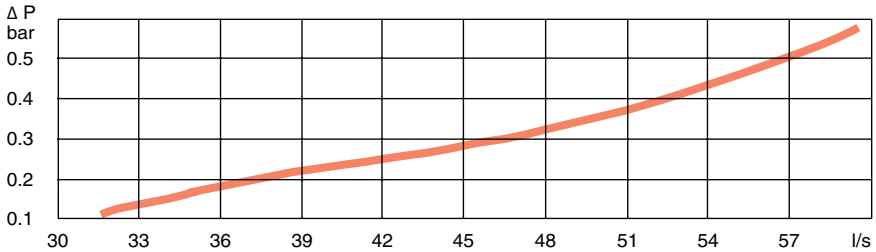

Air flow at an inlet pressure of 6 bar.

TECHNICAL DATA

Temperature range °C min	max	Max. working pressure bar
–20	+80	10

QIC 15SE and NIP 15E, 37 l/s (recommended air flow at 6 bar pressure)

Connection type	Coupling QIC 15SE	Ordering No.	Size mm	Size in	Connection type	Nipple NIP 15E	Ordering No.	Size mm	Size in
H – Hose 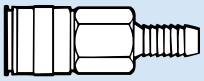	H10 H13 H16	8202 1305 20* 8202 1305 21* 8202 1305 22*	10 12.5 16	3/8 1/2 5/8	**H** – Hose	H06 H08 H10 H13 H16	8202 1253 00* 8202 1253 05* 8202 1253 10* 8202 1253 15* 8202 1253 20*	6.3 8 10 12.5 16	1/4 5/16 3/8 1/2 5/8
M – Male thread 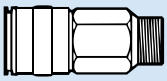	M08 M10 M15	8202 1305 23* 8202 1305 24* 8202 1305 25*	1/4" BSP 3/8" BSP 1/2" BSP		**M** – Male thread 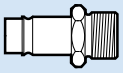	M10 M15	8202 1253 25* 8202 1253 30*	3/8" BSP 1/2" BSP	
					MT – Male taper thread 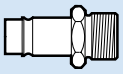	MT08 MT10 MT15	8202 1253 35* 8202 1253 40* 8202 1253 45*	1/4" BSPT 3/8" BSPT 1/2" BSPT	
F – Female thread 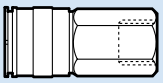	F15	8202 1305 26*	1/2" BSP		**F** – Female thread 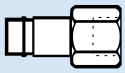	F08 F10 F15	8202 1253 50* 8202 1253 55* 8202 1253 60*	1/4" BSP 3/8" BSP 1/2" BSP	

* Available directly from stock.

QUICK COUPLINGS

QIC 15ST (Safety coupling)
With the new QIC 15ST coupling you can be assured that you are ready to meet the toughest challenges of tomorrow. QIC 15ST is made of hardened steel an is capable of withstanding rough treatment. Each coupling is tested for leakage prior to delivery.

Features:

- Safety mechanism that fully complies with ISO 4414 and EN 983.
- Hose whip safety function.
- One-hand operation for fast and easy tool changing.
- Exceptionally high air flow even at low pressure drop.
- Compact dimensions and low weight.
- Solid steel coupling.

Interchangeable with other makes:
CEJN 408, TEMA 1800, Rectus 32.

Five easy steps to connect and disconnect

CONNECTION **DISCONNECTION**

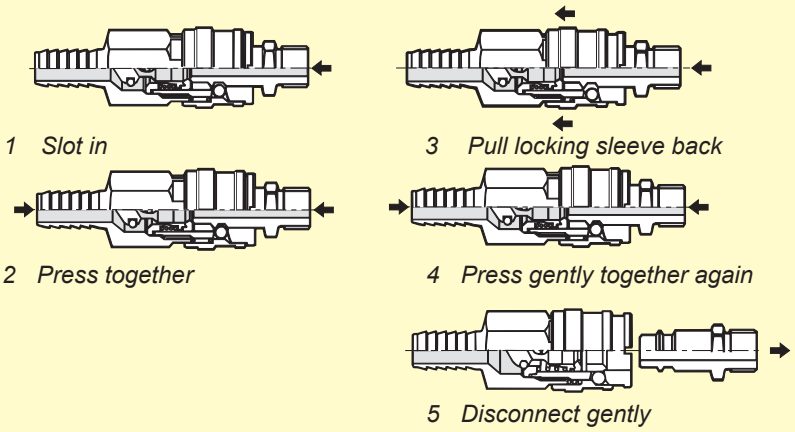

FLOW CHART. QIC 15ST M15 and NIP 15T F15

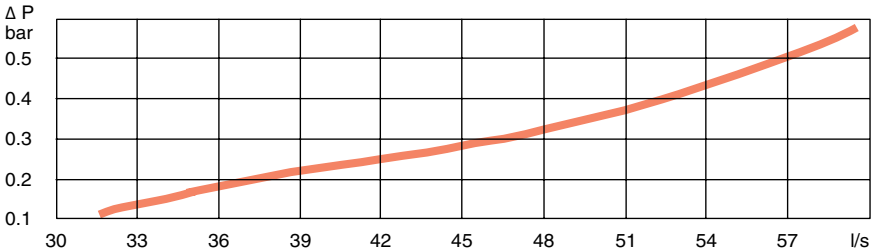

Air flow at an inlet pressure of 6 bar.

TECHNICAL DATA

Temperature range °C		Max. working pressure bar
min	max	
–20	+80	10

QIC 15ST and NIP 15T, 37 l/s (recommended air flow at 6 bar pressure)

Connection type	Coupling QIC 15ST	Ordering No.	Size mm	Size in
H – Hose 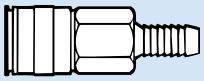	H10	8202 1306 00*	10	3/8
	H13	8202 1306 01*	12.5	1/2
	H16	8202 1306 02*	16	5/8
M – Male thread 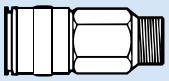	M08	8202 1306 10*	1/4 BSP	
	M10	8202 1306 11*	3/8 BSP	
	M15	8202 1306 12*	1/2 BSP	
F – Female thread 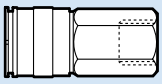	F15	8202 1306 21*	1/2 BSP	

Connection type	Nipple NIP 15T	Ordering No.	Size mm	Size in
H – Hose	H06	8202 1254 00*	6.3	1/4
	H08	8202 1254 05*	8	5/16
	H10	8202 1254 10*	10	3/8
	H13	8202 1254 15*	12.5	1/2
	H16	8202 1254 20*	16	5/8
M – Male thread 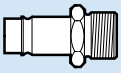	M10	8202 1254 25*	3/8" BSP	
	M15	8202 1254 30*	1/2" BSP	
MT – Male taper thread 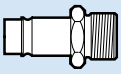	MT08	8202 1254 35*	1/4" BSPT	
	MT10	8202 1254 40*	3/8" BSPT	
	MT15	8202 1254 45*	1/2" BSPT	
F – Female thread 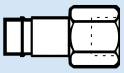	F08	8202 1254 50*	1/4" BSP	
	F10	8202 1254 55*	3/8" BSP	
	F15	8202 1254 60*	1/2" BSP	

* Available directly from stock.

QUICK COUPLINGS

QIC 15

QIC couplings are the traditional but sure answer when hoses have to be changed from one air tool to another or for making fast connections to an air outlet. The small size of the QIC couplings makes them easy and convenient to work with in combination with air tools.

Interchangeability:
Interchangeable with TEMA series 1750 and Rectus series 34.

FLOW CHART. QIC 15 M15 and NIP 15 F15

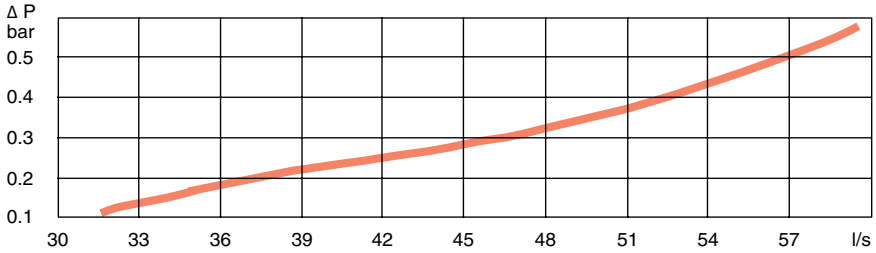

Air flow at an inlet pressure of 6 bar.

OIC 15 and NIP 15

TECHNICAL DATA

Temperature range °C		Max. working pressure bar
min	max	
–20	+80	10

QIC 15 and NIP 15, 37 l/s (recommended air flow at 6 bar pressure)

Connection type	Coupling QIC 15	Ordering No.	Size mm	Size in	Connection type	Nipple NIP 15	Ordering No.	Size mm	Size in
H – Hose 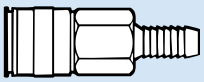	H10 H13 H16	8202 1304 00* 8202 1304 18* 8202 1304 26*	10 12.5 16	3/8 1/2 5/8	**H** – Hose 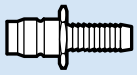	H06 H08 H10 H13 H16	8202 1251 03* 8202 1252 28* 8202 1251 11* 8202 1251 29* 8202 1251 37*	6.3 8 10 12.5 16	1/4 5/16 3/8 1/2 5/8
					SH – Safety Hose[a] 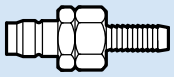	SH10 SH13 SH16	8202 1203 44* 8202 1203 51* 8202 1203 69*	10 12.5 16	3/8 1/2 5/8
M – Male thread 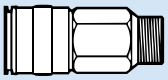	M08 M10 M15	8202 1304 34* 8202 1304 42* 8202 1304 59*	1/4 BSP 3/8 BSP 1/2 BSP		**M** – Male thread 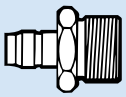	M10 M15	8202 1251 45* 8202 1251 52*	3/8 BSP 1/2 BSP	
					MT – Male taper thread 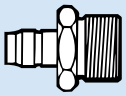	MT08 MT10 MT15	8202 1251 60* 8202 1251 78* 8202 1251 86*	1/4 BSPT 3/8 BSPT 1/2 BSPT	
F – Female thread 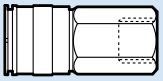	F15	8202 1304 67*	1/2 BSP		**F** – Female thread 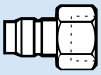	F08 F10 F15	8202 1251 94* 8202 1252 02* 8202 1252 10*	1/4 BSP 3/8 BSP 1/2 BSP	

[a] For hoses longer than 3 metres.

* Available directly from stock.

CLAW COUPLINGS

CLAW couplings made of dropforged, hardened steel which can withstand rough treatment and ensures a long life even under difficult conditions. The coupling head is the same for all sizes, which can therefore be freely combined.

The recommended maximum working pressure is 10 bar.

- **Large bore** – machined surfaces give low air resistance and minimum pressure drop.
- **Robust claws** – withstand rough handling without deformation.
- **Locking lugs** – precision-made to provide a reliable lock.
- **Special rubber packings** – resistant to oil and temperature changes. Max temperature 80°C (176°F).
- **Packing seats** – lathe-turned grooves ensure a leak-proof seal.
- Couplings are zinc-plated and thus effectively treated against corrosion.

FLOW CHART. For 2 pieces of CLAW

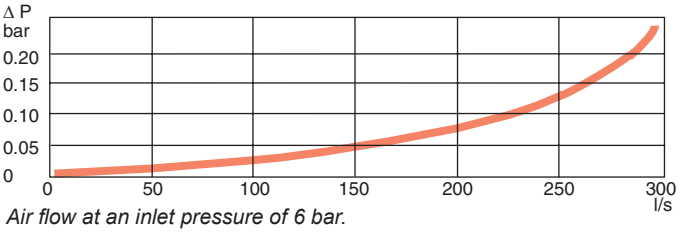

Air flow at an inlet pressure of 6 bar.

ORDERING INFORMATION

The coupling head is the same for all sizes, which can therefore be freely combined. One packing is required for each coupling.

Improved working safety

1. The LNH-type (CLAW coupling with lock nut) will always give a safe locking. Use one LNH coupling with either H, M or F type of coupling

   OR

2. Use safety lock spring for safe locking of H, M and F type.

For each pair of couplings one safe lock spring is required.

CLAW

Connection type		Coupling CLAW	Ordering No.	Size mm	Size in	Bore B, mm
H – Hose	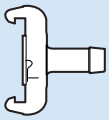	H06	9000 0308 00*	6.3	1/4	5.0
		H10	9000 0309 00*	10	3/8	8.0
		H13	9000 0310 00*	12.5	1/2	10.5
		H16	9000 0311 00*	16	5/8	13.5
		H20	9000 0312 00*	19	3/4	17.0
		H25	9000 0313 00*	25	1	22.0
LNH – Lock nut, Hose	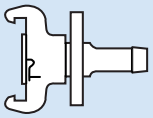	LNH10	9000 0260 00*	10	3/8	8.0
		LNH13	9000 0261 00*	12.5	1/2	10.5
		LNH16	9000 0262 00*	16	5/8	13.5
		LNH20	9000 0263 00*	19	3/4	17.2
		LNH25	9000 0264 00*	25	1	22.0
M – Male thread	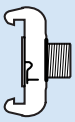	M10	9000 0300 00*	3/8	BSP	11.2
		M15	9000 0301 00*	1/2	BSP	14.8
		M20	9000 0302 00*	3/4	BSP	19.0
		M25	9000 0303 00*	1	BSP	25.5
F – Female thread	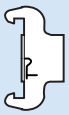	F10	9000 0304 00*	3/8	BSP	15.0
		F15	9000 0305 00*	1/2	BSP	18.6
		F20	9000 0306 00*	3/4	BSP	24.0
		F25	9000 0307 00*	1	BSP	25.0
Protection cover for CLAW couplings	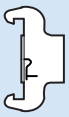		9000 0314 00*			
Extra packing for CLAW couplings		For type H, M and F	9000 0000 00* (+80°C), 9000 0000 01* (+200°C)[a]			
		For LNH10, -13 and -16	9000 0015 00*			
		For LNH20 and -25	9000 0268 00* (+80°C), 9000 0319 00 (+200°C)[a]			
Safety lock spring	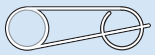		3176 8640 90	25 pieces		

[a] Viton-green.

* Available directly from stock.

FITTINGS

SIMPLE PRESSURE CLAMPS FOR PVC HOSES

For CABLAIR	For PVC	One-lugged steel clamp mm	Ordering No.
–	–	5.2- 6.2	0347 0122 18*
–	–	5.9- 7.0	0347 0122 19*
–	03	7.0- 8.5	0347 0122 05*
06	05	8.5-10.0	0347 0122 06*
08	06	9.8-11.8	0347 0122 07*
–	08	11.3-13.3	0347 0122 08*
10	–	12.8-14.8	0347 0122 09*
–	10	14.6-16.8	0347 0122 10*
13	–	16.5-18.8	0347 0122 11*
–	13	18.0-20.3	0347 0122 12*
16	–	20.2-22.8	0347 0122 13*
–	–	22.0-24.8	0347 0122 14*
20	–	23.3-26.3	0347 0122 15*
–	–	26.5-30.0	0347 0122 16*
25	–	29.8-33.1	0347 0122 22*

MEDIUM PRESSURE CLAMPS FOR PVC HOSES

For CABLAIR	For PVC, POLUR	Medium clamp worm drive mm	Ordering No.
–	–	8.0-14.0	0347 6102 00*
–	08	11.0-17.0	0347 6103 00*
–	10	11.0-17.0	0347 6103 00*
–	–	13.0-20.0	0347 6104 00*
16	13	15.0-24.0	0347 6105 00*
20	16	19.0-28.0	0347 6106 00*
–	20	22.0-32.0	0347 6107 00*
25	25	26.0-38.0	0347 6109 00*
–	–	32.0-44.0	0347 6111 00*
–	–	38.0-50.0	0347 6112 00
–	–	50.0-65.0	0347 6113 00*

MEDIUM PRESSURE CLAMPS FOR RUBBER HOSES

For TURBO	For RUBAIR	Medium clamp worm drive mm	Ordering No.
–	06	11.0-17.0	0347 6103 00*
13	10	13.0-20.0	0347 6104 00*
16	13	15.0-24.0	0347 6105 00*
–	16	19.0-28.0	0347 6106 00*
20	–	22.0-32.0	0347 6107 00*
–	20	26.0-38.0	0347 6109 00*

HEAVY-DUTY PRESSURE CLAMPS FOR RUBBER HOSES

For TURBO	For RUBAIR	Heavy-duty clamp mm	Ordering No.
–	–	22.0-25.0	9000 0194 00*
20	16	25.0-28.0	9000 0195 00*
–	20	29.0-32.0	9000 0196 00*
–	25	34.0-38.0	9000 0197 00*

HOSE CONNECTION

Male thread – hose nipple

Thread in	Hose size mm	Hose size in	Ordering No.
1/8 BSP	3.2	1/8	9000 0523 00*
1/8 BSPT	5	3/16	4010 0031 00*
1/8 BSPT	6.3	1/4	9000 0240 00*
1/4 BSP	3.2	1/8	9000 0524 00*
1/4 BSPT	6.3	1/4	9000 0241 00*
1/4 BSPT	8	5/16	9090 1715 00*
1/4 BSPT	10	3/8	9000 0247 00*
3/8 BSPT	10	3/8	9000 0242 00*
3/8 BSPT	12.5	1/2	9000 0248 00*
1/2 BSPT	12.5	1/2	9000 0243 00*
1/2 BSPT	16	5/8	9000 0244 00*
1/2 BSPT	20	3/4	4150 0429 00*
3/4 BSPT	20	3/4	9000 0245 00*
1 BSPT	25	1	9000 0246 00*

GASKETS

For couplings with male parallel thread	Fibre gasket between material and nipple Ordering No.
M5	0657 5710 00*
1/8" BSP	0657 5742 00*
1/4" BSP	0657 5764 00*
3/8" BSP	0657 5785 00*
1/2" BSP	0653 0500 01*
3/4" BSP	0657 5823 00*
1" BSP	0657 5830 00*

* Available directly from stock.

FITTINGS

REDUCING NIPPLE

In brass

Female thread in	Male thread in	Ordering No.
1/4 BSP	1/8 BSP	9721 4000 94*
3/8 BSP	1/4 BSP	9721 4000 92*
1/2 BSP	3/8 BSP	9721 4000 93*

BUSHING

Male thread – female thread

Male thread in	Female thread in	Ordering No.
1/4 BSP	1/8 BSP	9090 0799 00*
3/8 BSP	1/4 BSP	9090 0798 00*
1/2 BSP	1/4 BSP	9090 1469 00*
1/2 BSP	3/8 BSP	9090 0797 00*
3/4 BSP	1/2 BSP	9090 0796 00*
1 BSPT	3/4 BSP	9090 0795 00*

SWIVELS

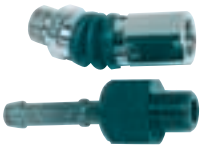

Recommended flow max 10 l/s

Air inlet	Air outlet Male BSP	Max Swivel bend from centre line	Ordering No.
1/4 BSP[a]	1/4	45°	4210 3135 00*
5/16" hose	1/4	30°	4210 3134 80*

[a] Female thread. * Available directly from stock.

HOSE CONNECTION WITH CLAMP NUT AND SPRING GUARD

1 Clamp nut, brass.

Hose diameter Outside/Inside mm	Male thread in	Ordering No.
10/8[a]	1/4 BSP	9721 4002 89*
10/8[a]	3/8 BSP	9721 4002 90*
12/9	1/4 BSP	9721 4000 86
12/10[b]	3/8 BSP	9721 4000 88
15/12.5[c]	1/2 BSP	9721 4000 89*

Male threaded hose nipple with clamp nut should be used with female threaded quick couplings.

DOUBLE CONNECTION

Male taper thread – male taper thread

From thread in	To thread in	Ordering No.
1/8 BSPT	1/8 BSPT	9090 0100 00*
1/8 BSPT	1/4 BSPT	9090 0110 00*
1/4 BSPT	1/4 BSPT	9090 0120 00*
1/4 BSPT	3/8 BSPT	9090 0130 00*
3/8 BSPT	3/8 BSPT	9090 0140 00*
3/8 BSPT	1/2 BSPT	9090 0150 00*
1/2 BSPT	1/2 BSPT	9090 0160 00*
1/2 BSPT	3/4 BSPT	9090 0170 00*
3/4 BSPT	3/4 BSPT	9090 0180 00*
3/4 BSPT	1 BSPT	9090 0190 00*
1 BSPT	1 BSPT	9090 0200 00*

2 Spring guard in steel.

Hose diameter Outside/Inside mm	Ordering No.
10/8[a]	9721 4002 88*
12/10[b]	9721 4000 91
15/12[c]	9721 4002 85*

The spring guard should be used with the clamp nut above.

[a] CABLAIR 08 [b] CABLAIR 10 [c] CABLAIR 13

DOUBLE ADJUSTABLE CONNECTION

Male thread – male thread

From thread in	To thread in	Ordering No.
1/2 BSP	1/2 BSP	9090 0806 00*

SEALING RINGS FOR DOUBLE ADJUSTABLE CONNECTION

For coupling with male thread in	Rubber spare sealing ring for adjustable connections Ordering No.
1/2 BSP	9090 0884 00*
1 BSP	9090 0886 00*

* Available directly from stock.

BLOW PROTECTOR
BLOCK

When a fitting comes loose from a pressurized hose, the hose starts blowing compressed air in an uncontrolled way. The blow protector shuts off the airflow and thus minimizes the risk of personal injuries and any damage of the workpiece and surrounding.

The selection parameters are the air pressure and the air flow. For proper function the air pressure should be set on 7 bar in order to reach 6 bar at the air tool. The air flow is determined by the air consumption of the tool and the hose length.

When working **with impact wrenches and pulse tools** care must be taken in the choice of blow protector. **The value of air flow under full load must be increased by 50% when selecting blow protector** of impact wrenches and pulse tools as there will otherwise be a risk for shut-off at free running.

BLOCK has automatic reset. When the air is switched on again the valve in BLOCK opens and is automatically reset.

Selection from the tables; There are two tables below, the first is for choosing a blow protector for standard hoses, the other for choosing a blow protector for spiral hoses and hose balancers.

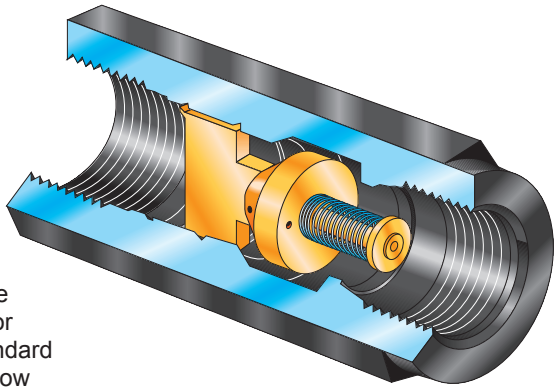

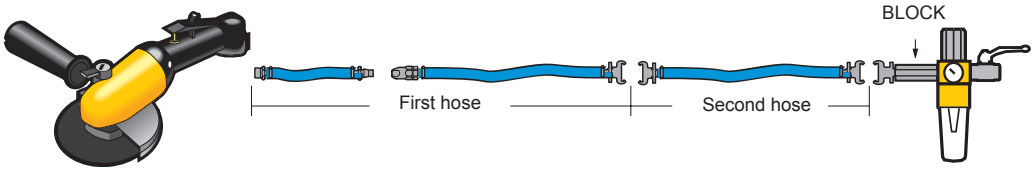

Selecting table using standard hoses

The air flow, hose length and hose sizes must all be within the recommended range in order to choose the right model of blow protector. The second hose is only used when hoses longer than 20 m are used. The second hose will always be 20 m and the first hose will be cut to the right length.

Use couplings in your installation with high air flow capacity such as QIC 10, QIC 10S (SE), QIC 15, QIC 15S (SE, ST), ErgoQIC 08, ErgoQIC 10 and CLAW or simular couplings to ensure proper use of the blow protector.

Air flow air tool l/s	First hose length m	First hose size mm	Second hose length m	Second hose size mm	Shut off air flow l/s	Product	Female thread BSP in	Ordering No.
0- 5	1- 5	6.3	0	–	7.8	BLOCK 08L	1/4	8202 0100 50*
0- 5	6-10	8	0	–	13	BLOCK 08H	1/4	8202 0100 52*
0- 8	1- 5	8	0	–	13	BLOCK 08H	1/4	8202 0100 52*
0- 8	6-10	10	0	–	13	BLOCK 08H	1/4	8202 0100 52*
0-10	1-10	10	0	–	13	BLOCK 08H	1/4	8202 0100 52*
0-10	11-20	12.5	0	–	13	BLOCK 08H	1/4	8202 0100 52*
0-14	1- 5	10	0	–	18	BLOCK 10L	3/8	8202 0100 54*
0-14	6-10	13	0	–	18	BLOCK 10L	3/8	8202 0100 54*
0-15	11-20	16	0	–	32	BLOCK 10H	3/8	8202 0100 56*
0-25	1- 5	12.5	0	–	32	BLOCK 10H	3/8	8202 0100 56*
0-25	6-10	16	0	–	32	BLOCK 10H	3/8	8202 0100 56*
0-35	1- 5	12.5	0	–	45	BLOCK 15H	1/2	8202 0100 58*
0-35	6-10	16	0	–	45	BLOCK 15H	1/2	8202 0100 58*
0-35	11-20	19	0	–	45	BLOCK 15H	1/2	8202 0100 58*
0-60	1-10	19	0	–	75	BLOCK 20H	3/4	8202 0100 60*
0-60	1-10	19	20	25	75	BLOCK 20H	3/4	8202 0100 60*
0-70	1- 7	19	0	25	86	BLOCK 25H	1	8202 0100 62*
0-70	8-20	25	0	25	86	BLOCK 25H	1	8202 0100 62*
0-70	1-20	25	20	25	86	BLOCK 25H	1	8202 0100 62*

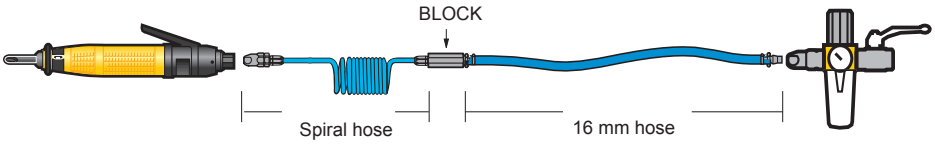

Selection table when using spiral hoses and hose balancers

The airflow, spiral hose and hose balancer must all be within recommended range in order to choose the right model of the blow protector BLOCK.

The second hose, only used when needed, is a 16 mm normal hose with a maximum length of 5 metre. The second hose shall be placed between BLOCK and FRI, unit.

Air flow air tool l/s	Model	Spiral hose or balancer Hose length m	Spiral hose or balancer Hose size mm	Shut off air flow l/s	Product	Female thread BSP in	Ordering No.
0- 4	SPI 06-3	2.5	6	8.3	BLOCK 08L	1/4	8202 0100 50*
0- 6	HRIL 3	1.4	–	8.3	BLOCK 08L	1/4	8202 0100 50*
0- 6	SPI 1S	2.0	6	8.3	BLOCK 08L	1/4	8202 0100 50*
0- 6	SPI 2L	6.0	8	8.3	BLOCK 08L	1/4	8202 0100 50*
0- 8	HRIL 4	1.1	–	14	BLOCK 08H	1/4	8202 0100 52*
0- 8	SPI 09-3	2.5	9	14	BLOCK 08H	1/4	8202 0100 52*
0- 8	SPI 2M	4.0	8	14	BLOCK 08H	1/4	8202 0100 52*
0-11	SPI 2S	3.0	8	14	BLOCK 08H	1/4	8202 0100 52*
0-11	SPI 2L	6.0	11	14	BLOCK 08H	1/4	8202 0100 52*
0-15	SPI 3M	4.0	11	19	BLOCK 10L	3/8	8202 0100 54*
0-20	SPI 3S	3.0	11	32	BLOCK 10H	3/8	8202 0100 56*

* Available directly from stock.

CABLAIR HOSES

Superlight flexible PVC-hose

CABLAIR is made of high-strength, high-performance PVC-material in combination with optimum braid angle polyester-reinforced fibres. CABLAIR can withstand the same pressures and temperatures as standard hoses. CABLAIR is recommended for indoor use.

- **Low weight** – Extremely low weight, 30-50% less than conventional hoses – in combination with low-weight tools this makes an ideal ergonomic solution.
- **Soft and flexible** – Extremely flexible – softer than ordinary PVC-hoses.
- **Easy to handle** – supplied in 30 metre coils wrapped in shrink film.
- **Working temperature** –25°C to +60°C.
- **Inside diameter** according to ISO 4397.
- **Patents pending.**
- **Blue colour** – The international identification colour for compressed air.

Complete hose sets, see installation proposals page 290-298.

CABLAIR hose

Model	Hose inside dia mm	Hose inside dia in	Hose outside dia mm	Max working pressure[a] bar	Max rec. air flow[b] l/s	Weight per 30 m coil kg	Ordering No.
CABLAIR 06	6.3	1/4	9	18	4	1.2	9093 0035 11*
CABLAIR 08	8	5/16	10.5	18	7.5	1.7	9093 0035 41*
CABLAIR 10	10	3/8	13	14	13	2.1	9093 0035 71*
CABLAIR 13	12.5	1/2	16.5	13	21	3.0	9093 0036 01*
CABLAIR 16	16	5/8	21	11	43	5.4	9093 0036 31
CABLAIR 20	19	3/4	24	11	75	5.8	9093 0036 61
CABLAIR 25	25	1	31	10	125	10.4	9093 0036 91

[a] With a safety factor of 3 at 20°C (at the max temp of +60°C the working pressure should be reduced by 50%).
[b] The pressure drop will be 0.2 bar on a hose length of 5 m, including 2 nipples and at an inlet pressure of 7 bar.
[c] PVC 05 – 100 m, Ordering No. 8202 0501 05.
[d] PVC 06 – ESD, Ordering No. 8202 0501 06.
[e] PVC 10 – ESD, Ordering No. 8202 0501 10.

* Available directly from stock.

PVC HOSES

Strong for heavy-duty applications

The PVC hose has high resistance to abrasion, which makes it the ideal hose for tough working conditions such as workshops, factories, garages, etc. It is mainly recommended for indoor use.

The PVC hose is available in 9 diameters ranging from 3 mm to 25 mm (1/8" to 1" inside diameter) to suit a wide variety of fittings.

- **Transparent** – facilitates inspection.
- **Pliable** – easily follows working movements.
- **Long service life.**
- **Inside diameter** according to ISO 4397.
- **Working temperature** between –25°C and +60°C.
- **Easy to handle** – supplied in 30 metre coils.
- **Blue colour** – The international identification colour for compressed air.

The PVC hose can also be used in many other fields to carry fluids.

Complete hose sets, see installation proposals page 290-298.

PVC hose

Model	Hose inside dia mm	Hose inside dia in	Hose outside dia mm	Max working pressure[a] bar	Max rec. air flow[b] l/s	Weight per 30 m coil kg	Ordering No.
PVC 03	3.2	1/8	7	20	0.7	1.4	9093 0037 21
PVC 05[c]	5	3/16	9	18	2.1	1.9	9093 0037 51
PVC 06[d]	6.3	1/4	11	18	4	2.5	9093 0037 81*
PVC 08	8	5/16	12	18	7.5	2.9	9093 0038 11*
PVC 10[e]	10	3/8	14	14	13	3.7	9093 0038 41*
PVC 13	12.5	1/2	18	13	21	5.9	9093 0038 71*
PVC 16	16	5/8	22	12	43	7.2	9093 0039 01*
PVC 20	19	3/4	25	12	75	8.3	9093 0039 31
PVC 25	25	1	32	11	125	12.5	9093 0039 61

TURBO – RUBBER HOSE

Super-light flexible rubber hose

TURBO is recommended for indoor and outdoor use.

- **The ideal hose for a wide variety of applications, such as foundries, shipyards, engineering workshops as well as on construction sites.**
- **Supplied in 20 metre coils wrapped in shrink film.**
- **Extremely low weight**, 30-40% less than conventional rubber hoses.
- **Soft and flexible** – Extremely flexible, softer than ordinary rubber hoses.
- **The hose is antistatic.**
- **Working temperature** between –40°C and +90°C.

TURBO rubber hose

Model	Hose inside dia mm	Hose inside dia in	Hose outside dia mm	Max working pressure[a] bar	Max rec. air flow[b] l/s	Weight per 20 m coil kg	Ordering No.
TURBO 13	12.5	1/2	18.6	16	21	3.9	9093 0057 91*
TURBO 16	16.5	5/8	22.5	16	43	4.8	9093 0057 31*
TURBO 20	20.1	3/4	26.1	16	75	5.4	9093 0057 61*

[a] With a safety factor of 4 at 20°C.

* Available directly from stock.

[b] The pressure drop will be 0.2 bar on a hose length of 5 m, including 2 nipples and at an inlet pressure of 7 bar.

RUBAIR – RUBBER HOSE

A double reinforced strong hose

RUBAIR is a special developed rubber hose for compressed hand-held air tools. The hose fulfils all general heavy duty demands. RUBAIR is recommended for indoor and outdoor applications e.g. in foundries, shipyards, engineering workshops as well as on construction sites. The wall thickness is thin which makes RUBAIR light and flexible to work with.

- **Double-reinforced** makes it extra strong and tough.
- **Durable** – for rugged environmental conditions.
- **The hose is antistatic.**
- **Supplied in 20 metre coils wrapped in shrink film.**
- Long service life.
- **Working temperature** between –40°C and +90°C.
- **Inside diameter** according to ISO 4397.

RUBAIR rubber hose

Model	Hose inside dia mm	Hose inside dia in	Hose outside dia mm	Max working pressure[a] bar	Max rec. air flow[b] l/s	Weight per 20 m coil kg	Ordering No.
RUBAIR 06	6.3	1/4	11.3	16	4	2.0	8202 0401 06*
RUBAIR 10	10	3/8	16.0	16	13	3.6	8202 0402 10*
RUBAIR 13	12.5	1/2	19.1	16	21	4.7	8202 0403 13*
RUBAIR 16	16	5/8	23.0	16	43	6.1	8202 0404 16*
RUBAIR 20	20	3/4	26.6	16	75	7.8	8202 0405 20*
RUBAIR 25	25	1	34.0	16	125	11.8	8202 0406 25*

[a] With a safety factor of 5 at 20°C.

* Available directly from stock.

[b] The pressure drop will be 0.2 bar on a hose length of 5 m, including 2 nipples and at an inlet pressure of 7 bar.

POLUR – POLYURETHANE, the most environmental friendly solution

POLUR has high resistance to abrasion. The hose is oil-resistant. POLUR has a much longer lifetime compared with PVC hoses. The polyurethane hose is an ideal hose in tough working conditions such as workshops, factories, garages, shipyards and construction sites. The POLUR is recommended for indoor and outdoor applications. The POLUR is very flexible and it keeps its flexibility even when working at minus degrees. The hose will, when stressed, always retract to its normal shape and keeps its performance during its entire life.

- **Working temperature** between –30° C to +80° C.
- **Easy to handle** – supplied in 25 m coils.
- **Hardness** – 68/90 Shore A.
- Tested according to ISO 1402.

POLUR polyurethane hose

Model	Hose inside dia mm	Hose inside dia in	Hose outside dia mm	Max working pressure[a] bar	Max rec. air flow[b] l/s	Weight per 25 m coil kg	Ordering No.
POLUR 08	8	5/16	12	20	7.5	2.2	8202 0601 08*
POLUR 10	10	3/8	14	16	13	2.5	8202 0602 10*
POLUR 13	13	1/2	18	13	21	4.0	8202 0603 13*

[a] With a safety factor of 3 at 20°C (at the max temp of +60°C the working pressure should be reduced by 50%).

[b] The pressure drop will be 0.2 bar on a hose length of 5 m, including 2 nipples and at an inlet pressure of 7 bar.

* Available directly from stock.

SPIRAL HOSES

SPIRAL HOSES – SPI

The elastic hose for vertical and horizontal applications

The SPI elastic spiral hose is ideal for air tools used at varying distances from a fixed air outlet. It is easily stretched and retracts immediately when released. As the hose is flexible, the two smallest sizes can be connected directly to the tool.

When used with hand tools, self-storage principle ensures that the hose is kept off the floor and out of the way of the operator. This boosts productivity and reduces the accident hazard. The SPI is the ideal hose in combination with a balancer.

- **Self-retractable.**
- **Safer** – Makes the worksite safer and congenial.
- **Easy to install** – SPI hose is supplied complete with connections and is thus very easy to install.

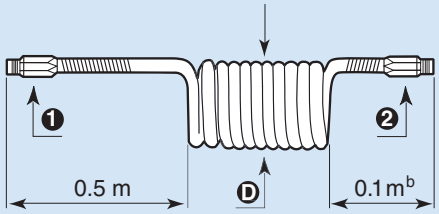

Model	Hose inside dia mm	Hose outside dia mm	Max rec. air flow[a] l/s	Working range rec. m	Working range max m	Max spiral dia Ⓓ mm	Male threads in BSP ❶	Male threads in BSP ❷	Ordering No.
SPI 1SP-S[c]	6.5	10	7	< 2.0	2.5	45	1/4	1/4	8202 0508 70*
SPI 1SP-M[c]	6.5	10	5	< 4.0	4.5	45	1/4	1/4	8202 0508 72*
SPI 2SP-S[c]	8	12	13	< 2.0	2.5	50	3/8	3/8	8202 0508 74*
SPI 2SP-M[c]	8	12	10	< 4.0	4.5	50	3/8	3/8	8202 0508 76*
SPI 2SP-L[c]	8	12	9	< 6.0	7.0	50	3/8	3/8	8202 0508 78*
SPI 2SP-XL[c]	8	12	6	< 8.0	9.0	50	3/8	3/8	8202 0508 80*
SPI 3SP-S	11	16	25	< 2.0	2.5	80	3/8	3/8	8202 0508 82*
SPI 3SP-M	11	16	22	< 4.0	4.5	80	3/8	3/8	8202 0508 84*
SPI 3SP-L	11	16	17	< 6.0	7.0	80	3/8	3/8	8202 0508 86*
SPI 3SP-XL	11	16	13	< 8.0	9.0	80	3/8	3/8	8202 0508 88*
SPI 4SP-XXL	13	19	25	<10.0	11.0	85	3/8	3/8	8202 0508 90*

[a] At inlet pressure 6 bar and pressure drop 0.5 bar.
[b] 0.5 m for SPI 4SP-XXL.
[c] With spring guard at hose ends.

* Available directly from stock.

OPTIONAL ACCESSORIES

Extra fittings

Description	Ordering No.
Spring guard and fittings for SPI 1SP	9090 2083 00*
Spring guard and fittings for SPI 2SP	9090 2084 00
Fittings for SPI 4SP	9090 2086 00

Reducing nipple – In brass

Female thread in	Male thread in	Ordering No.
1/4 BSP	1/8 BSP	9721 4000 94*
3/8 BSP	1/4 BSP	9721 4000 92*
1/2 BSP	3/8 BSP	9721 4000 93*

Reducing nipple – In brass

Bushing

Male thread in	Female thread in	Ordering No.
1/4 BSP	1/8 BSP	9090 0799 00*
3/8 BSP	1/4 BSP	9090 0798 00*
1/2 BSP	1/4 BSP	9090 1469 00*
1/2 BSP	3/8 BSP	9090 0797 00*
3/4 BSP	1/2 BSP	9090 0796 00*
1 BSPT	3/4 BSP	9090 0795 00*

Bushing

For more fittings see page 275-276.

* Available directly from stock.

BLOW GUNS

ErgoGUN 2602

ErgoGUN is a hard-wearing and user-friendly blow gun for all applications. Its ergonomic design is suitable for both right and left-handed users, which ensures more flexible operation. The plastic body offers flexibility in handling, insulates against cold, and reduces the risk of scratches to work surfaces. The star-tip design of the blow tube reduces noise levels.

- ErgoGUN has a special design for enhanced blow force, more than 20% higher than our old top performing conventional blow gun.
- Light and rugged construction.
- Insulated and ergonomic handle with safe grip, with the ergonomic grooves. The new handle and grooves ensure relaxed handling and avoid cold hands.
- Low noise level with the new design together with the star-tip (< 79 dB(A)).
- The “star-tip” nozzle reduces the danger of high pressure air coming in direct contact with the skin. In this way ErgoGUN 2602 meets the U:S: OSHA standard which specifies a maximum of 2 bar in case of direct contact.
- High flow rate, up to 510 l/min[a] at 6 bar.
- Shock and impact proof and resistant against solvents – for all applications.
- Excellent throttling properties, that give precise regulation of flow and pressure.
- Wide range of options are possible, due to exchangeable nozzles.
- Highest quality and reliability.
- High performance recyclable POM material.
- Max working pressure 16 bar (232 PSI).
- Max burst pressure: 64 bar (928 PSI).
- Connection 1/4" female thread.

- Temperature range: -20ºC to +60ºC (-4ºF to +140ºF).

GUN

For safer and more efficient cleaning.

The Atlas Copco blow gun GUN is available in different models.

- **GUN F06A** – the blow gun without safety nozzle.
- **GUN F06A-S** – with a safety nozzle.
- **GUN F06A-SS** – with a combined safety/silencer nozzle.

The safety nozzle reduces the danger of high pressure air coming into direct contact with the skin.

The safety nozzle deflect the air sideways if the forward air flow is blocked. In this way they meet the U.S. OSHA standard which specifies a maximum of 2 bar in case of direct contact.

The combined safety/silencer nozzle also greatly reduces the noise caused by the air current.

- For cleaning operations.
- Sturdy design with a light ergonomic and convenient pistol-grip. The trigger mechanism allows you to vary the air flow to suit the job you are doing.
- Max working pressure 10 bar.
- Max working temperature +50ºC.
- Internal connecting thread 1/4" BSP.

[a] More than 20% higher than our old top performing conventional blow gun. The values are for a gun without star-tip. With the star-tip nozzle the flow is 190 l/s.

Model	Back pressure at 6 bar when the nozzle is blocked bar	Blow force N	Sound level at 6 bar dB(A)	Air flow l/s	Weight kg	Weight lb	Ordering No.
GUN F06A-SS with safety/silencer nozzle	0.8	2	82	3.8	0.16	0.35	8202 1005 69*
GUN F06A-S with safety nozzle	0.8	4	90	7.0	0.15	0.33	8202 1005 51*
GUN F06A without nozzle	6	4	90	7.0	0.14	0.31	8202 1005 28*
ErgoGUN 2602	0.0	2.2	79	3.1	0.11	0.25	8202 1006 10*

* Available directly from stock.

ACCESSORIES FOR GUN F06

Designation	Ordering No.
Transparent guard	9090 1886 90*
Holder for suspension	9090 1808 80*
Hose nipple	9000 0241 00*
Safety/Silencer nozzle	9090 1809 81*

Transparent guard

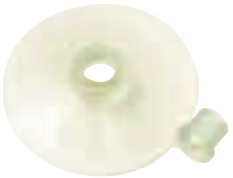

Holder for suspension

BALANCERS

COLIBRI BALANCERS

The Colibri Balancers are your help in increasing the productivity. The COL balancers make it possible to reduce the stress levels in the operators muscles, and makes it possible to always have the tool at the right position. The Colibri range – COL 1, 2, 3 and 4 – provides weightless suspension for loads from 0.7 up to 55 kg.

Colibri is a unique range of balancers. Colibri holds the load weightless throughout the entire cable length – at all levels, thanks to the unique counterpoised cones in the balancer which provide constant tension throughout the entire cable length.

The load is not pulled back when released and the environment is protected from accidental hoisting of the load.

Safety aspects are underscored through several built-in functions

- The cable locks in the event of spring failure (downward braking power). See also COL 2/3 S below.
- The cable locks if the load drops or if the cable breaks (upward braking power).
- In all models the braking function can be activated upwards by using the "bow and arrow" principle if you need to slacken the cable to change the load.
- For the large COL 4 balancers a separate activation Cable-Pullout mechanism is available, making it easy to hook on the load or to unload the balancer.
- The spring tension can easily be preset for COL 1, 2 and 3 by turning the adjustment wheel. Nothing more than an ordinary wrench is required for the large COL 4 balancers.

DIMENSIONS

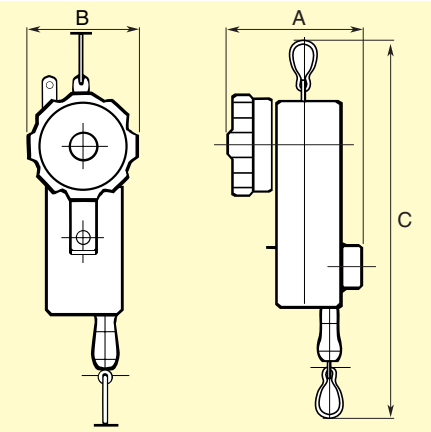

MANDATORY ACCESSORIES

Safety chain for	Ordering No.
COL 1	4391 4045 90
COL 2 and 3	4391 4046 90
COL 4	4391 4047 90

Colibri standard

Model	Capacity range kg	Capacity range lb	Cable length m	Weight kg	Weight lb	Dimensions A mm	Dimensions B mm	Dimensions C mm	Ordering No.
COL 1 01	0.7- 1.3	1.5- 2.9	1.7	0.5	1.1	108	72	245	8202 0750 01*
COL 1 01R	0.7- 1.3	1.5- 2.9	1.7	0.5	1.1	108	84	245	8202 0773 12
COL 1 02	1.0- 2.0	2.2- 4.4	1.7	0.5	1.1	108	72	245	8202 0750 19*
COL 1 02R	1.0- 2.0	2.2- 4.4	1.7	0.5	1.1	108	84	245	8202 0773 20
COL 2 03	1.7- 3.5	3.7- 7.7	2.4	2.3	5.1	155	116	427	8202 0750 27*
COL 2 04	3.0- 6.0	6.6- 13.2	2.4	2.3	5.1	155	116	427	8202 0750 35*
COL 2 05	4.7- 7.0	10.4- 15.4	2.4	2.5	5.5	155	116	427	8202 0750 43*
COL 3 07	5.5- 9.0	12.1- 19.8	2.4	3.3	7.3	196	116	427	8202 0750 50*
COL 3 10	8.0-13.0	17.6- 28.7	2.4	3.4	7.5	196	116	427	8202 0750 68*
COL 3 15	12.5-17.0	27.6- 37.5	2.4	3.8	8.4	196	116	427	8202 0750 76*
COL 4 18	14.0-22.0	30.9- 48.5	2.4	13.2	29.1	244	193	620	8202 0774 11*
COL 4 18P	14.0-22.0	30.9- 48.5	2.4	14.1	31.1	244	193	620	8202 0774 29
COL 4 22	17.0-28.0	37.4- 61.7	2.4	13.9	30.6	244	193	620	8202 0750 84*
COL 4 22P	17.0-28.0	37.4- 61.7	2.4	14.8	32.6	244	193	620	8202 0751 26
COL 4 30	24.0-38.0	52.9- 83.8	2.4	14.5	32.0	244	193	620	8202 0750 92*
COL 4 30P	24.0-38.0	52.9- 83.8	2.4	15.4	34.0	244	193	620	8202 0751 34
COL 4 42	36.0-49.0	79.4-107.8	2.4	14.9	32.8	244	193	620	8202 0751 00*
COL 4 42P	36.0-49.0	79.4-107.8	2.4	15.8	34.8	244	193	620	8202 0751 42
COL 4 50	43.0-55.0	98.4-121.3	2.4	15.3	33.7	244	193	620	8202 0751 18*
COL 4 50P	43.0-55.0	98.4-121.3	2.4	16.2	35.7	244	193	620	8202 0751 59

R = With indicator for fast weight adjustment. P = With pull-out mechanism.

Colibri with built-in extra safety brake

Model	Capacity range kg	Capacity range lb	Cable length m	Weight kg	Weight lb	Ordering No.
COL 2 03S	1.7- 3.5	3.7- 7.7	2.4	2.3	5.1	8202 0775 93*
COL 2 04S	3.0- 6.0	6.6-13.2	2.4	2.3	5.1	8202 0776 01*
COL 2 05S	4.7- 7.0	10.4-15.4	2.4	2.5	5.3	8202 0776 19*
COL 3 07S	5.5- 9.0	12.1-19.8	2.4	3.3	7.3	8202 0776 27*
COL 3 10S	8.0-13.0	17.6-28.7	2.4	3.4	7.5	8202 0776 35*
COL 3 15S	12.5-17.0	27.6-37.5	2.4	3.8	8.4	8202 0776 43*

* Available directly from stock.

COLIBRI WITH BUILT-IN EXTRA SAFETY BRAKE

The Colibri balancer is available in a model with built-in extra safety brake mechanism for applications with extremely high safety requirements.

BALANCERS

BALANCER – RIL

RIL balancers always keep the tool in place, handy and easily accessible. There are also many other advantages:

- **Flexible** with a wide range for loads from 0.0 kg to 107 kg.
- **Rugged** and very strongly made to withstand rough treatment.
- **High quality** spring for longer life length.
- **Adjustable wire stop** helps to obtain the most convenient height of the tool.
- **Required torque easily set,** by only one standard tool.

Types RIL 1C, 2C, 4C, 5C, 5, 10C, 15C and 22C are the small to medium-size balancers intended for small tools.

Types RIL 20, 30, 40, 50A, 60A, JA, KA and LA are larger heavy duty sizes intended for medium-size and large tools. They have a compact and sturdy design with high-tensile aluminium alloy casing. Worm gear adjustment provides the torque required. An automatic safety lock prevents load dropping in the event of a main spring failure. The wire rope drum can be locked at any position for ease and safety when changing tools or cable. Forged safety hooks at top and bottom.

RIL – Standard design

Model	Capacity range kg	Capacity range lb	Cable length m	Weight kg	Weight lb	Dimensions A mm	Dimensions B mm	Dimensions C mm	Ordering No.
RIL 1C	0.0- 0.5	0.0- 1.7	1.5	0.6	1.3	51	106	238	8202 0700 02*
RIL 2C	0.4- 1.0	0.9- 2.2	1.5	0.6	1.3	51	106	238	8202 0701 19*
RIL 4C	1.0- 2.0	2.2- 4.4	1.5	0.6	1.3	51	106	238	8202 0702 18*
RIL 5C	1.4- 2.3	3.1- 5.1	1.5	0.6	1.3	51	106	238	8202 0703 25*
RIL 5	0.4- 2.3	0.9- 5.1	2.4	2.0	4.4	70	157	308	8202 0703 09*
RIL 5LR[b]	0.4- 2.3	0.9- 5.1	2.4	2.0	4.4	70	157	308	8202 0703 15
RIL 10C	2.0- 5.0	4.4-11.0	2.4	2.7	6.0	84	190	369	8202 0704 16*
RIL 10CS[a]	2.0- 5.0	4.4-11.0	2.4	2.7	6.0	84	190	369	8202 0704 20*
RIL 15C	5.0- 7.0	11.0-15.4	2.4	3.2	7.1	84	190	369	8202 0705 15*
RIL 15CS[a]	5.0- 7.0	11.0-15.4	2.4	3.2	7.1	84	190	369	8202 0705 20*
RIL 20[a]	5.0- 9.0	15.4-19.8	1.8	7.2	15.9	178	203	495	8202 0707 05*
RIL 22C	6.0-10.0	13.2-22.0	2.4	3.2	7.1	84	190	369	8202 0706 14*
RIL 22CS[a]	6.0-10.0	13.2-22.0	2.4	3.2	7.1	84	190	369	8202 0706 20*
RIL 30[a]	9.0-14.0	19.8-30.9	1.8	7.2	15.9	178	203	495	8202 0708 04*
RIL 40[a]	13.0-18.0	28.7-39.7	1.8	7.2	15.9	178	203	495	8202 0709 03*
RIL 50A[a]	18.0-23.0	39.7-50.7	1.8	7.5	16.5	178	203	495	8202 0728 00*
RIL 60A[a]	23.0-30.0	50.7-56.7	1.8	7.5	16.5	178	203	495	8202 0729 09*

[a] Balancer equipped with automatic safety drum lock in case of spring failure.
[b] Contains a lock ratchet to lock the cable in increments along its entire length.

RIL – Extra robust design

Model	Capacity range kg	Capacity range lb	Cable length m	Weight kg	Weight lb	Dimensions A mm	Dimensions B mm	Dimensions C mm	Ordering No.
RIL 50JA[a]	18- 25	40- 55	2.1	15	33	191	305	711	8202 0713 07
RIL 60JA[a]	24- 29	53- 64	2.1	15	33	191	305	711	8202 0714 06
RIL 70JA[a]	24- 32	53- 71	2.1	15	33	191	305	711	8202 0715 05
RIL 80JA[a]	31- 39	68- 86	2.1	15	33	191	305	711	8202 0716 04
RIL 90JA[a]	36- 41	79- 90	2.1	15	33	191	305	711	8202 0717 03
RIL 100JA[a]	40- 45	88- 99	2.1	15	33	191	305	711	8202 0718 02
RIL 110KA[a]	38- 52	84-115	2.1	24	53	260	305	711	8202 0719 01
RIL 120KA[a]	52- 57	115-126	2.1	24	53	260	305	711	8202 0720 08
RIL 130KA[a]	56- 61	123-135	2.1	24	53	260	305	711	8202 0721 07
RIL 140KA[a]	61- 66	135-146	2.1	24	53	260	305	711	8202 0722 06
RIL 150KA[a]	65- 70	143-154	2.1	24	53	260	305	711	8202 0723 05
RIL 160KA[a]	70- 75	153-165	2.1	24	53	260	305	711	8202 0724 04
RIL 170KA[a]	72- 79	159-171	2.1	24	53	260	305	711	8202 0725 03
RIL 190KA[a]	79- 88	174-194	2.1	24	53	260	305	711	8202 0726 02
RIL 200KA[a]	86- 91	190-201	2.1	24	53	260	305	711	8202 0727 01
RIL 230LA[a]	95-107	209-236	2.1	37	82	359	292	711	8202 0731 05

[a] Balancer equipped with automatic safety drum lock in case of spring failure. * Available directly from stock.

DIMENSIONS

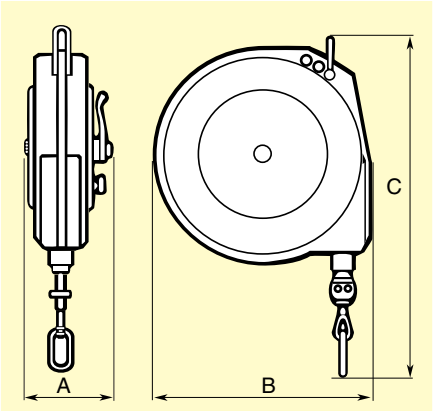

MANDATORY ACCESSORIES

Safety chain for	Ordering No.
1C, 2C, 4C and 5C	4391 4045 90
10C[a], 15C[a] and 22C[a]	4391 4156 00
5, 20, 30, 40	4391 4046 90
50A and 60A	4391 4047 90
JA, KA and LA	4390 1543 00

[a] Safety chain included.

HOSE REEL BALANCER – HRIL

The HRIL range of hose reel balancers are specifically designed for use with small pneumatic hand tools.

The integrated air hose and support cable ensures the work area is kept tidy and the tool is easy to control.

- **Ergonomics** – The retraction force over hose travel remains almost constant which minimizes load on the operator and ensures smooth operation.
- An easily adjusted rubber stop is fitted on the hose which allows the tool to be set at the optimum position.
- The retraction force is easily adjustable by means of a hand wheel on the rear casing (this can be removed if desired, once the retraction force is set).
- **Long service life** – The design features a rugged casing, self lubricating spindle bearing bushes and a 360 degrees rotary inlet connector.
- A durable hose is fitted with additional protection to prevent excessive bending around air connectors.
- **Low pressure drop** – The HRIL balancers have very good flow characteristics.

Model	Capacity range kg	Capacity range lb	Max rec. air flow[a] l/s	Hose travel m	Weight kg	Weight lb	Max working pressure bar	Dimensions A mm	Dimensions B mm	Dimensions C mm	Ordering No.
HRIL 1	0.2-0.5	0.4-1.1	3.5	1.2	1.2	2.6	10	92	132	173	8202 0600 03*
HRIL 3	0.5-1.4	1.1-3.1	5.5	1.0	1.2	2.6	10	92	132	173	8202 0600 11*
HRIL 4	0.7-2.0	1.5-4.4	6.5	1.0	1.4	3.1	10	92	132	173	8202 0600 29*

[a] At inlet pressure of 6 bar pressure drop is 0.4 bar.

Airline fittings

All models have a BSP 1/4" inlet fitting.
HRIL 1 supplied with M5 and BSP 1/8" outlet fittings.
HRIL 3 supplied with BSP 1/8" and BSP 1/4" outlet fittings.
HRIL 4 supplied with BSP 1/4" outlet fitting.

DIMENSIONS

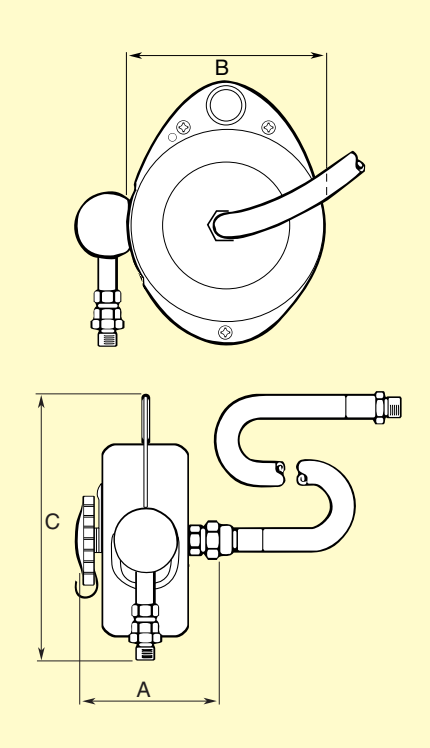

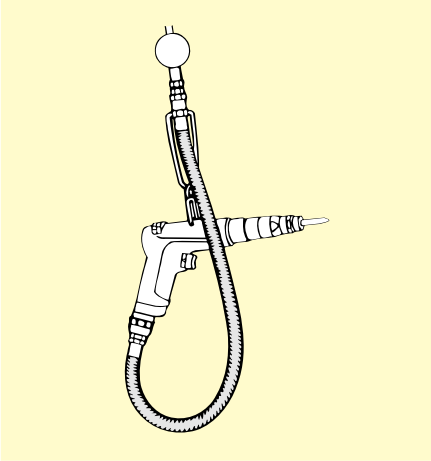

Conversion kit for air inlet from below.

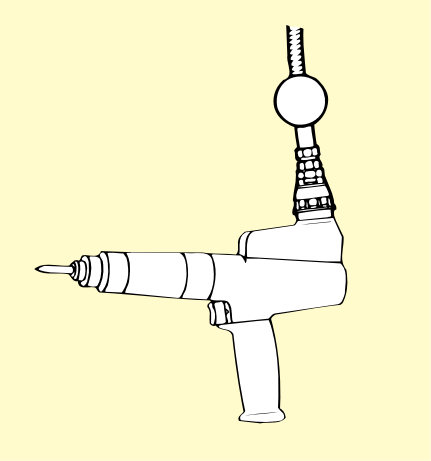

Air inlet from above.

OPTIONAL ACCESSORIES

Designation	Ordering No.
Conversion kit for air inlet from below, - HRIL 3, HRIL 4	4390 1687 90*

MANDATORY ACCESSORIES

Designation	Ordering No.
Safety chain	4391 4045 90*

* Available directly from stock.

HM LIGHT

The HM Light has a composite casing and a highly wear-resistant and flexible 100% PUR-Hose for handling air. The revolving hinge gives a choice between wall and ceiling mounting with no hoses on the floor to provide a safe, clean workshop environment.

- Revolving hinge enables flexible use from every angle.
- PUR-Hose is kink resistant even at the lowest temperatures.
- Working temperature: –30°C - +60°C.
- Max working pressure is 20 bar.

DIMENSIONS (mm)

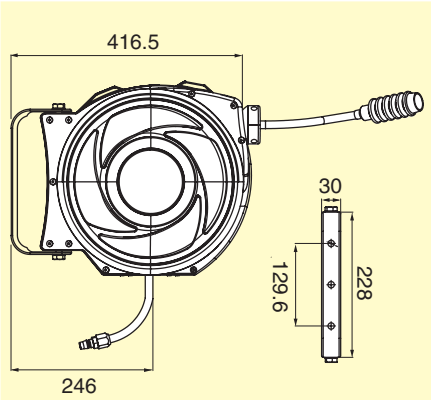

Model	Length m	Hose inside dia mm	Hose inside dia in	Connection distribution hose BSP	Air flow (at 1 bar pressure drop) l/s	Weight kg	Weight lb	Ordering No.
HM LIGHT	8	8	5/16	1/4", male thread	10	4.5	9.9	8202 1180 92
HM LIGHT	10	8	5/16	1/4", male thread	9	4.5	9.9	8202 1180 91

HM FLEX and HM FLEX Grinding

The HM FLEX Grinding has a compact steel casing and a spatter-resistant thermoplastic rubber/PU-Hose for handling air. Available on both models, a revolving hinge gives a choice between wall and ceiling mounting with no hoses on the floor, providing a safe and clean workshop environment.

The HM Flex has a compact steel casing and a highly wear-resistant and flexible 100% PUR-Hose for handling air.

- HM FLEX Grinding – Thermoplastic rubber/PU Hose is light weight and resists spatter from grinding or welding.

- HM FLEX – PUR-Hose is kink resistant even at lowest temperatures.
- Revolving hinge enables flexible use from every angle.
- Working temperature: –30°C - +60°C.
- Max working pressure: 20 bar.

DIMENSIONS (mm)

Model	L	H	W
HM FLEX	370	380	200

Model	Length m	Hose inside dia mm	Hose inside dia in	Connection distribution hose BSP	Air flow (at 1 bar pressure drop) l/s	Weight kg	Weight lb	Ordering No.
HM FLEX Grinding	8	8	5/16	1/4", male thread	9	8.5	18.7	8202 1181 02
HM FLEX	10	10	3/8	1/4", male thread	14	8.5	18.7	8202 1181 00

HM FLEX L, HM FLEX OIL and HM FLEX GREASE

HM Flex L – For handling air and water. The HoseMaster hose reel HM Flex L has a high quality black rubber hose (externally NBR/PVC, internally NBR, synthetic textile braiding) with a male BSP fitting in free hose end.

HM Flex Oil – For handling oil. The HoseMaster hose reel HM Flex Oil has a high quality black rubber hose (externally SBR, internally SBR, single steel braiding) with a female BSP fitting chrome plated (60° cone) in free hose end.

HM Flex Grease – For handling grease. The HoseMaster hose reel HM Flex Grease has a high quality black rubber hose (externally and internally oil resistant synthetic rubber, double steel braiding) with a female BSP fitting chrome plated (60° cone) in free hose end.

- Movable brackets give a choice between wall, floor and ceiling mounting.
- Working temperature: –30°C - +60°C.
- Max working pressure is 15 bar.

DIMENSIONS (mm)

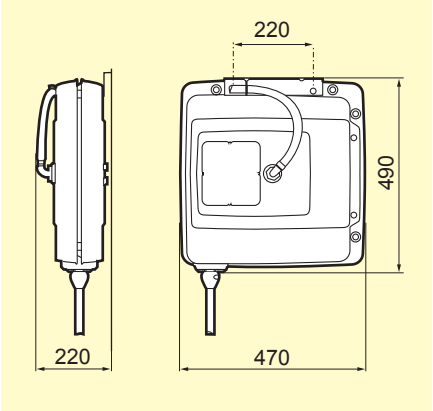

Model	Length m	Hose inside dia mm	Hose inside dia in	Connection distribution hose BSP	Air flow (at 1 bar pressure drop) l/s	Weight kg	Weight lb	Ordering No.
HM FLEX L	10	12.5	1/2	1/2", male thread	22	16	35.3	8202 1181 56
HM FLEX OIL	15	10	3/8		–	16	35.3	8202 1181 61
HM FLEX OIL	10	12.5	1/2	1/2", female thread[a]	–	16	35.3	8202 1181 62
HM FLEX GREASE	15	6	1/4	1/4", female thread[a]	–	16	35.3	8202 1181 60

[a] 60 degrees cone.

HM OPEN FLEX and HM OPEN FLEX L

The HM OPEN FLEX and HM OPEN FLEX L have an open steel casing and a highly wear resistant and flexible 100% PUR-braided hose for handling air. It can be fitted to the wall, ceiling or floor by the mounting bracket or on the wall and ceiling with the included revolving hinge. Having no hoses on the floor provides a safe and clean workshop environment.

- Revolving hinge enables flexible use from every angle.
- PUR-Hose is kink resistant even at lowest temperatures.
- Working temperature: –30°C - +60°C.
- Max working pressure: 20 bar.

DIMENSIONS (mm)

Model	L	H	W
HM OPEN FLEX L	495	200	520
HM OPEN FLEX	470	470	200

Model	Length m	Hose inside dia mm	Hose inside dia in	Connection distribution hose BSP	Air flow (at 1 bar pressure drop) l/s	Weight kg	Weight lb	Ordering No.
HM OPEN FLEX	10	10	3/8	1/4", male thread	12	10.5	23.1	8202 1181 12
HM OPEN FLEX	15	10	3/8	1/4", male thread	8	11	24.3	8202 1181 10
HM OPEN FLEX L	10	13	1/2	1/2", male thread	16	13	28.7	8202 1181 22
HM OPEN FLEX L	15	13	1/2	1/2", male thread	14	14	30.9	8202 1181 20

HM TURBO and HM XL

The HM TURBO and HM XL have an open steel casing and Atlas Copco Turbo Hose for handling air. The reel can be mounted in fixed position on the wall, floor or ceiling with no hoses on the floor which provides a safe and clean environment.

- HM XL – The Rubber-Hose is flexible and resists spatter from grinding or welding.
- Working temperature: –30°C - +60°C.
- Max working pressure: 20 bar.

DIMENSIONS (mm)

Model	L	H	W
HM TURBO	360	765	340

Model	Length m	Hose inside dia mm	Hose inside dia in	Connection distribution hose BSP	Air flow (at 1 bar pressure drop) l/s	Weight kg	Weight lb	Ordering No.
HM TURBO	20	20	3/4	no coupling	50	42	92.6	8202 1181 30
HM XL	15	25	1	no coupling	60	42	92.6	8202 1181 33

TEST EQUIPMENT

AIR TOOL SIMULATOR
In order to check whether the pressure or the flow is sufficient the air tool simulator can be connected instead of the tool. The simulator is delivered with different connections.

Ordering No. 4145 0698 81*.

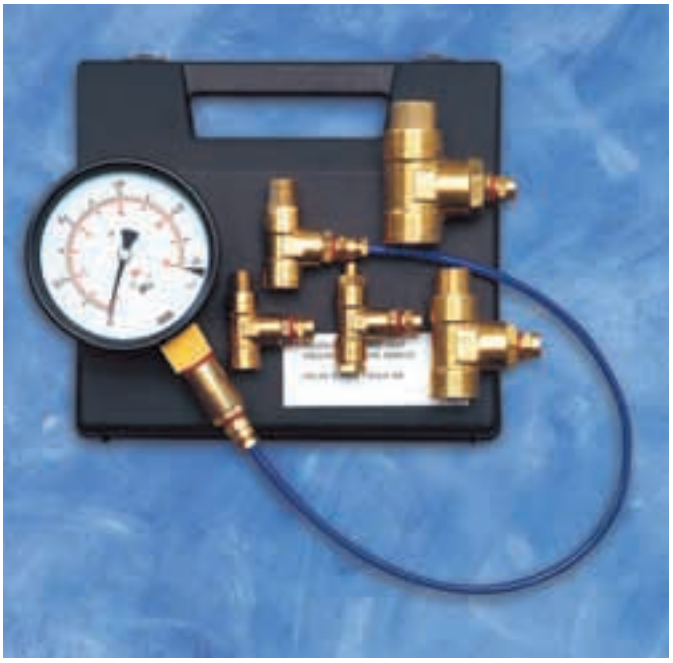

PRESSURE CONTROL UNIT
The unit consists of a quality pressure gauge and the necessary couplings for checking the air pressure at the air inlet of the machine.

Ordering No. 4145 0699 81*.

AIR LEAKAGE DETECTOR
The Air Leakage Detector is used to find leaks (e.g. in compressed air installations, vacuum installations, etc.) It works by ”listening” in a frequency band normally containing no interference and non-audible for humans (>20kHz). Leaking compressed air or electrical flashover (sparks) generates e.g. ultrasonic sound.

The equipment is delivered in a suitcase and consists of: Detecting device, head phone set and directional probe.

Ordering No. 8202 9002 00*.

* Available directly from stock.

INSTALLATION PROPOSALS

Saving you time and trouble

Choosing the correct couplings, hose and clamps can be a troublesome digging into details. To save your time and to ensure correct capacity of the airline installation, from the tapping point to the tool, we offer you installation proposals for each tool.

The installation proposals, IP, are divided into material removal tools and assembly tools and they are marked with the maximum air flow for the installation. When you have found the installation proposal for your tool, there is only an ordering number for the air preparation units, hose kit and whip hose kit required. The air preparation units are easily assembled from supplied parts. Ordering airline accessories for your tools has never been easier.

We are constantly updating our IP-Kits. Please look at our webpage for latest info.

IP 1 **Installation proposals** — This allows you to order all the parts needed for an efficient installation of the actual tool, using two or three ordering numbers.

Material removal tools

IP 1

Installation proposal for LSO / LST / LBB16 / LBB24 / LBS24 / LBB34 / LBB45 / LGB24 / LGB34 / LBV25 / LBV34 / LSF18 / LSV18
Filtered and regulated air for a maximum air flow of **10 l/s.**

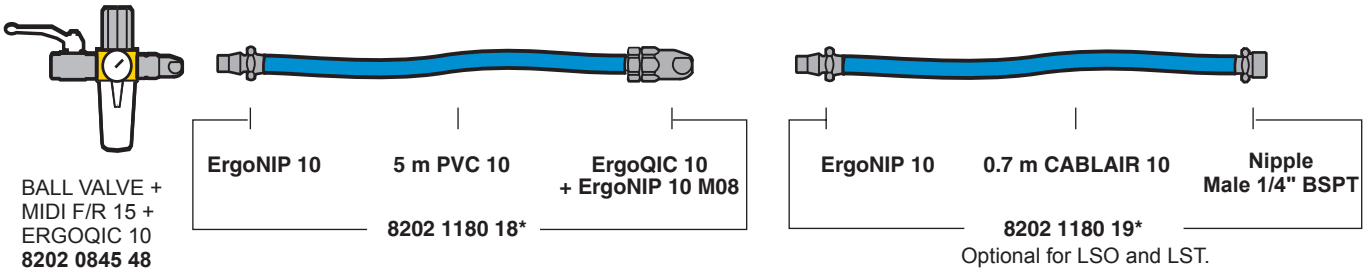

IP 2

Installation proposal for RVM07B / RRC22 / RP1 / RP3.
Filtered, regulated and oil fog lubricated air for a maximum air flow of **10 l/s.**

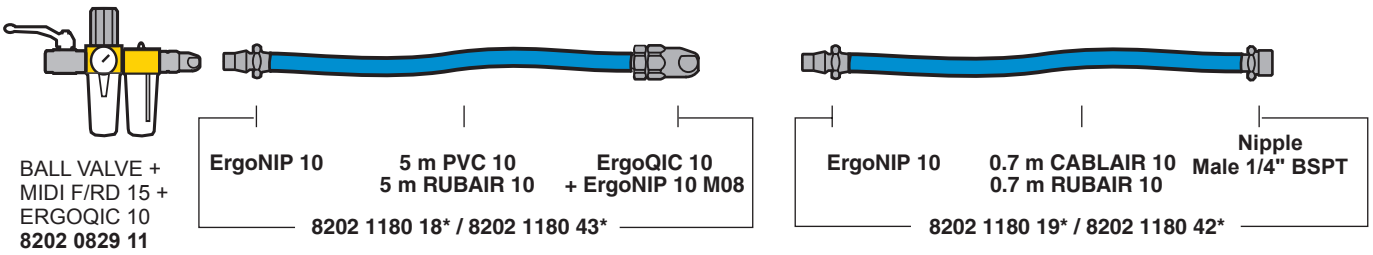

INSTALLATION PROPOSALS

Material removal tools

IP 3

Installation proposal for LSV28 / LSF27 / LSR27 / RRF21/31 / RRC13 / RRC13B / RRC13N / RRC22 / RP1 / RP3. Filtered, regulated and oil fog lubricated air for a maximum air flow of 15 l/s.

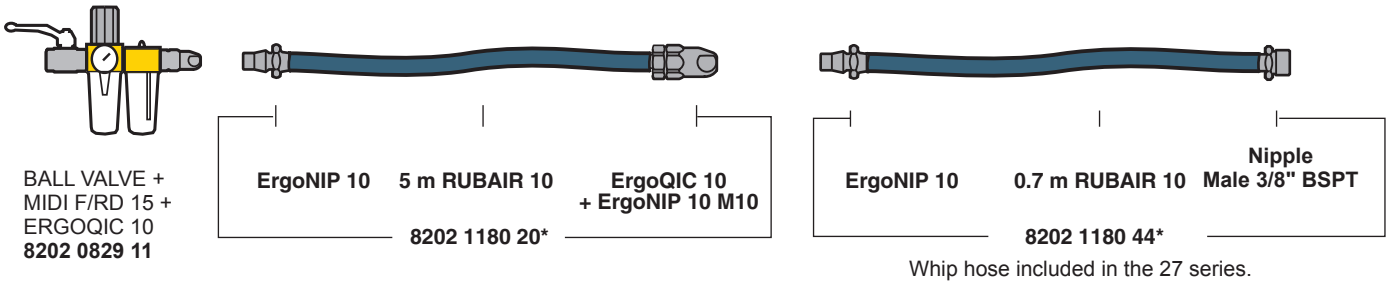

Whip hose included in the 27 series.

IP 4

Installation proposal for RRC34 / RRC65 / RRC75 / RRD37 / RRD57.
Filtered, regulated and oil fog lubricated air for a maximum air flow of **15 l/s** (1/2" tool nipple).

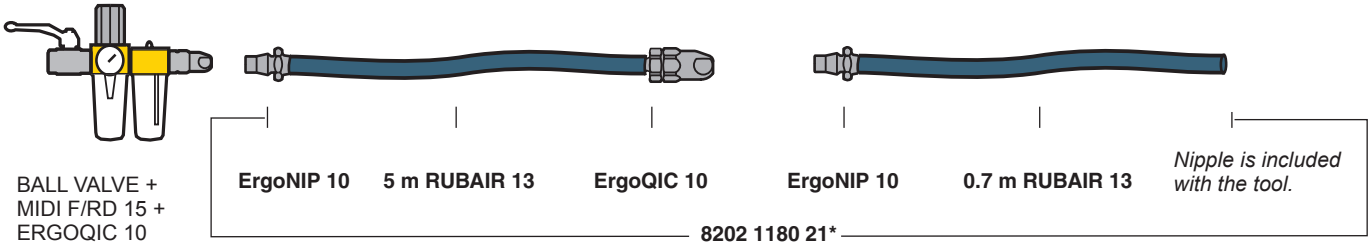

IP 5

Installation proposal for LSS53 / LSR53 / LBB36 / LSV38 / LSF38 / LSR38 / LSR43 / RAB9 / RAB12.
Filtered, regulated and oil fog lubricated air for a maximum air flow of **31 l/s**.

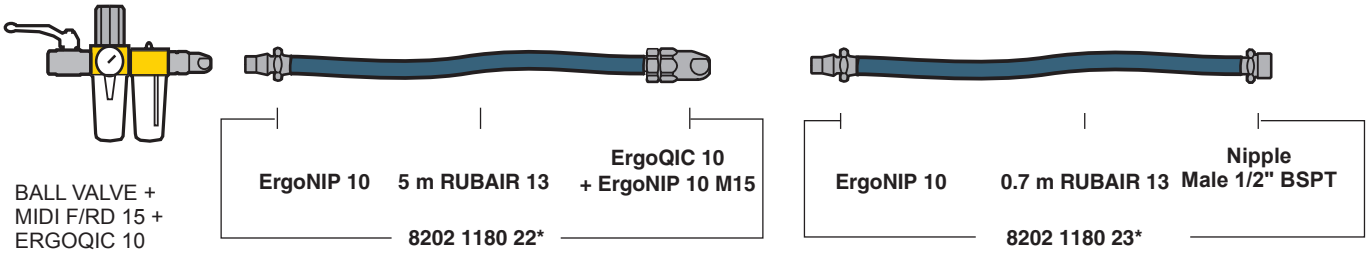

Whip hose for LSS53, LSR53 and LSR43.
Whip hose included in LSV38 SA.

IP 6

Installation proposal for GTG40 / GTR40 – When the inlet pressure to the F/R unit is below 6 bar.
Filtered and regulated air for a maximum air flow of **60 l/s**.

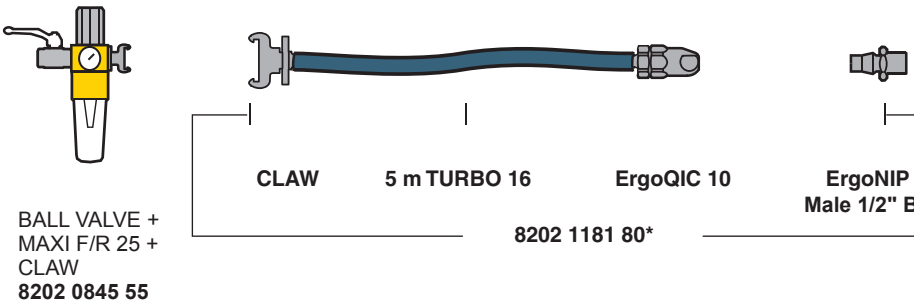

Whip hose included in the 40 series.

* Available directly from stock.

INSTALLATION PROPOSALS
Material removal tools

IP 7

Installation proposal for GTG40 / GTR40 – When the inlet pressure to the F/R unit is below 6 bar.
Filtered and regulated air for a maximum air flow of **60 l/s**.

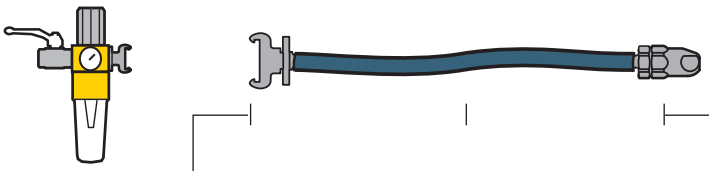

Whip hose included in the 40 series.

BALL VALVE + MAXI F/R 25 + CLAW
8202 0845 55

CLAW | **20 m TURBO 20** | **ErgoQIC 10**

8202 1181 75*

IP 8

Installation proposal for GTG40 / GTR40 – When the inlet pressure to the F/R unit is below 6 bar.
Filtered and regulated air for a maximum air flow of **60 l/s**.

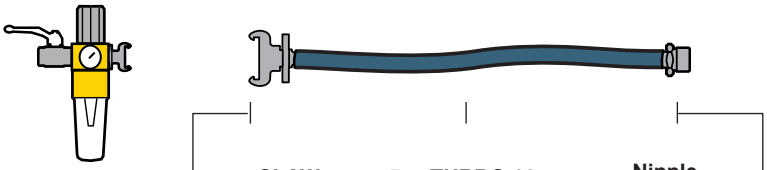

BALL VALVE + MAXI F/R 25 + CLAW
8202 0845 55

CLAW | **5 m TURBO 16** | **Nipple Male 1/2" BSPT**

8202 1181 95*

IP 9

Installation proposal for LSS64 / LSR64.
Filtered regulated and oil fog lubricated air for a maximum air flow of **60 l/s.**

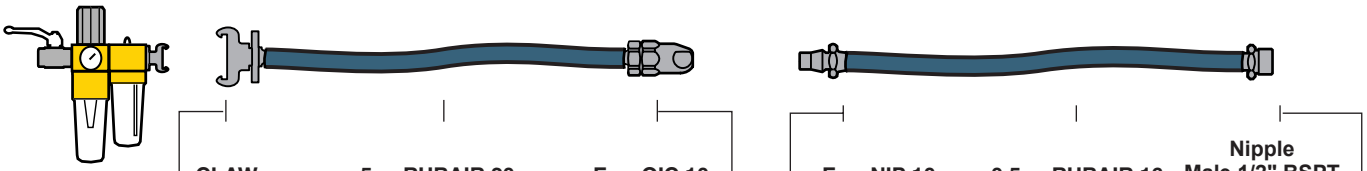

BALL VALVE + MAXI F/RD 25 + CLAW
8202 0845 58

CLAW | **5 m RUBAIR 20** | **ErgoQIC 10**

8202 1180 24*

ErgoNIP 10 | **0.5 m RUBAIR 16** | **Nipple Male 1/2" BSPT**

8202 1180 28*

IP 10

Installation proposal for LSS84.
Filtered, regulated and oil fog lubricated air for a maximum air flow of **65 l/s**.

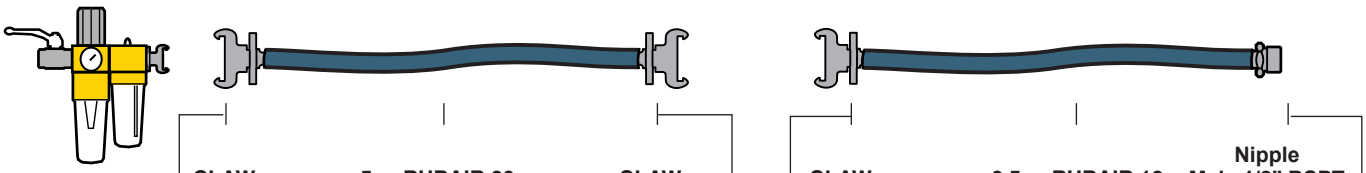

BALL VALVE + MAXI F/RD 25 + CLAW
8202 0845 58

CLAW | **5 m RUBAIR 20** | **CLAW**

8202 1180 29*

CLAW | **0.5 m RUBAIR 16** | **Nipple Male 1/2" BSPT**

8202 1180 37*

* Available directly from stock.

INSTALLATION PROPOSALS

Material removal tools

IP 11

Installation proposal for GTG21.
Filtered and regulated air for a maximum air flow of **30 l/s**.

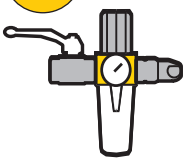

Whip hose included in the 21 series.

BALL VALVE +
MIDI F/R 15 +
ERGOQIC 10
8202 0845 48

ErgoNIP 10 | **10 m TURBO 16** | **ErgoQIC 10**

8202 1180 46*

IP 12

Installation proposal for GTG21 / LSV38.
Filtered and regulated air for a maximum air flow of **30 l/s.**

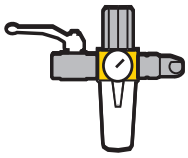

Whip hose included in the 21 series.

BALL VALVE +
MIDI F/R 15 +
ERGOQIC 10
8202 0845 48

ErgoNIP 10 | **5 m RUBAIR 13** | **ErgoQIC 10 + ErgoNIP 10 M15**

8202 1180 22*

IP 13

Installation proposal for LSS53 / LSR53 / LBB36 / LSF38 / LSV38 / LSR38 / LSR43 / RAB9 / RAB12.
Filtered, regulated and oil fog lubricated air for a maximum air flow of **31 l/s**.

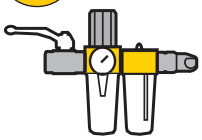

BALL VALVE +
MIDI F/RD 15 +
ERGOQIC 10
8202 0829 11

ErgoNIP 10 | **10 m TURBO 16** | **ErgoQIC 10**

8202 1180 46*

ErgoNIP 10 | **0.7 m RUBAIR 13** | **Nipple Male 1/2" BSPT**

8202 1180 23*

Whip hose for LSS53, LSV50, LSR53 and LSR43.
Whip hose included in LSV28 series.

IP 14

Installation proposal for LSF07.
Filtered and regulated and lubricated air for a maximum air flow of **14 l/s**.

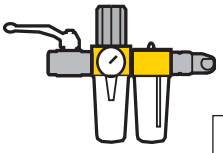

BALL VALVE +
MIDI F/RD 15 +
ERGOQIC 10
8202 0829 11

ErgoNIP 10 | **5 m PVC 10** | **ErgoQIC 08** | **ErgoNIP 08 Male 1/8" BSP**

8202 1180 30*

* Available directly from stock.

INSTALLATION PROPOSALS

Assembly tools

IP 21

Installation proposal for LUM10 / LUM12 / LUM21 / LUF10 / LUF20 / LTV08 / LBV11 / LBV25 / LGB24.
Filtered and regulated air for a maximum air flow of **5 l/s**.

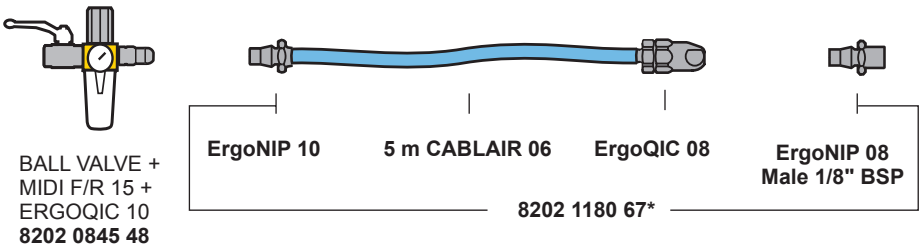

IP 21A

Installation proposal for LUM10 / LUM12 / LUM21 / LUF10 / LUF20 / LTV08 / LBV11 / LBV25 / LGB24.
Filtered and regulated air for a maximum air flow of **5 l/s**.

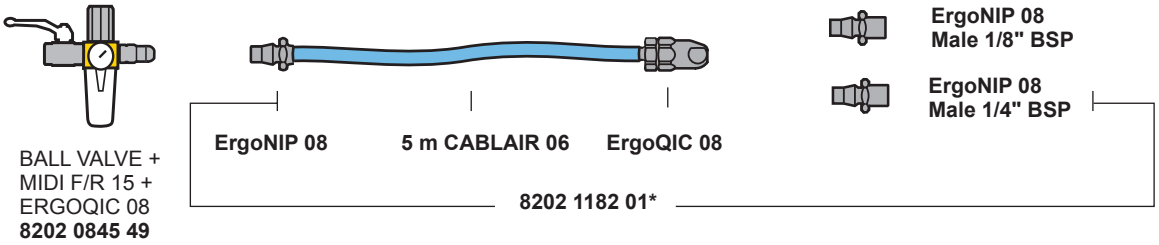

IP 22

Installation proposal for EP5 / EP6 / EP8 / EP10 / LUM25 / TWIST / LMS06 / LTV08 / LTV18 / LBB16 / LBB24 / LBS24 / LGB34.
Filtered and regulated air for a maximum air flow of **8 l/s**.

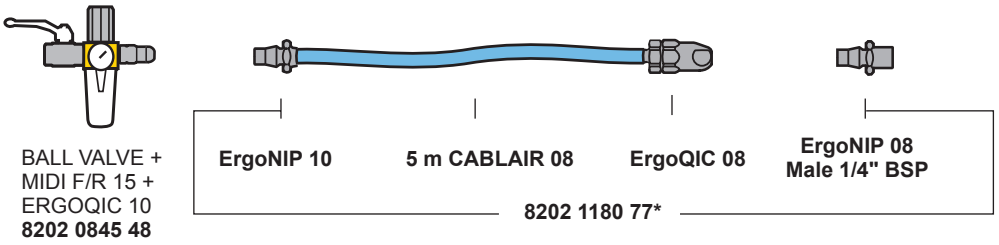

IP22A

Installation proposal for EP5 / EP6 / EP8 / EP10 / LUM25 / TWIST / LMS06 / LTV08 / LTV18 / LBB16 / LBB24 / LBS24 / LGB34.
Filtered and regulated air for a maximum air flow of **8 l/s**.

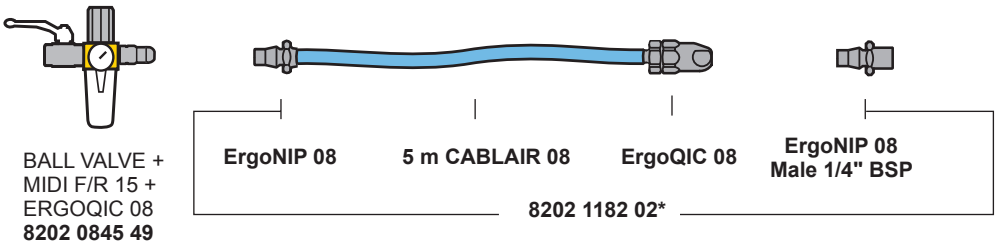

IP 23

Installation proposal for EP7 / EP8 / EP10 / EP12 PT / EP12 XS / LUF34 / LMP24 / LBB34 / COMBI34.
Filtered and regulated air for a maximum air flow of **14 l/s**.

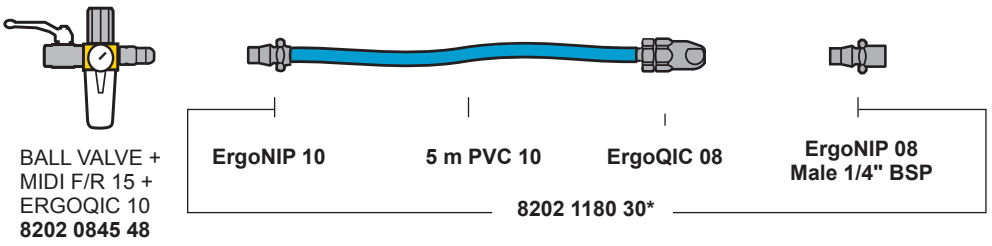

* Available directly from stock.

INSTALLATION PROPOSALS

Assembly tools

IP23A

Installation proposal for EP7 / EP8 / EP10 / EP12 PT / EP12 XS / LUF34 / LMP24 / LBB34 / COMBI34.
Filtered and regulated air for a maximum air flow of **14 l/s**.

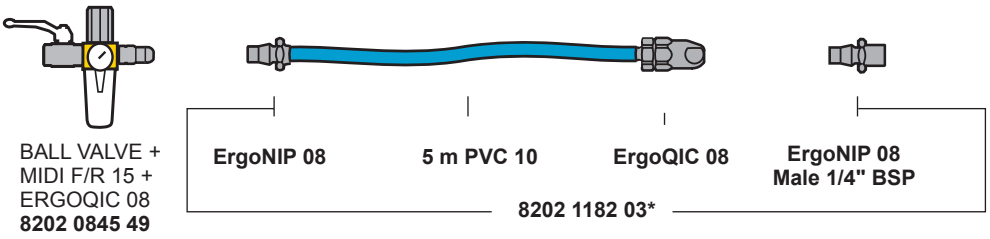

IP 24

Installation proposal for EP14 XS.
Filtered and regulated air for a maximum air flow of **14 l/s**.

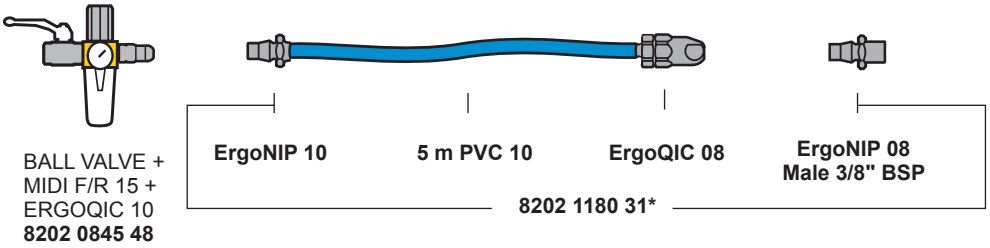

IP24A

Installation proposal for EP14 XS.
Filtered and regulated air for a maximum air flow of **14 l/s**.

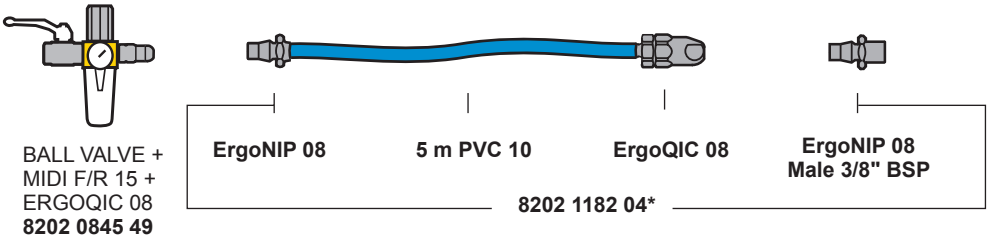

IP 25

Installation proposal for EP10 / EP12.
Filtered, regulated and oil fog lubricated air for a maximum air flow of **14 l/s**.

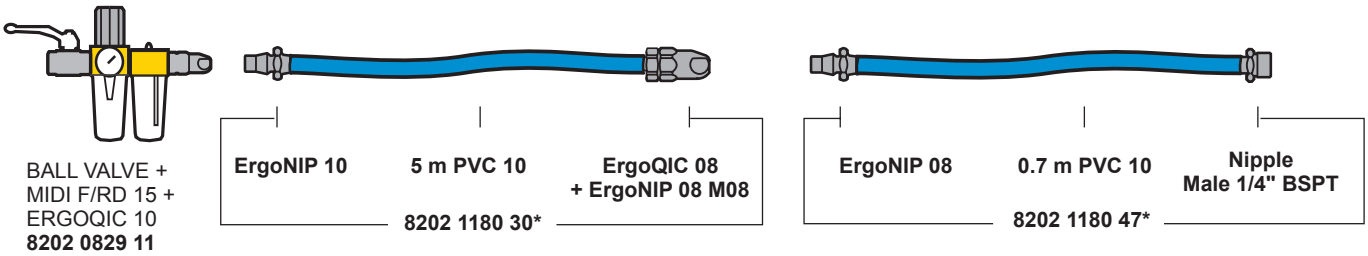

* Available directly from stock.

INSTALLATION PROPOSALS

Assembly tools

IP25A

Installation proposal for EP10 / EP12.
Filtered, regulated and oil fog lubricated air for a maximum air flow of **14 l/s.**

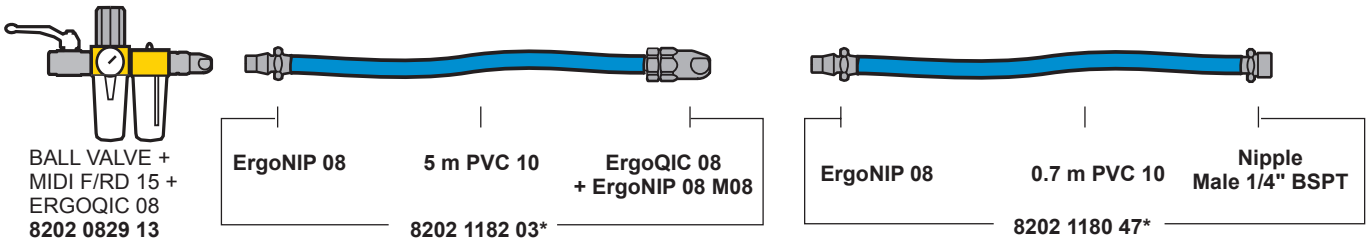

IP 26

Installation proposal for LMS17 / LMS27 / LMS37 / LTS17 / LTS27 / LTS37 / LTS57.
Filtered, regulated and oil fog lubricated air for a maximum air flow of **14 l/s**.

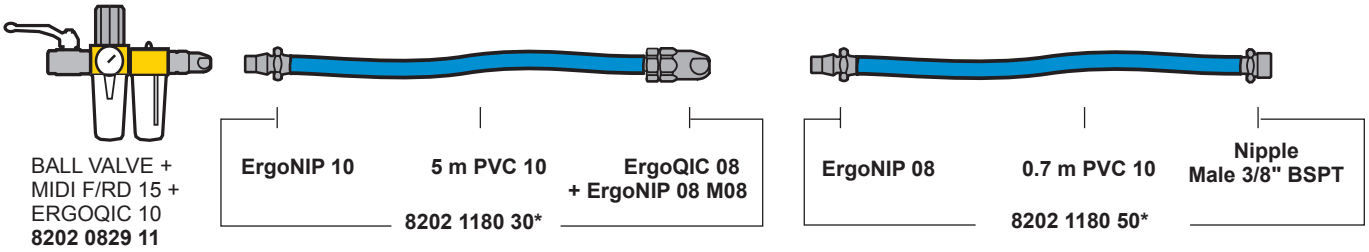

IP26A

Installation proposal for LMS17 / LMS27 / LMS37 / LTS17 / LTS27 / LTS37 / LTS57.
Filtered, regulated and oil fog lubricated air for a maximum air flow of **14 l/s**.

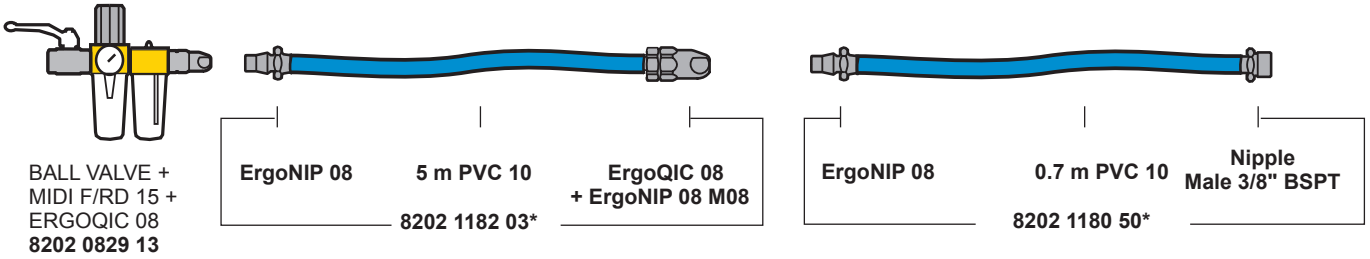

IP 27

Installation proposal for LMS37 / LMS47 / LMS57 / LMS61 / LMS64.
Filtered, regulated and oil fog lubricated air for a maximum air flow of **22 l/s**.

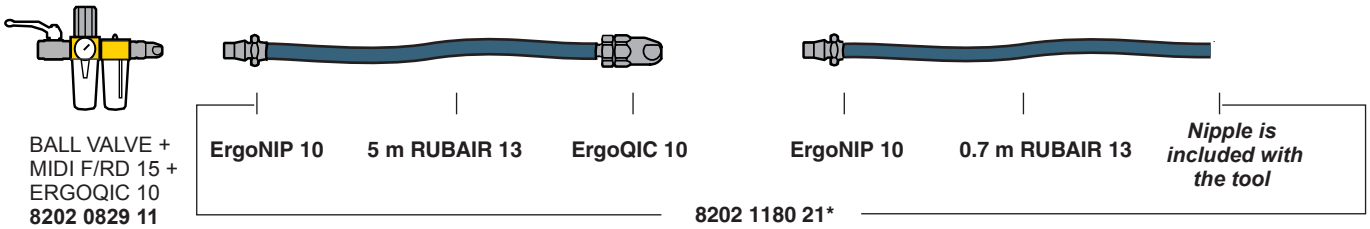

IP 28

Installation proposal for LMS86.
Filtered, regulated and oil fog lubricated air for a maximum air flow of **30 l/s**.

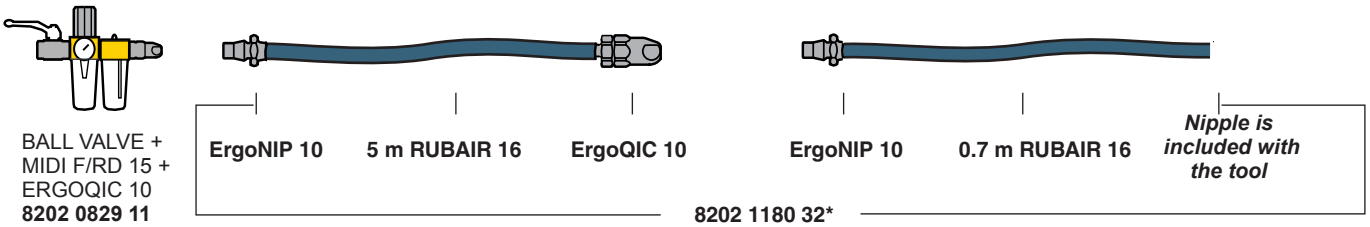

* Available directly from stock.

INSTALLATION PROPOSALS
Assembly tools

IP 29

Installation proposal for LMP24 / LTV28.
Filtered, regulated and injection lubricated air for a maximum air flow of **10 l/s**.

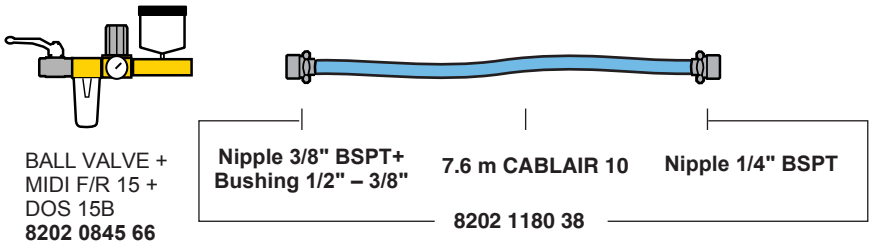

IP 30

Installation proposal for LMP51 / LTV38.
Filtered, regulated and injection lubricated air for a maximum air flow of **19 l/s**.

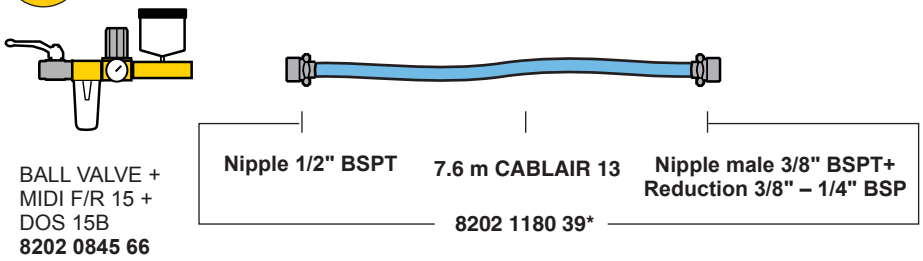

IP 31

Installation proposal for LTV46 / LTV48.
Filtered, regulated and injection lubricated air for a maximum air flow of **30 l/s**.

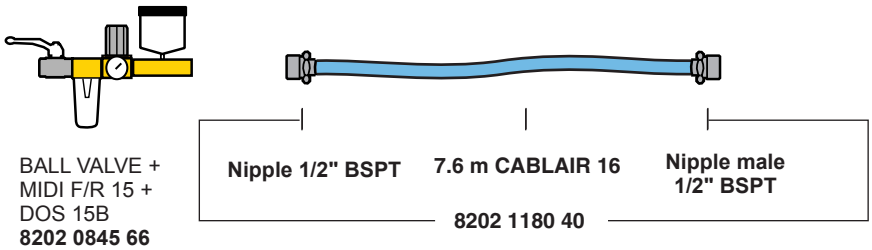

IP 33

Installation proposal for EP7 / EP8 / EP10 / EP12 / LUF34.
Filtered and regulated air for a maximum air flow of **14 l/s**.

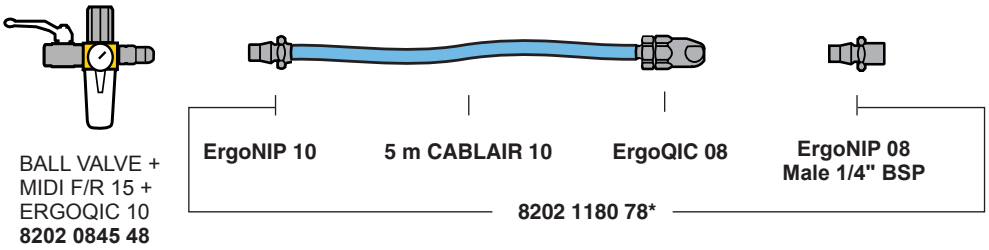

IP 34

Installation proposal for EP12 / 13 / 14 / 15 / 18 / 19 PTS/PTX, EP14 / 16 / 20 XS.
Filtered and regulated air for a maximum air flow of **22 l/s**.

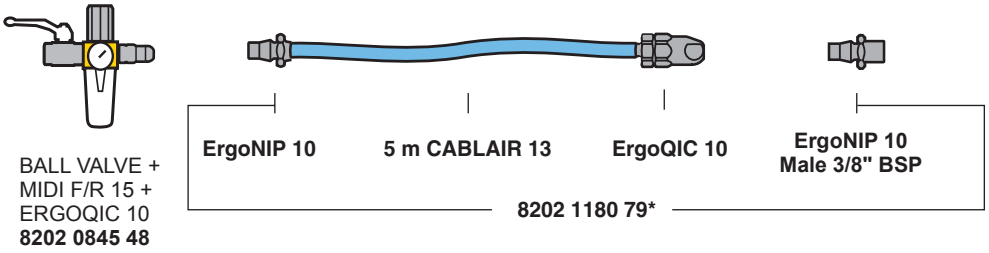

* Available directly from stock.

INSTALLATION PROPOSALS
Assembly tools

How often do you experience pressure drop and loss of tool efficiency?

Generated on-site, compressed air can be a costly energy source for a manufacturing operation using pneumatic tools. A common problem is pressure drop in your air line system, resulting in insufficient power and loss of tool efficiency. This, in turn, leads to longer work-cycles and quality problems that increase your production costs. But it doesn't need to be this way. Optimizing your compressed air systems can make a major difference to your operating costs.

Complete Hose Kits ensure maximum productivity

Discover the full potential of your assembly tools and drills with complete Hose Kits from Atlas Copco. Comprising high-flow couplings combined with our durable, flexible hoses, Atlas Copco Hose Kits have been developed specifically for use with our pneumatic tools. Atlas Copco coupling and installation kits eliminate pressure drop and ensure safe operation. They also help lengthen component life-times and reduce maintenance costs.

Name	Material	Max air flow (0.5 Bar pressure drop)	Coupling/NIP Start	Hose	Diam. of hose	Length of hose	Coupling/NIP End	Ordering No.
Hose Kit 61	IP KIT 61	16	ErgoNIP 10 H10	Cablair	10	5	ErgoQIC 10 H10	8202 1182 05
Hose Kit 62	IP KIT 62	24	ErgoNIP 10 H13	Cablair	13	5	ErgoQIC 10 H13	8202 1182 10
Hose Kit 63	IP KIT 63	18	ErgoNIP 10 H13	Cablair	13	10	ErgoQIC 10 H13	8202 1182 15
Hose Kit 64	IP KIT 64	21	ErgoNIP 10 H13	Cablair	13	8.5	ErgoQIC 10 H13	8202 1182 20
Hose Kit 65	IP KIT 65	19	ErgoNIP 10 H10	Cablair	10	1.5	ErgoQIC 10 H10	8202 1182 25
Hose Kit 66	IP KIT 66	19	ErgoNIP 10 H10	Cablair	10	1.5	Hose connection[a]	8202 1182 30
Hose Kit 67	IP KIT 67	19	ErgoNIP 10 H10	Cablair	10	1.5	Hose connection[b]	8202 1182 35
Hose Kit 71	IP KIT 71	15	NIP 10E, H10	Cablair	10	5	ErgoQIC 10 H10	8202 1182 40
Hose Kit 72	IP KIT 72	23	NIP 10E, H13	Cablair	13	5	ErgoQIC 10 H13	8202 1182 45
Hose Kit 73	IP KIT 73	17	NIP 10E, H13	Cablair	13	10	ErgoQIC 10 H13	8202 1182 50
Hose Kit 74	IP KIT 74	20	NIP 10E, H13	Cablair	13	8.5	ErgoQIC 10 H13	8202 1182 55
Hose Kit 81	IP KIT 81	16	No nip	Cablair	10	5	ErgoQIC 10 H10	8202 1182 60
Hose Kit 82	IP KIT 82	18	No nip	Cablair	13	10	ErgoQIC 10 H13	8202 1182 65
Hose Kit 90	IP KIT 90	5	NIP 10E, H06	Cablair	6	5	QIC 10 SE, H06	8202 1182 70
Hose Kit 91	IP KIT 91	9	NIP 10E, H08	Cablair	8	5	QIC 10 SE, H08	8202 1182 75
Hose Kit 92	IP KIT 92	6	NIP 10E, H08	Cablair	8	10	QIC 10 SE, H08	8202 1182 80
Hose Kit 93	IP KIT 93	11	NIP 10E, H10	Cablair	10	5	QIC 10 SE, H10	8202 1182 85
Hose Kit 94	IP KIT 94	19	NIP 10E, H13	Cablair	13	5	QIC 10 SE, H13	8202 1182 90
Hose Kit 95	IP KIT 95	13	NIP 10E, H13	Cablair	13	10	QIC 10 SE, H13	8202 1182 95
Hose Kit 96	IP KIT 96	8	NIP 10E, H13	Cablair	13	15	QIC 10 SE, H13	8202 1183 00
Hose Kit 97	IP KIT 97	16	NIP 10E, H13	Cablair	13	8.5	QIC 10 SE, H13	8202 1183 05
Hose Kit 98	IP KIT 98	15	NIP 10E, H10	Cablair	10	1.5	Hose connection[a]	8202 1183 10
Hose Kit 99	IP KIT 99	15	NIP 10E, H10	Cablair	10	1.5	Hose connection[b]	8202 1183 15
Hose Kit 101	IP KIT 101	15	Nipple, Cejn 315	Cablair	10	5	ErgoQIC 10 H10	8202 1183 20
Hose Kit 102	IP KIT 102	17	Nipple, Cejn 315	Cablair	13	10	ErgoQIC 10 H13	8202 1183 25

[a] With thread 1/4" [b] With thread 3/8"

Air motors

The right choice for demanding applications

Since Atlas Copco air motors are unaffected by, and generate no electrical interference, they are ideal for hazardous environments. Lubrication-free and stainless steel versions are available for applications where hygiene is crucial or the environment is corrosive.

Contents **Page**

Vane air motors 300
LZB vane air motors 301
LZL vane air motors.....301
Air motor support.....302

VANE AIR MOTORS

Air motors from Atlas Copco – the reliable, cost-effective solution when applying power to rotating machines. Consider the air motor features and characteristics giving large benefits to the designer.

- Power-to-weight performance that is superior to most other motors, in fact, 75% lighter and 85% smaller than an asynchronous electric motor with the same output.
- Can be held stalled at full torque indefinitely, and accepts repeated starting and stopping without limitation.
- Torque, speed and direction of rotation can be changed easily using simple control methods.
- Output that automatically adjusts to match the applied load.
- Controllable over a wide speed range.
- Ideal for many applications in hazardous or hostile environments.
- Smooth start-up to minimize “shock” loading on transmission components.
- Unaffected by, and will not generate, electrical interference.

Unique features for LZB motors

Lubrication-free air motors for sensitive processes where hygienic operation is crucial

Equipped with low friction vanes and sealed bearings the lubrication-free motors release no lubricants into the air. They offer a viable drive solution for sensitive processes and hygienic environments where oil contamination would be at best a problem and, at worst, a catastrophe.

Stainless steel air motors for harsh and aggressive environments

The stainless steel air motors are ideal for harsh or even aggressive environments where hygiene is essential. They have a “clean” design with no pockets where dirt can collect. They are fitted with double shaft seals to prevent water from entering the gears. Lubrication-free versions are also available.

High torque air motors when a real workhorse is needed

Fitted with extra strong planetary gears the high torque air motors provide torques up to 680 Nm. The gears are dimensioned to stand being loaded at full stall torque indefinitely. Despite their strength the high torque air motors are compact compared to solutions with helical or worm gears. Lubrication-free versions are also available.

Explosion proof certified versions

Our air motors are available in explosion proof certified versions, in compliance with the European Union's ATEX Directive on equipment for potentially explosive environments.

Customized air motors to your individual specifications

Whatever the requirement, Atlas Copco is always happy to help customers find solutions to their special needs. For OEMs, for instance, a customized air motor can be the most efficient solution when integrating an air motor into a machine or a tool. Special motors may have unique casings or mounting arrangements. They may utilize non-standard materials or surface coatings and be designed to achieve a specific output.

For more information on Atlas Copco vane motors see our air motor catalogue, Ordering No. 9833 8998 01.

VANE AIR MOTORS
LZB and LZL

LZB
0.1 – 1.2 kW

The LZB vane air motors are compact in design, light in weight and available in a host of different gear ratios to meet a variety of speed requirements. They are particularly suited to be built into hand held machines and also many different types of industrial equipment.

Model	Max output kW	Max output hp	Speed at max output r/min	Torque at max output Nm	Torque at max output ft lb	Min start torque Nm	Min start torque ft lb	Free speed r/min	No. of gear ratios	Motor diameter mm	Motor diameter in
Non-reversible											
LZB14	0.16	0.22	330 - 9100	0.17 - 4.7	0.12 - 3.4	0.26 - 7	0.19 - 5.1	690 - 19500	5	27	1.1
LZB22	0.25	0.34	235 - 9600	0.25 - 9.9	0.18 - 7.3	0.45 - 17	0.33 - 12.5	510 - 21500	7	36	1.4
LZB33	0.39	0.52	10 - 9400	0.40 - 340	0.30 - 251	0.76 - 680	0.56 - 501	21 - 20000	17	42	1.6
LZB42	0.65	0.87	25 - 10500	0.59 - 236	0.44 - 174	1.10 - 430	0.80 - 315	50 - 21000	12	46	1.8
LZB46	0.84	1.13	25 - 10800	0.74 - 300	0.55 - 220	1.20 - 490	0.88 - 360	50 - 21000	12	46	1.8
LZB54	1.20	1.60	65 - 9300	1.20 - 175	0.88 - 129	1.80 - 250	1.30 - 180	125 - 18000	10	60	2.4
Reversible											
LZB14	0.10	0.14	230 - 6500	0.15 - 4.1	0.11 - 3.0	0.19 - 5	0.14 - 3.7	460 - 13000	5	27	1.1
LZB22	0.16	0.22	5 - 6500	0.24 - 10.8	0.18 - 8	0.35 - 13.4	0.26 - 9.9	5 - 13800	9	36	1.4
LZB33	0.24	0.32	7 - 7000	0.34 - 305	0.25 - 225	0.46 - 412	0.34 - 304	5 - 14000	21	42	1.6
LZB42	0.53	0.71	19 - 8100	0.62 - 250	0.46 - 184	0.70 - 270	0.52 - 200	37 - 16000	12	46	1.8
LZB46	0.62	0.83	20 - 8600	0.68 - 275	0.50 - 200	0.75 - 300	0.55 - 220	40 - 17000	12	46	1.8
LZB54	0.82	1.10	45 - 6800	1.20 - 165	0.88 - 122	1.20 - 165	0.88 - 122	90 - 13000	10	60	2.4

The LZB14, LZB22 and LZB33 models are available in lubrication-free versions. LZB14, LZB22 and LZB33 can be obtained in a stainless steel version. The standard non-reversible motors have clockwise rotation but can also be obtained with anti-clockwise rotation.

LZL
1.3 – 6.5 kW

The LZL vane motors are reversible air motors which have been designed to offer outstanding starting and low speed performance. These general purpose motors are powerful, durable and offer long service life.

Model	Torque at half free speed Nm	Torque at half free speed ft lb	Stall torque Nm	Stall torque ft lb	Air consumption at half free speed[a] l/s	Air consumption at half free speed[a] cfm	Free speed r/min	Weight kg	Weight lb
LZL03 M	1.5	1.1	3.2	2.35	16	34	5800	2.9	6.4
LZL05 M	3	2.2	6	4.4	23	49	5000	3.9	8.6

[a] Note that the air consumption in a typical mixing application normally is less than 50% of the values in the table.

LZL 03/05M – EX certified according to ATEX directive Ex II 2G T5 IIC D85° C.

LZL 03/05 available with IEC and Nema flange.

Model	Max output kW	Max output hp	Speed at max output r/min	Torque at max output Nm	Torque at max output ft lb	Min start torque Nm	Min start torque ft lb	Free speed r/min	No. of gear ratios
Motor only									
LZL03 S	1.05	1.4	5300	1.9	1.4	2.8	2.05	11000	–
LZL05 S	1.3	1.7	4200	3	2.2	4.8	3.5	9000	–
LZL15	3.2	4.3	4500	6.8	5.0	10.9	8.0	7200	–
LZL25	5.0	6.7	4000	12.0	8.8	18.0	13.2	6000	–
LZL35	6.5	8.7	3100	20.0	14.7	32.0	23.6	5000	–
With helical gear unit									
LZL05	1.7	2.3	17 - 594	26 - 705	19 - 520	42 - 1112	31 - 820	37 - 1012	11
LZL15	3.2	4.3	17 - 495	58 - 1331	43 - 981	96 - 2134	71 - 1573	35 - 792	11
LZL25	5.0	6.7	14 - 438	103 - 2349	76 - 1732	159 - 3471	117 - 2560	29 - 657	11
LZL35	6.5	8.7	19 - 615	98 - 2459	72 - 1814	156 - 3935	115 - 2902	39 - 992	9
With worm gear unit									
LZL05	0.9	1.2	67 - 525	19 - 117	15 - 88	–	–	130 - 1030	7
LZL15	1.8	2.4	58 - 422	46 - 279	34 - 206	–	–	115 - 840	7
LZL25	2.8	3.8	44 - 361	82 - 571	60 - 421	–	–	90 - 740	7

LZL 03/05S – Can be Ex certified according to the ATEX directive Ex II 2G T2 IIC D240° C.

AIR MOTOR SUPPORT

Customized air motors to your individual specifications

Whatever the requirement, Atlas Copco is always happy to help customers find solutions to their special needs. For OEMs, for instance, a customized air motor can be the most efficient solution when integrating an air motor into a machine or tool.

Special motors may have unique casings or mounting arrangements. They may utilize non-standard materials or surface coatings and be designed to achieve a specific output.

Select your air motor in 30 seconds!

Designed for Windows-based PCs, Atlas Copco has developed an Air Motor Selection Guide. It stores data on all of Atlas Copco's air motors.

The designer specifies the required torques and speed of the motor and within seconds the program chooses the optimum motor. It also supplies complete documentation with performance curves and motor data.

Ordering No. 9833 9093 00

Air motor drawing library

CAD-drawings of any of the hundreds of different Atlas Copco air motors are available to designers on CD or to download from Internet (in both .DXF and .IGS formats) from the Atlas Copco Air Motor Draw Library. These CAD-drawings can then be quickly and easily inserted into the designer's machine drawing.

Ordering No. 9833 1139 00

When more information is required

For further information on Atlas Copco vane motors please ask for a copy of our Air Motor catalogue,

Ordering No. 9833 8998 01

Hoists and trolleys

Explosion-proof operation and stepless control for a smoother safer lift

Atlas Copco air hoists and trolleys are the industry benchmark for fast, precise and reliable lifting of heavy loads − even in cramped and sometimes hostile industrial environments.

Compact and lightweight, they are easy to control, survive rough handling and provide heavy-weight performance.

Contents **Page**

Air hoists 304
Trolleys 305
Accessories 306

AIR HOISTS

Explosion proof for safe operation

Our air hoists and trolleys are ideal for lift applications in hazardous environments, where sparks or high outer temperatures could ignite explosive gases, vapour or dust. All are certified Explosion-proof, to stringent European standards, in compliance with the EU ATEX Directive. Available in six sizes, they offer lift capacities from 200 kg to 5 tons. All hoists and trolleys are certified to level Ex II 2G T5 II B D100°C.

- **Precise and stepless speed control** – Through effective stepless control with excellent creep characteristics the LLA air hoists are fast to use over the entire speed range.
- **Heavy duty performance** – These air hoists can continually operate at maximum load with frequent start and stop cycles without risk of damage.
- **Elimination of load sink** – The patented brake mechanism eliminates loadsink when starting lifting, and automatically holds the load if the air supply fails.
- **Compact size** – The small dimensions make the LLA hoists easy to install, even in the most restricted space. Also the low weight means the hoists can easily be moved for maintenance or relocation purposes.

- **Lubrication free** – The complete range is also available in lubrication free versions.

Model	Max lifting capacity kg	Lifting speed at full load m/min	ft/min	Chain drops qty	Weight excl chain kg	lb	Chain weight kg/m	lb/ft	Required chain-length metre	Air consumption l/s	cfm	Hose size mm	in	Air inlet thread BSP	Sound level dB(A)	Ordering No.
LLA200 EX	200	20.2	66.3	1	12.7	28.0	0.9	0.6	Lifting height + 0.5	38	81	12.5	1/2	1/2	84	8451 1540 02
LLA250 EX	250	18.6	61.0	1	12.7	28.0	0.9	0.6	Lifting height + 0.5	37	78	12.5	1/2	1/2	84	8451 1540 10
LLA500 EX	500	12.6	41.3	1	12.7	28.0	0.9	0.6	Lifting height + 0.5	38	81	12.5	1/2	1/2	83	8451 1540 28
LLA1000 U EX[a]	1000	6.3	20.7	2	14.5	32.0	0.9	0.6	2 x Lifting height + 0.5	38	81	12.5	1/2	1/2	83	8451 1540 69
LLA1000 EX	1000	6.3	20.7	2	15.0	33.0	0.9	0.6	2 x Lifting height + 0.5	38	81	12.5	1/2	1/2	83	8451 1540 36
LLA2500 EX	2500	3.2	10.5	1	42.5	93.7	2.9	1.9	Lifting height + 0.6	40	85	12.5	1/2	1/2	79	8451 1540 44
LLA5000 EX	5000	1.6	5.2	2	65.5	144.4	2.9	1.9	2 x Lifting height + 0.9	40	85	12.5	1/2	1/2	79	8451 1540 51
Lubrication free																
LLA200L EX	200	20.2	66.3	1	12.7	28.0	0.9	0.6	Lifting height + 0.5	38	81	12.5	1/2	1/2	84	8451 1550 09
LLA250L EX	250	18.6	61.0	1	12.7	28.0	0.9	0.6	Lifting height + 0.5	37	78	12.5	1/2	1/2	84	8451 1550 17
LLA500L EX	500	12.6	41.3	1	12.7	28.0	0.9	0.6	Lifting height + 0.5	38	81	12.5	1/2	1/2	83	8451 1550 25
LLA1000L U EX[a]	1000	6.3	20.7	2	14.5	32.0	0.9	0.6	2 x Lifting height + 0.5	38	81	12.5	1/2	1/2	83	8451 1550 66
LLA1000L EX	1000	6.3	20.7	2	15.0	33.0	0.9	0.6	2 x Lifting height + 0.5	38	81	12.5	1/2	1/2	83	8451 1550 32
LLA2500L EX	2500	3.2	10.5	1	42.5	93.7	2.9	1.9	Lifting height + 0.6	40	85	12.5	1/2	1/2	79	8451 1550 41
LLA5000L EX	5000	1.6	5.2	2	65.5	144.4	2.9	1.9	2 x Lifting height + 0.9	40	85	12.5	1/2	1/2	79	8451 1550 58

[a] Without overload protection device, not to be used within the European Community.
NOTE: Load chain and control chain must be ordered separately.
Performance figures are at 6 bar working pressure.

DIMENSIONS

Model	A mm	A in	B mm	B in	C mm	C in	D mm	D in
LLA200 / 250 EX	377	14.8	122	4.8	390	15.4	29	1.1
LLA500 EX	377	14.8	122	4.8	390	15.4	29	1.1
LLA1000 U EX	445	17.5	122	4.8	390	15.4	29	1.1
LLA1000 EX	495	19.4	122	4.8	390	15.4	29	1.1
LLA2500 EX	575	22.6	212	8.3	546	21.5	50	2.0
LLA5000 EX	785	30.9	249	9.8	546	21.5	60	2.4

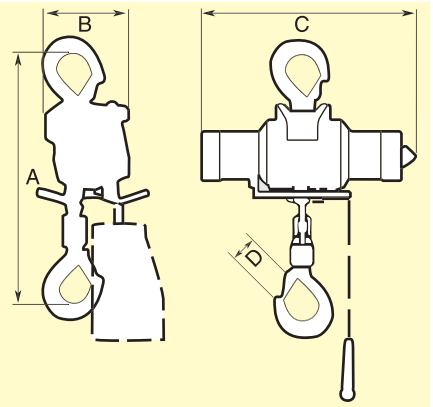

ACCESSORIES INCLUDED

Wooden handle for pull chain hose nipple BSP 1/2"

Suspension hook and load hook

OPTIONAL ACCESSORIES

Page 306

TROLLEYS

Atlas Copco trolleys are available in 3 sizes, for maximum loads of 1, 3 and 5 tonnes. All models can be offered with air motor drive. The 1 tonne trolley includes motor without pedant control. The 3 and 5 tonne includes handle for control chain (control chain must be ordered separately). The 1 and 3 tonne trolleys are also available in manual versions.

Simple installation

The trolleys are easy to install. The wheels are designed so that the trolley is equally suitable on both parallel and tapered I-beam section beams. The distance between the wheels is easily adjusted to suit the beam width by turning the suspension yoke.

Model	Max capacity	Max speed with full load		Air consumption		Beam width		Curve radius min		Weight		Sound level	Ordering No.
	kg	m/min	ft/min	l/s	cfm	mm	in	mm	in	kg	lb	dB(A)	
Manual													
TLT1000 HN	1000	-	-	-	-	50-160	2-6.3	1250	50	9.4	21	-	8451 1520 06
TLT1000 HW	1000	-	-	-	-	161-280	6.3-11	1250	50	10.7	23.6	-	8451 1520 63
TLT3000 HN	3000	-	-	-	-	74-180	2.9-7.1	2200	86.6	31.5	69.5	-	8451 1520 55
TLT3000 HW	3000	-	-	-	-	181-300	7.1-11.8	2200	86.6	34	75	-	8451 1520 89
Motor driven													
TLT1000 MN[a]	1000	14	45.9	4	8.5	50-160	2-6.3	1250	50	11	24	85	8451 1520 14
TLT1000 MW[a]	1000	14	45.9	4	8.5	161-280	6.3-11	1250	50	12.3	27.1	85	8451 1520 71
TLT3000 MN[b]	3000	17.8	58.4	42	89	74-180	2.9-7.1	2200	86.6	48	105.8	81	8451 1520 30
TLT3000 MW[b]	3000	17.8	58.4	42	89	181-300	7.1-11.8	2200	86.6	51.5	113.5	81	8451 1520 97
TLT5000 M[b]	5000	16.2	53.1	42	89	181-300	7.1-11.8	2500	98.4	74	163.2	81	8451 1520 48

[a] Pendant control must be ordered separately.
[b] Includes handle for control chain. Control chain must be ordered separately.

Performance figures are at 6 bar working pressure.

Motor-driven trolleys have 1/2" BSP air connection.

12.5 mm (1/2") hose size is recommended for TLT1000MN/MW, 20 mm for TLT3000MN/MW and TLT5000M.

DIMENSIONS

Model	A		B		C		D		E		F	
	mm	in	mm	in	mm	in	mm	in	mm	in	mm	in
Manual												
TLT1000 HN	26	1.1	52	2.0	212	8.3	-	-	264	10.4	-	-
TLT1000 HW	26	1.1	52	2.0	Beam width + 57	Beam width + 2.3	-	-	264	10.4	-	-
TLT3000 HN	35	1.4	78	3.1	262	10.3	-	-	384	15.2	-	-
TLT3000 HW	35	1.4	78	3.1	Beam width + 89	Beam width + 3.5	-	-	384	15.2	-	-
Motor driven												
TLT1000 MN	24	1.0	52	2.0	212	8.3	225	8.9	264	10.4	-	-
TLT1000 MW	24	1.0	52	2.0	Beam width + 57	Beam width + 2.3	225	8.9	264	10.4	-	-
TLT3000 MN	37	1.5	78	3.1	262	10.3	148	5.9	380	15.0	94	3.7
TLT3000 MW	37	1.5	78	3.1	Beam width + 89	Beam width + 3.5	148	5.9	380	15.0	94	3.7
TLT5000 M	41	1.6	93	3.7	Beam width + 97	Beam width + 3.8	166	6.6	437	17.2	59	2.4

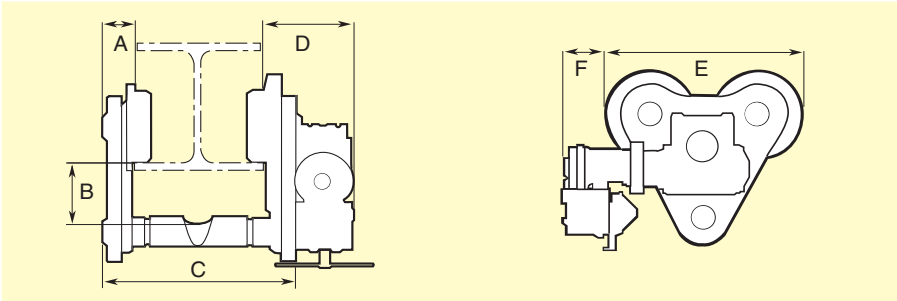

ACCESSORIES INCLUDED

TLT 3000 MN/MW/ 5000 M

Wooden handle for pull chain

OPTIONAL ACCESSORIES

Page 306

OPTIONAL ACCESSORIES. Hoists

Designation	Ordering No. LLA200/250/500/1000 EX	Ordering No. LLA2500/5000 EX
Load chain, zinc plated, per m	4310 2293 00	4310 2296 00
Control chain, zinc plated, per m	4310 0748 00	4310 0748 00
2 button pendant control		
Handle and actuators only	4310 2261 90	4310 2262 90
Hose set per m	4380 0576 91	4380 0576 91
4 button pendant control		
Handle and actuators only	4310 2263 90	4310 2264 90
Hose set per m	4380 0576 94	4380 0576 93
Twist rod control		
Complete (1.1-2.0 m)	4310 0774 91	4310 0774 91
Extension set (1.1-1.9 m)	4310 0780 91	4310 0780 91
Articulating link	4310 0876 91	4310 0876 91
Chain collectors		
PVC for length of chain		
– 4 m	4310 0742 04	
– 7 m	4310 0742 07	4310 2291 07
–12 m	4310 0742 12	
–18 m	4310 0742 18	
–25 m	4310 0742 25	
Chain collectors		
Steel for length of chain		
–12 m		4310 2102 80
–18 m		4310 2109 80
Overload protection device		
LLA200 EX / 250 EX	4310 0812 83	
LLA500 EX	4310 0812 84	
LLA1000 U EX	4310 0812 85	
LLA1000 EX / 2500 EX / 5000 EX	incl as standard	incl as standard
Safety hooks, zinc plated	4310 0739 01	
Chain stop, zinc plated	4310 0740 91	4310 2097 91

NOTE: For items specified per metre, the required length should be indicated by multiplying the Ordering No. by the required length, ie. to order 12 m of chain for an LLA250 the order should be **12 x 4310 2293 00**.

When ordering load chain, follow the recommendations on chain given in the technical data for LLA hoists.

OPTIONAL ACCESSORIES. Trolleys

Designation	Ordering No. TLT1000M	Ordering No. TLT3000M	Ordering No. TLT5000M
Zinc plated control chain per m		4310 0748 00	4310 0748 00
2 button pendant control			
Handle and actuator only	4310 0835 91	4310 2262 90	4310 2262 90
Hose kit per m	4380 0576 92	4380 0576 91	4380 0576 91

Air hoist selection program

The fastest way to choose correct hoists and accessories is by using the Windows based computer program available on CD-rom.
Ordering No. 9833 1087 00

To order your hoist or trolley with accessories factory fitted, simply list all items required and add the **Ordering No. 8990 0001 00**, to order.

EXAMPLE: To order a 500 kg hoist with motor driven trolley, four button five-metre long pendant control and a load chain for a ten-metre lift, send the following:

Order to be sent			Comments
1	x	8451 1540 28	LLA500 EX Hoist block
11	x	4310 2293 00	Load chain for hoist = Required height of lift + 0.5 m, (see technical data for LLA Hoists)
1	x	8451 1520 14	TLT1000MN Motor driven trolley
1	x	4310 2263 90	4 button handle + hoist actuator
5	x	4380 0576 94	Hose set for 4 button pendant control
1	x	8990 0001 00	Instruction to assemble above items

Service

Who could be better qualified to service your tools than Atlas Copco?

We offer you a service partnership on a local or global basis. We will gladly take our share of the responsibility for keeping your plant running around the clock.

We offer you a wide selection of standard service products that can be tailored to the specific needs of your plant according to Atlas Copco quality standards.

Our well trained, highly skilled mechanics are always ready to offer the best technical support and advice.

Let our service products help you eliminate downtime and improve your quality!

Contents **Page**

ToolScan RCM.....308

Service agreements.....309

Calibration service and ToolStart.....310

Customer training 311

TOOLSCAN RCM

Do you know for sure that you perform the optimal level of service on your tools and equipment? ToolScan RCM enables Atlas Copco fastening and systems experts to indentify your precise needs in terms of tool and equipment service intervals. We help you optimize your existing service program or, if necessary, develop a new one.

Based on the Reliability-centered Maintenance (RCM) process, ToolScan RCM is a well tried and tested method of rationalizing and reducing tool repair costs and increasing operator safety. It also assures quality in your assembly operations, reducing downtime, reworking, and warranty costs.

We start by reviewing your assembly operation to detect safety and quality critical applications. These are subjected individually to a full ToolScan RCM analysis. Your non-critical applications are normally handled in groups.

Based on the ToolScan RCM analysis, our experts will recommend a combination of the maintenance options described below.

On-condition Maintenance

Where appropriate, we test your equipment at regular intervals and can detect if it is between the point at which failure starts and the point where a functional failure occurs. We then perform a service action agreed with you in advance.

Scheduled Restoration

Scheduled Restoration involves replacing components in your tools before they enter their wear out zone. Where On-condition Maintenance is not technically feasible or profitable, a Scheduled Restoration schedule by application is the best solution. The life of the tool is prolonged by putting it into an ”Intelligent” Preventive Maintenance Program, replacing it with a back-up tool each time it is taken out of service.

Scheduled Discard

Scheduled Discard involves replacing the entire tool with a new one before it enters its wear out zone. The lifetime of the tool is calculated based on the application.

No-schedule Maintenance

Where On-condition Maintenance, Scheduled Restoration, and Scheduled Discard are not economically viable, it is agreed to run the tools until mechanical failure occurs. Then corrective, or No-schedule Maintenance is performed. The tool is normally repaired as part of our Fixed Price repair system.

ATLAS COPCO SERVICE

ATLAS COPCO SERVICE AGREEMENTS

Continuous monitoring and maintenance is one of the most cost-efficient ways to optimise your production.Scheduled service intervals eliminate the risk of unwelcome surprises – and enhance availability as well ensures your production quality.

Choose from our service programs, tailored to your specific requirements.

Full Coverage Service

Our full coverage service program is at the top of our program of service agreements. The program covers all spare parts, labour costs and repairs at a fixed cost. The agreement basically comprises a preventive maintenance program for your tools and equipment, tailored to your application. Various standard modules can be selected within this program, for example controller check, calibration, and software upgrades. With a fixed cost for the period, you gain full control over your operating budget and achieve highest possible productivity.

Preventive Maintenance

Our preventive maintenance program is built on our standard service kits, labour and any agreed parts.

The base of the agreement is a preventive maintenance program tailored to your application. Various standard modules can be selected within this program, for example controller check, calibration, and software upgrades. Atlas Copco will maintain your equipment in peak condition for a specified number of years at a fixed cost, with full documentation.

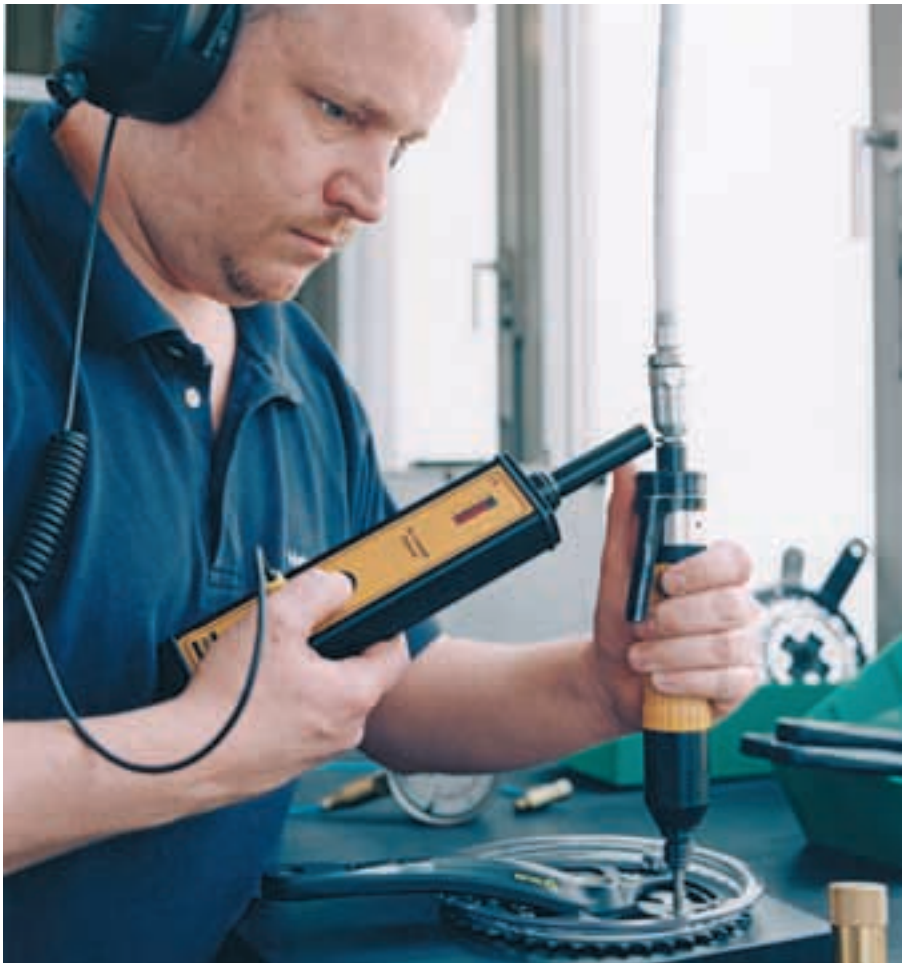

Fixed Price Repair

A fixed-price program ensuring faster turn-arounds and cutting administration costs at every level. The tools are repaired and tested according to Atlas Copco specifications. We also change basic wear parts as necessary, thus ensuring longest lifetime to next repair and lowest possible life cycle cost. Combining this program with our service box concept would cut your cost for administration and handling even further.

ToolScan™

Identify problems before they accur. Ask for ToolScan™ and an experienced Atlas Copco service engineer will check the status of your tools on-site for a fixed price per tool. A full report of the findings on each tool is provided after every ToolScan™.

CALIBRATION SERVICE

On the assembly line, you need to be certain about the performance of your power tools. The tools have to be calibrated at regular intervals. This service keeps your transducerized tools and torque measurement equipment calibrated, for optimum performance. Atlas Copco offers a complete range of calibration services for all your tools and equipment. Most Atlas Copco Service Centers are today ISO 17025 certified.

Whether you choose a verification program or a fully documented accredited calibration program, we keep track of when it should be performed. You can then have complete peace of mind.

Calibration
Calibration of transducerized tools and electronics against traceably calibrated references in compliance with industry standards.

Capability
The tool or spindle is measured in compliance with ISO 5393 (both on soft and hard joints) to determine tool capability (Cm and Cmk).

Verification
To verify tool performance, delivered torque and associated scatter, for a specific joint/application. All measurements conducted on the actual joint (Cp and Cpk).

Accredited calibration
Calibration equipment must be calibrated too. This demands greater precision than for normal calibration. The quality of the calibration result is assured by ISO 17025 accredited calibration labs. Atlas Copco has today six accredited calibration labs for torque transducer calibration. Three in Europe (Essen, Dingolfing, Milano), one in NorthAmerica (Detroit) and one in Brazil (SaoPaulo) and one in Mexico.

TOOLSTART

This product cover everything needed for your new tool and system installation.

- Joint analysis and documentation.
- Reproduction of your joints on a simulator
- Installation
- Start-up.
- Optimization of the system program.
- Test running
- Operator training.

With this information together with our RCM reliability data an optimized service agreement can easy be developed.

Atlas Copco calibration service

Product	Calibration	Capability	Verification	Accredited calibration
Air assembly tools		X	X	
Tensor S	X	X	X	
Tensor DS		X	X	
QMX/QMR	X	X	X	
Power Focus/Focus	X			
ACTA 400/3000	X			
IRTT/QRTT/MT	X			X
MRTT/SRTT	X			X
BLM 5000	X			
BLM Testbenches	X			
Wrenches	X			

For more information, please contact your local Atlas Copco representative

ATLAS COPCO TRAINING

Getting the most from your processes, your people and your tools? Could your processes be more efficient? Should your people be more aware of ergonomics in their daily work?

Atlas Copco training will:

- Improve your processes
- Enhance the knowledge and skills of your operators and technicians.
- Give you an effective combination of theory and hands-on exercises.

Course program
Ranging from basic to advanced level, our courses take the form of seminars and longer training programs. They are focused on tightening technology, ergonomics, Atlas Copco tools, systems and software. E-learning is offered where appropriate.

Typical course participants are engineers, operators, managers and designers.

Our teachers include Atlas Copco employees and external consultants. All are experts in their fields with documented knowledge and many years of experience.

On-site, or at our training centers
Available on a regular basis, or on request, our courses can be held in your plant or at one of our centers, depending on the type of training you need.

More information:

Contact your closest Atlas Copco representative or send a mail to:

worldclasstraining@atlascopco.com

A choice of our courses

Courses:		Ordering No.
Tightening technique	1 - 2 days	9828 0500 01
Power MACS Programming, functions, trouble shooting	1 - 2 days	9828 0540 01
Power Focus Programming, functions, trouble shooting	1 - 2 days	9828 0530 01

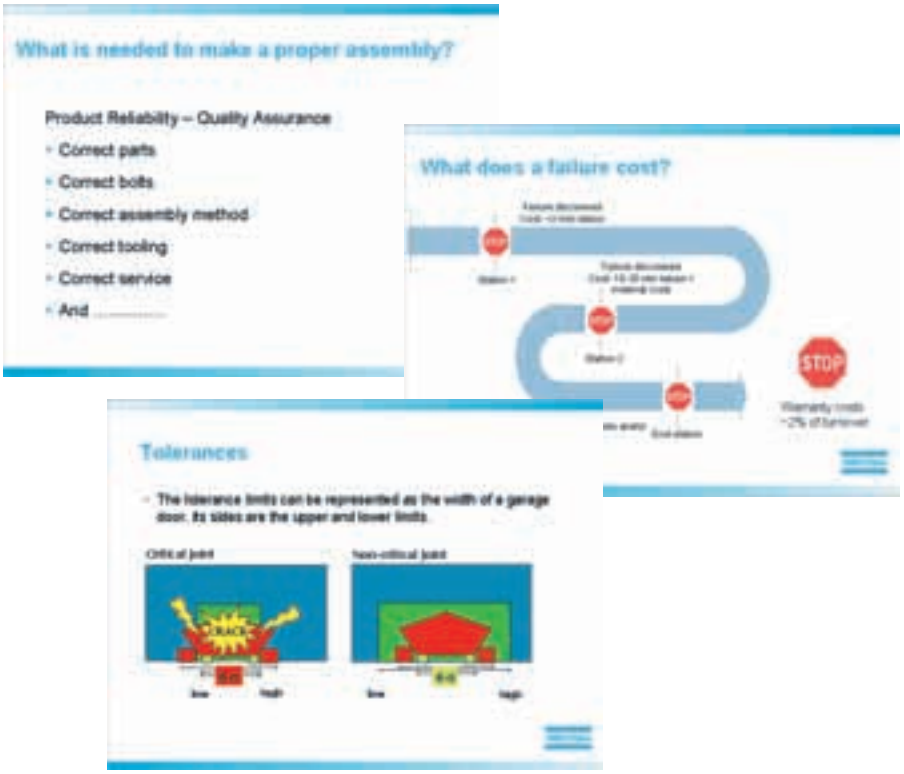

DECLARATION OF NOISE AND VIBRATION EMISSION

Assembly tools

	Noise (according to PN8NTC1.2) (* according to ISO 15744) (** according to EN 50144)			Vibration (according to ISO 8662) (** according to EN 50144)	
	Measured sound pressure level dB(A)	Determined sound power level dB(A)	Spread in method and production dB(A)	Measured vibration value m/s²	Spread in method and production m/s²
Impact Wrenches					
LMS06 SR	86	97	3	3.0	0.7
LMS06 HR	88	99	3	< 2.5	
LMS17 HR	86	96	3	2.5	0.5
LMS27 HR	82	-	3	<2.5	
LMS37 HR	87	98	3	<2.5	
LMS47 HR	88	99	3	4.1	1.5
LMS57 HR	88	99	3	3.2	0.8
LMS61 HR	93	104	3	7.8	1.9
LMS64 GR	94	105	3	7.5	2.0
LMS64 S GR	96	107	3	8.8	2.3
LMS64 HR	94	105	3	8.5	2.5
LMS86 GOR / GIR	99	110	3	9.0	2.5
Impact Wrenches with torque control					
LTS17 HR	80		3	2.5	0.5
LTS27 HR	82		3	<2.5	
LTS37 HR	85		3	<2.5	
LTS57 HR	85		3	5.4	1.2
Screwdrivers with slip clutch – pistol grip models					
TWIST12 HRX	76		3	<2.5 - 5[a]	1.5
TWIST22 HR	74		3	<2.5 - 5.3[a]	1.5
TWIST22 HRX	74		3	<2.5 - 5[a]	1.5
LUF34 HR	79		3	<2.5 - 5.5[a]	1.5
TWIST HRF	74		3	<2.5 - 5.5[a]	1.5
Screwdrivers with slip clutch – straight models					
TWIST12 SR	76		3	<2.5 - 15[a]	
TWIST22 SR	76		3	<2.5 - 15[a]	

[a] Only when ratcheing at max torque setting.
Ratcheing at a lower torque setting implies a lower vibration value.
During run-down the vibration value is below 2.5 m/s².

Screwdrivers with direct drive – pistol grip models					
LUD12 HRX	73		3	<2.5	
LUD22 HR	73		3	<2.5	
LUF34 HRD	79		3	<2.5	
Screwdrivers with air shut-off control – straight models					
LUM10 PR	66		3	<2.5	
LUM12 PR	76		3	<2.5	
LUM22 PR	76		3	<2.5	
LUM12 SR	76		3	<2.5	
LUM22 SR	74		3	<2.5	
Screwdrivers with air shut-off control – pistol grip models					
LUM12 HRX	73		3	<2.5	
LUM12 HRF	73		3	<2.5	
LUM25 HRF-U	73		3	<2.5	
LUM22 HRX	73		3	<2.5	
LUM22 HR	73		3	<2.5	
Screwdrivers with air shut-off control – angle head models					
LTV009 R	76		3	<2.5	
LTV08 R	69		3	<2.5	
LTV18 R	71		3	<2.5	
TWIST VR	72		3	<2.5	
ErgoPulse PTX-HR pistol grip					
EP3PTX5 HR42	73		3	<2.5	
EP4PTX9 HR	75		3	<2.5	
EP5PTX HR	80		3	<2.5	
EP6PTX HR	81		3	<2.5	
EP7PTX55 HR10	81		3	<2.5	
EP8PTX70 HR10	81		3	<2.5	
EP9PTX80 HR13	82		3	<2.5	
EP11PTX120 HR13	83		3	2.8	1.8
EP15PTX250 HR20	86	97	3	6.0	1.8
EP19PTX450 HR20	87	98	3	8.2	2.1
ErgoPulse PTX-SR Trim straight models					
EP3PTX5 SR42	70		3	8.1	3
EP4PTX9 SR10	79		3	5.6	2.7
EP5PTX15 SR10	77		3	5.6	1
EP6PTX19 SR10	80		3	5.3	1.1
EP7PTX31 SR10	78		3	10.8	4.3
EP8PTX45 SR10	80		3	8.0	2.9

	Noise (according to PN8NTC1.2) (* according to ISO 15744) (** according to EN 50144)			Vibration (according to ISO 8662) (** according to EN 50144)	
	Measured sound pressure level dB(A)	Determined sound power level dB(A)	Spread in method and production dB(A)	Measured vibration value m/s²	Spread in method and production m/s²
Ergopulse PTX-SR straight models					
EP3PTX5 SR42	76		3	8.8	4.8
EP4PTX9 SR10	72		3	4.0	1
EP5PTX15 SR10	79		3	6.7	2
EP6PTX19 SR10	79		3	3.9	0.7
EP7PTX31 SR10	80		3	9.5	3.6
EP8PTX45 SR10	80		3	6.7	2.4
Ergopulse PTS-HR pistol grip models					
EP6PTS22 HR10	74		3	<2.5	
EP7PTS35 HR10	77		3	3.0	0.7
EP8PTS55 HR10	77		3	<2.5	
EP10PTS90 HR13	82		3	<2.5	
EP12PTS150 HR13	83		3	3.6	1.3
EP14PTS250 HR20	82		3	5.3	2
EP18PTS450 HR20	84		3	7.6	3
Ergopulse PTS-HR pistol grip Air on top models					
EP7PTS35 HRF10	77		3	2.9	1
EP8PTS55 HRF10	77		3	2.8	0.5
EP10PTS90 HRF13	83		3	2.6	1.3
ErgoPulse PT-HR pistol grip models					
EP5PT HR	74		3	<2.5	
EP6PT HR	74		3	<2.5	
ErgoPulse SR straight models					
EP4C SR42	70		3	<2.5	
EP5C SR42	75		3	<2.5	
EP6C SR42	75		3	<2.5	
EP6XS SR	75		3	<2.5	
EP7XS SR	75		3	<2.5	
EP8XS SR	78		3	<2.5	
ErgoPulse HR pistol grip models					
EP5C HR42	70		3	<2.5	
EP5XS HR42	79		3	<2.5	
EP5CS HR42	70		3	<2.5	
EP6C HR42	70		3	<2.5	
EP6XS HR	78		3	<2.5	
EP6PS HR10	79		3	<2.5	
EP7XS HR	79		3	<2.5	
EP8XS HRX	79		3	3.7	2.9
EP8PS HR10	82		3	<2.5	
EP10C HR13	79		3	<2.5	
EP10XS HR13	78		3	<2.5	
EP12XS HR13	84		3	2.5	1.8
EP14XS HR13	84		3	3.9	3
EP16XS HR20	81		3	5.5	1
EP20XS HR20	80		3	5.8	3.2
Pulsor					
EPP6 M9 HR10	76		3	<2.5	
EPP6 M19 HR10	78		3	<2.5	
EPP6 M25 HR10	81		3	<2.5	
EPP6 M32 HR10	82		3	<2.5	
EPP8 M42 HR10	80		3	<2.5	
EPP8 M55 HR10	80		3	<2.5	
EPP8 M70 HR10	81		3	<2.5	
EPP10 M90 HR13	83		3	<2.5	
EPP11 M120 HR13	83		3	<2.5	
Angle nutrunners					
LTV08 R	69		3	<2.5	
LTV18 R	71		3	<2.5	
LTV28 R	76		3	<2.5	
LTV28XX	80		3	<2.5	
LTV29 R	77		3	<2.5	
LTV38 R	80		3	<2.5	
LTV39 R	78		3	<2.5	
LTV48 R	82		3	<2.5	
LTV46 N	81		3	<2.5	
LTV58 R/N	79		3	<2.5	

DECLARATION OF NOISE AND VIBRATION EMISSION

Material removal tools – Grinders

	Noise (according to PN8NTC1.2) (* according to ISO 15744) (** according to EN 50144)			Vibration (according to ISO 8662) (** according to EN 50144)	
	Measured sound pressure level dB(A)	Determined sound power level dB(A)	Spread in method and production dB(A)	Measured vibration value m/s²	Spread in method and production m/s²
Electric Grinder – Brazor					
ESVG71 F085-18	81**		3	2.8**	0.2**
Turbine Grinders					
GTG21 F085-18	74*		3	<2.5	
GTG21 F120-13	74*		3	<2.5	
GTG21 S085	76*		3	2.9	1.7
GTG40 F085-18	85		3	<2.5	
GTG40 F066-23	85		3	<2.5	
GTG40 S060-C15	85		3	<2.5	
GTG40 S060	85		3	<2.5	
GTR40 S085-15	85		3	<2.5	
GTR40 S072-13	85		3	<2.5	
GTR40 S060	85		3	<2.5	
Die Grinders – straight models					
LSF07 S850	79		3	<2.5	
LSF28 S250-1R	83		3	<2.5	
LSF28 S180-1R	74		3	<2.5	
LSF28 S250E-1	83		3	<2.5	
LSF28 S250E-1R	83		3	<2.5	
LSF28 S180E-1	74		3	<2.5	
LSF38 S180E-01	85*	96	3	<2.5	
LSF38 S250E-01	89*	100	3	<2.5	
Angle Die Grinders					
LSV18 S200-1	76		3	<2.5	
LSV28 S150	77		3	3.6	0.3
Die Grinders for polishing					
LSF28 ST070	80		3	3.5	0.2
LSF28 ST070E	80		3	4.2	0.6
LSF28 ST030-LF	76		3	<2.5	
Straight Grinders – for cone wheels and plugs					
LSR28 S120-CW	70		3	<2.5	
LSR28 S150-CW	71		3	3.5	2.9
LSR48 S150-CW	84		3	2.7	0.4
LSR48 S120-CW	81		3	2.9	0.6
LSR48 S090-CW	82		3	3.7	0.5
Straight Grinders – for straight wheels					
LSR28 S180-05	74		3	<2.5	
LSR28 S150-10	71		3	<2.5	
LSR48 S150-10	84		3	2.8	1.3
LSR48 S120-08	80		3	2.5	0.7
LSR48 S120-08R	80		3	2.5	0.7
LSR48 S120-13	80		3	<2.5	
LSR48 S120-10	80		3	2.9	0.9
LSR48 S090-10	84		3	<2.5	
LSR48 S090-10R	84		3	<2.5	
LSR64 S100-15	88	99	3	5.5	1.3
LSR64 S072-13	84		3	2.9	0.8
LSR64 S060-15	82		3	3.0	0.8
The sound pressure level for LSR64 can be reduced by 8-12 dB(A), using a silencer (optional).					
Vertical Grinders – for depressed centre, cut-off and cup wheels					
LSS53 S120-13	80		3	3.4	0.8
LSS53 S085-18	79		3	3.2	0.8
LSS53 S072-C13	77		3	3.2	0.8
LSS64 S085-18	86	97	3	5.2	1.2
LSS64 S060-C15	82		3	4.2	1.0
LSS84 S060-23	88	99	3	4.4	1.2

	Noise (according to PN8NTC1.2) (* according to ISO 15744) (** according to EN 50144)			Vibration (according to ISO 8662) (** according to EN 50144)	
	Measured sound pressure level dB(A)	Determined sound power level dB(A)	Spread in method and production dB(A)	Measured vibration value m/s²	Spread in method and production m/s²
Angle Grinders – for depressed centre, cut-off and cup wheels					
LSV18 S170-08	76		3	<2.5	
LSV38 SA12-125	84		3	<2.5	
LSV38 ST12-125	83		3	2.6[a] (4.4[b])	0.4[a]
LSV48 SA120	89	100	3	<2.5	
LSV48 SA085	88	99	3	<2.5	
LSV48 SA066	89	99	3	<2.5	
[a] Measured on the throttle handle. [b] Measured on the support handle.					
Angle Sanders – for sanding and polishing					
LSV18 S200-1/B	76		3	<2.5	
LSV18 S200-M/B	76		3	<2.5	
LSV18 S120-1/B	76		3	<2.5	
LSV18 S120-M/B	76		3	<2.5	
LSV18 S080-1/B	70		3	<2.5	
LSV18 S080-M/B	70		3	<2.5	
LSV28 S060	74		3	<2.5	
LSV28 S060-M14	74		3	<2.5	
LSV28 S040	76		3	<2.5	
LSV28 ST034	77		3	<2.5	
LSV28 S021	70		3	<2.5	
LSV28 S021-M14	70		3	<2.5	
LSV28 ST018	82		3	<2.5	
LSV28 ST018-01	82		3	<2.5	
LSV28 ST018-01-M14	82		3	<2.5	
LSV28 S060-01	74		3	3.5	2.1
LSV28 S060-01-M14	74		3	3.5	2.1
LSV28 S040-01-M14	76		3	<2.5	
LSV28 ST013-LF	77		3	<2.5	
LSV28 ST013-M14-LF	77		3	<2.5	
LSV28 ST008-01-LF	74		3	<2.5	
LSV38 S066	78*		3	2.5	0.6
LSV38 S085	81*		3	3.0	1.0
Orbital Sanders – LSO					
LSO30 S070-3	80		3	<2.5	
LSO30 H070-3	81		3	<2.5	
LSO31 S070-3	82		3	<2.5	
LSO31 H070-3	81		3	<2.5	
LSO32 S070-3	78		3	<2.5	
LSO32 H070-3	79		3	<2.5	
Random Orbital Sanders – LST					
LST30 H090-11	81		3	<2.5	
LST30 H090-15	81		3	<2.5	
LST30 S090-15	80		3	<2.5	
LST31 H090-15	84		3	<2.5	
LST31 S090-15	82		3	<2.5	
LST32 H090-15	82		3	<2.5	
LST32 S090-15	82		3	<2.5	
LST20 R350	76		3	<2.5	
LST20 R550	76		3	<2.5	
LST20 R650	76		3	<2.5	
LST20 R325	76		3	<2.5	
LST20 R525	76		3	<2.5	
LST20 R625	76		3	<2.5	
LST21 R350	85		3	<2.5	
LST21 R550	85		3	<2.5	
LST21 R650	85		3	<2.5	
LST21 R325	85		3	<2.5	
LST21 R525	85		3	<2.5	
LST21 R625	85		3	<2.5	
LST22 R350	78		3	<2.5	
LST22 R550	78		3	<2.5	
LST22 R650	78		3	<2.5	
LST22 R325	78		3	<2.5	
LST22 R525	78		3	<2.5	
LST22 R625	78		3	<2.5	

DECLARATION OF NOISE AND VIBRATION EMISSION

Material removal tools – Percussive tools

	Noise (according to PN8NTC1.2) (* according to ISO 15744) (** according to EN 50144)			Vibration (according to ISO 8662) (** according to EN 50144)		
	Measured sound pressure level dB(A)	Determined sound power level dB(A)	Spread in method and production dB(A)	Measured vibration value m/s²	Spread in method and production m/s²	Optimal feed force N
Chipping Hammers – vibration damped						
RRF21-01	93	106	3	2.5	0.5	80-140
RRF31-01	94	107	3	3.5	2.0	80-160
RRD37-11	89	102	3	<2.5		120-220
RRD37-12	89	102	3	<2.5		120-220
RRD57-11	91	104	3	<2.5		160-240
RRD57-12	91	104	3	<2.5		160-240
Chipping Hammers – conventional type						
RRC22F-01	98	111	3	4.0	0.9	
RRC22F-02	98	111	3	4.0	0.9	
RRC34B-01	98	111	3	7.0	1.7	
RRC34B-02	98	111	3	7.0	1.7	
Scalers						
RVM07	72		3	<2.5		
Chipping Hammer / Scaler						
RRC13	95	108	3	4.6	0.4	
RRC13B	95	108	3	4.6	0.4	
Needle scaler – conventional type						
RRC13N	91	104	3	4.9	0.6	

	Noise (according to PN8NTC1.2) (* according to ISO 15744) (** according to EN 50144)			Vibration (according to ISO 8662) (** according to EN 50144)		
	Measured sound pressure level dB(A)	Determined sound power level dB(A)	Spread in method and production dB(A)	Measured vibration value m/s²	Spread in method and production m/s²	Optimal feed force N
Rust and Weld Scalers						
RP1	90	103	3	11	3	
RP3	98	111	3	11	3	
Riveting Hammers – vibration damped						
RRH04P-01	93	106	3	<2.5		80-160
RRH04P-02	93	106	3	<2.5		80-160
RRH04P-12	93	106	3	<2.5		80-160
RRH06P	91	104	3	<2.5		100-180
RRH08P	91	104	3	<2.5		120-200
RRH10P	89	102	3	<2.5		120-220
RRH12P	89	102	3	<2.5		120-240
Riveting Hammers – conventional type						
RRN11P-01	98	111	3	7.8	2.1	
RRN11P-02	98	111	3	7.8	2.1	
Rammers						
RAM06	92	105	3	22	6	
RAM12	85		3	45	15	
RAM20A	99	112	3	37	11	

Material removal tools – Drills

	Noise (according to PN8NTC1.2) (* according to ISO 15744) (** according to EN 50144)			Vibration (according to ISO 8662) (** according to EN 50144)	
	Measured sound pressure level dB(A)	Determined sound power level dB(A)	Spread in method and production dB(A)	Measured vibration value m/s²	Spread in method and production m/s²
Pistol grip Drills					
LBB16 EP-200	75		3	<2.5	
LBB16 EPX-200	78		3	<2.5	
LBB16 EP-060	75		3	<2.5	
LBB16 EPX-060	78		3	<2.5	
LBB16 EP-045	75		3	<2.5	
LBB16 EPX-045	78		3	<2.5	
LBB16 EP-033	75		3	<2.5	
LBB16 EPX-033	78		3	<2.5	
LBB16 EP-024	75		3	<2.5	
LBB16 EPX-024	78		3	<2.5	
LBB16 EP-010	75		3	<2.5	
LBB16 EPX-010	78		3	<2.5	
LBB16 EP-005	75		3	<2.5	
LBB16 EPX-005	78		3	<2.5	
LBB16 EP-003	75		3	<2.5	
LBB26 EPX-033	80		3	<2.5	
LBB26 EPX-060	80		3	<2.5	
LBB26 EPX-045	80		3	<2.5	
LBB26 EPX-026	80		3	<2.5	
LBB26 EPX-013	80		3	<2.5	
LBB26 EPX-007	80		3	<2.5	
LBB26 EPX-005	80		3	<2.5	
LBB26 EPX-003	80		3	<2.5	
LBB36 H200	81		3	<2.5	
LBB36 H060	81		3	<2.5	
LBB36 H033	81		3	<2.5	
LBB36 H026	81		3	<2.5	
LBB36 H013	81		3	<2.5	
LBB36 H007	81		3	<2.5	
LBB36 H005	81		3	<2.5	

	Noise (according to PN8NTC1.2) (* according to ISO 15744) (** according to EN 50144)			Vibration (according to ISO 8662) (** according to EN 50144)	
	Measured sound pressure level dB(A)	Determined sound power level dB(A)	Spread in method and production dB(A)	Measured vibration value m/s²	Spread in method and production m/s²
Pistol grip Drills					
LBB45 H017[a]	85*		3	<2.5	
LBB45 H006[a]	85*		3	<2.5	
LBB45 H004[a]	85*		3	<2.5	
COMBI22 HR2	75		3	<2.5	
COMBI22 HR5	75		3	<2.5	
COMBI22 HR10	75		3	<2.5	
COMBI34 HR16	79		3	<2.5	
COMBI34 HR08	79		3	<2.5	
COMBI34 HR04	79		3	<2.5	
Micro Stop Drills					
LBS24 H045-40M	74		3	<2.5	
LBS24 H045-40	74		3	<2.5	
LBS24 H010-40M	73		3	<2.5	
LBS24 H010-40	73		3	<2.5	
LBS36 H033-40	81		3	<2.5	
LBS36 H013-40	81		3	<2.5	
Straight Drills					
LBB24 S200B	75		3	<2.5	
LBB24 S060B	75		3	<2.5	
LBB24 S045B	75		3	<2.5	
LBB24 S033B	75		3	<2.5	
LBB24 S020B	75		3	<2.5	
LBB34 S060	88	101	3	<2.5	
LBB34 S026	88	101	3	<2.5	
LBB34 S013	87	100	3	<2.5	

[a] The sound pressure level for LBB45 can be reduced by 6 dB(A), using a silencer (optional).

DECLARATION OF NOISE AND VIBRATION EMISSION

Material removal tools – Drills

	Noise (according to PN8NTC1.2) (* according to ISO 15744) (** according to EN 50144)			Vibration (according to ISO 8662) (** according to EN 50144)	
	Measured sound pressure level dB(A)	Determi-ned sound power level dB(A)	Spread in method and pro-duction dB(A)	Measured vibration value m/s²	Spread in method and pro-duction m/s²
Angle Drills					
LBV11 S027-S30	73		3	<2.5	
LBV11 S025-S90	73		3	<2.5	
LBV16 032	74		3	<2.5	
LBV16 045-32	74		3	<2.5	
LBV16 045-90	74		3	<2.5	
LBV16 045-92	74		3	<2.5	
LBV16 055-90	74		3	<2.5	
LBV16-055-92	74		3	<2.5	
LBV16 055-S92	74		3	<2.5	
LBV16 032-92Z	74		3	<2.5	
LBV16 055-90Z	74		3	<2.5	
LBV16 055-92Z	74		3	<2.5	
LBV16 018-11	74		3	<2.5	
LBV34 S040	88	101	3	<2.5	
LBV34 S010	88	101	3	<2.5	
LBV34 S005	87	100	3	<2.5	
LBV36 S030-30	82		3	<2.5	
LBV36 S030-S30	82		3	<2.5	
LBV36 S045-30	82		3	<2.5	
LBV36 S045-S30	82		3	<2.5	
LBV36 S030-90	82		3	<2.5	
LBV36 S030-S90	82		3	<2.5	
LBV36 S045-90	82		3	<2.5	
LBV36 S045-S90	82		3	<2.5	
LBV36 S030-92	82		3	<2.5	
LBV36 S030-S92	82		3	<2.5	
LBV36 S045-92	82		3	<2.5	
LBV36 S045-S92	82		3	<2.5	
LBV36 S030-91	82		3	<2.5	
LBV36 S060-91	82		3	<2.5	
LBV36 S030-93	82		3	<2.5	
LBV36 S060-93	82		3	<2.5	
Screw-feed Drills					
RAB9 VR006	92	105	3	<2.5	
RAB9 VR003	94	107	3	<2.5	
RAB12 L450	103	116	3	<2.5	
RAB12 L250	105	118	3	<2.5	
RAB12 L150	99	112	3	<2.5	
Tappers					
LGB24 H007	75		3	<2.5	
LGB24 H007Q	75		3	<2.5	
LGB24 HF007	75		3	<2.5	
LGB24 HF007Q	75		3	<2.5	
LGB24 S007	80		3	<2.5	
LGB34 H007	77		3	<2.5	
LGB34 H007Q	77		3	<2.5	
LGB34 S007	87	100	3	<2.5	
LGB36 H007Q	83		3	<2.5	

TOOL DESIGNATIONS

BAL – Ball valve
BLM 5000 – Data Analyzers
BLM TPT – Torque preload transducer
BLOCK – Blow protector
BTD – Battery screwdriver, shut-off type, in-line
BTV – Battery screwdriver, shut-off type, right angle

CABLAIR – CABLAIR hose
CLAW – Claw coupling
COL – Colibri balancer
COMBI – Pneumatic screwdriver, direct drive
COMBI – Pistol grip drill

DIM – Air preparation unit, lubricator
DOS – Direct lubricator unit

EBL – Electric screwdriver, brushless clutch type
ELI – Electric screwdriver, ELIZA
EP C/X/XS – Hydraulic impulse nutrunner, non shut-off, ERGOPULSE
EP PT/PTS/PTX – Hydraulic impulse nutrunner, shut-off, ERGOPULSE
EPP – Monitoring impulse nutrunner, PULSOR
ErgoGUN – Blow gun
ErgoNIP – Nipple
ErgoQIC – Quick coupling
ESV – Electric grinder, BRAZOR
ETB – Battery screwdriver, pistol grip
ETC DS – Electric nutrunner, shut-off type, crowfoot, TENSOR DS
ETC S – Electric nutrunner, shut-off type, crowfoot, TENSOR S
ETD DL – Electric screwdriver, shut-off type, in-line, TENSOR DL
ETD DS – Electric nutrunner, shut-off type, in-line, TENSOR DS
ETD M – Electric screwdriver, hand-held "Digitork, MicroTorque
ETD S – Electric nutrunner, shut-off type, in-line, TENSOR S
ETD ST – Electric nutrunner, shut-off type, in-line, TENSOR ST
ETF DL – Electric screwdriver, shut-off type, fixture, TENSOR DL
ETF M – Electric screwdriver, fixtured "Digitork", MicroTorque
ETF MT – Electric screwdriver, fixtured transducerized, MicroTorque
ETF SL – Electric screwdriver, shut-off type, fixture, TENSOR SL
ETO DS – Electric nutrunner, shut-off type, open end, TENSOR DS
ETO S – Electric nutrunner, shut-off type, open end, TENSOR S
ETP DL – Electric screwdriver, shut-off type, pistol grip, TENSOR DL
ETP DS – Electric nutrunner, shut-off type, pistol grip, TENSOR DS
ETP S – Electric nutrunner, shut-off type, pistol grip, TENSOR S
ETP SL – Electric screwdriver, shut-off type, pistol grip, TENSOR SL
ETP ST – Electric nutrunner, shut-off type, pistol grip, TENSOR ST
ETV DL – Electric screwdriver, shut-off type, right angle, TENSOR DL
ETV DS – Electric nutrunner, shut-off type, right angle, TENSOR DS
ETV S – Electric nutrunner, shut-off type, right angle, TENSOR S
ETV ST – Electric nutrunner, shut-off type, right angle, TENSOR ST
ETX – Fixtured electric nutrunner, shut-off type

FIL – Air preparation unit, filter

GTG – Turbo grinder
GTR – Straight turbo grinder
GUN – Blow gun

HM – Hose reel
HRIL – Hose reel
HT – Torque testers

IRTT – In–line rotary torque and torque/angle transducer

JSB – Testbenches

LAB – LABwrench
LBB – Pistol grip and straight drill
LBL – Automatic drilling and tapping unit
LBR – Pneumatic nutrunner, stall type, ratchet wrenches
LBS – Micro stop drill
LBV – Angle drill
LCS – Circular cutters
LGB – Tapper
LINE – LINEwrench

LLA – Air hoist
LLT – Trolley
LMD – Pneumatic nutrunner, stall type, in-line
LMK – Pneumatic nutrunner, stall type, worm drive
LMP – Pneumatic nutrunner, stall type, pistol grip
LMPV – Pneumatic nutrunner, stall type, pistol grip, right angle
LMS – Impact wrenches, non shut-off type
LMV – Pneumatic nutrunner, stall type, right angle
LPN – Nibbler
LSF – Die grinder
LSK – Routers
LSO – Orbital sander
LSR – Straight grinder
LSS – Vertical grinder and sander
LST – Random orbital sander
LSV – Angle grinder and sander
LTC – Pneumatic nutrunner, shut-off type, crowfoot
LTD – Pneumatic nutrunner, shut-off type, in-line
LTO – Pneumatic nutrunner, shut-off type, tube nut
LTP – Pneumatic nutrunner, shut-off type, pistol grip
LTPV – Pneumatic nutrunner, shut-off type, pistol grip, right angle
LTS – Impact wrenches, shut-off type
LTV – Pneumatic screwdriver, shut-off angle tool
LTV – Pneumatic nutrunner, shut-off type, right angle
LUD – Pneumatic screwdriver, direct drive
LUF – Pneumatic screwdriver, slip-clutch
LUM – Pneumatic screwdriver, shut-off clutch
LZB – Small vane air motor
LZL – Vane air motor

MRTT – Manual screwdriver/wrench torque transducer
MT TH – Torque In/Line rotary transducer
MT TR – Torque&Angle In/Line rotary transducer
MT TRA – Stationary torque transducer
MT TS – Manual screwdriver torque transducer

NIP – Nipple

POLUR – Polyurethane hose
PVC – PVC hose

QIC – Quick coupling
QMX – Fixtured electric nutrunner, shut-off type
QRTT – Transducer for spindle and fixtured tool calibration
QST – Fixtured electric nutrunner, shut-off type

RAB – Screw-feed drill
RAM – Rammer
RBB – Bucking bar, vibration damped
REG – Air preparation unit, regulator
RIL – Balancer
RP – Rust and weld scaler
RRC – Chipping hammer, conventional type
RRD – Chipping hammer, vibration damped
RRF – Chipping hammer, vibration damped
RRH – Riveting hammers, vibration damped
RRN – Riveting hammer, conventional type
RUBAIR – Rubber hose
RVM – Scaler, vibration damped

SM – Torque arm, parallel
SML – Torque arm, linear
SPI – Spiral hose
SRTT – Static reaction torque transducer

TLT – Trolley
TT – Torque testers
TURBO – Rubber hose
TWIST – Pneumatic screwdriver, slip-clutch

NOTES

NOTES

NOTES

NOTES

Committed to your superior productivity

9837 3000 01 Printed in Sweden. Strokirk-Landströms, 2008:1 Subject to alteration without prior notice.

Atlas Copco

www.atlascopco.com